1. BOMBA DE CAPTAÇÃO

Nome da empresa:	VBA CONSULTORES
Criado por:	-
Telefone:	-
Faxe:	-
Data:	29/09/2006

Projecto:	USINA DE DESSALINIZAÇÃO DE ÁGUA DO MAR DO PECÉM	**Cliente:**	SRH / COGERH
Referência Número:	-	**Núnero de Cliente:**	-
		Contacto:	-

Posição	*Qte.*	*Descrição*	*Preço unitário*
	1	**SP 46-3R**	A pedido

Nota! A imagem do produto pode diferir do produto actual

Código: 15DV3603
Electrobomba submersivel própria para o abastecimento de água potável, sistemas de rega, rebaixamento de água subterranea, pressurização e diversas aplicações industriais.

Electrobomba totalmente concebida em Aço inoxidável DIN W.-Nr. 1.4539 DIN W.-Nr., própria tanto para instalação vertical como horizontal.
A bomba incorpora uma válvula de retenção.

A electrobomba possui um motor submersivel 3-fásico, encapsolado com protecção contra areias, chumaceiras lubrificadas pelo próprio liquido e diafragma de equalização de pressão.

Líquido:

T Máx. líquido a 0.15 m/s:	40 °C

Características técnicas:

Velocidade no ponto requerido:	3450 rpm
Caudal nominal:	55 m³/h
Altura nominal:	36 m
Concebido p/ o seguinte nº de	
Tipo do empanque do motor:	SIC/SIC
Homologações na placa de	
Homologações na placa de identif.	
Homologações na placa de identif.	

Materiais:

Material da bomba:	Aço inoxidável 1.4539 DIN W.-Nr. 904 L AISI
Material do impulsor:	Aço inoxidável 1.4539 DIN W.-Nr. 904 L AISI

Posição	*Qte.*	*Descrição*	*Preço unitário*
		Material do motor: Aço inoxidável 1.4539 DIN W.-Nr. 904 L AISI	
		Instalação:	
		Temp. ambiente mí-	
		Temp. ambiente má-	
		Líquido a uma temp. amb. máx.	
		Pressão máx. a uma temp.	
		Pressão máx. a uma temp.	
		Diâmetro da compressão: Rp 4	
		Pressão de serviço, lig. à	
		Nível de entrada,ligaçao da	
		Diâmetro do motor: 6 inch	
		Profundidade máxima de	
		Número de guias de	
		Número de grampos de	
		Dimensão das porcas	
		Dimensões das peças de	
		Características eléctricas:	
		Tipo de motor: MS6000	
		Potência de entrada (P1):	
		Potência de entrada à velocidade 1-2-3:	
		Potência nominal (P2): 7.5 kW	
		Frequência: 60 Hz	
		Tipo de arranque: Directo online	
		Corrente nominal: 17,4-17,0-17,0 A	
		Factor de serviço: 1,15	
		Corrente na velocidade 1-2-3:	
		Corrente de arranque na velocidade 1-2-3:	
		Factor de potência - Cos phi: 0,84-0,82-0,78	
		Velocidade nominal: 3440-3450-3470 rpm	
		Capacidade do condensador -	
		Capacidade do condensador -	
		Classe de protecção (IEC 34-5): IP58	
		Classe de isolamento (IEC 85): F	
		Sensor de temperatura incorporado: sim	
		Outros:	
		Peso líquido: 49 kg	
		Peso bruto: 61 kg	
		Volume: 0.1 m³	

Nome da empresa:	VBA CONSULTORES
Criado por:	-
Telefone:	-
Faxe:	-
Data:	29/09/2006

Projecto:	USINA DE DESSALINIZAÇÃO DE ÁGUA DO MAR DO PECÉM	**Cliente:**	SRH / COGERH
Referência Número:	-	**Núnero de Cliente:**	-
Posição:		**Contacto:**	-

15DV3603 SP 46-3R

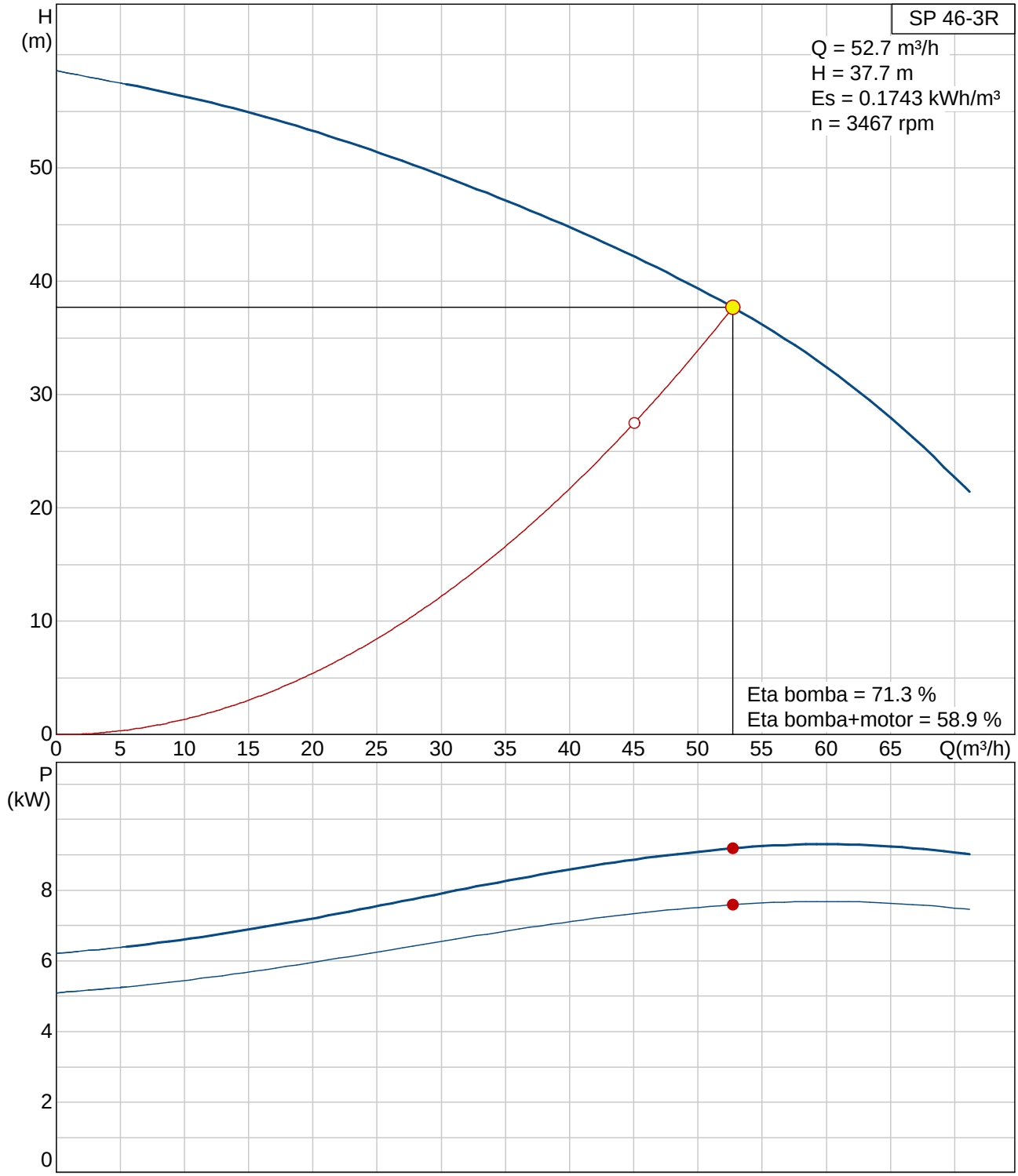

Nome da empresa:	VBA CONSULTORES
Criado por:	-
Telefone:	-
Faxe:	-
Data:	29/09/2006

Projecto:	USINA DE DESSALINIZAÇÃO DE ÁGUA DO MAR DO PECÉM	**Cliente:**	SRH / COGERH
Referência Número:	-	**Núnero de Cliente:**	-
Posição:		**Contacto:**	-

Descrição	Valor
Modelo do produto:	SP 46-3R
Código:	15DV3603
Número EAN:	5700391899225
Líquido:	
T Máx. líquido a 0.15 m/s:	40 °C
Características técnicas:	
Velocidade no ponto requerido:	3450 rpm
Caudal nominal:	55 m³/h
Altura nominal:	36 m
Concebido p/ o seguinte nº de	
Tipo do empanque do motor:	SIC/SIC
Materiais:	
Material da bomba:	Aço inoxidável
	1.4539 DIN W.-Nr.
	904 L AISI
Material do impulsor:	Aço inoxidável
	1.4539 DIN W.-Nr.
	904 L AISI
Material do motor:	Aço inoxidável
	1.4539 DIN W.-Nr.
	904 L AISI
Pressão máx. a uma temp.	
Diâmetro da compressão:	Rp 4
Nível de entrada,ligaçao da	
Diâmetro do motor:	6 inch
Características eléctricas:	
Tipo de motor:	MS6000
Potência de entrada à velocidade 1-2-3:	
Potência nominal (P2):	7.5 kW
Frequência:	60 Hz
Tipo de arranque:	Directo online
Corrente nominal:	17,4-17,0-17,0 A
Factor de serviço:	1,15
Corrente de arranque na velocidade 1-2-3:	
Factor de potência - Cos phi:	0,84-0,82-0,78
Velocidade nominal:	3440-3450-3470 rpm
Capacidade do condensador -	
Classe de protecção (IEC 34-5):	IP58
Classe de isolamento (IEC 85):	F
Sensor de temperatura incorporado:	sim
Outros:	
Peso líquido:	49 kg
Peso bruto:	61 kg
Volume:	0.1 m³

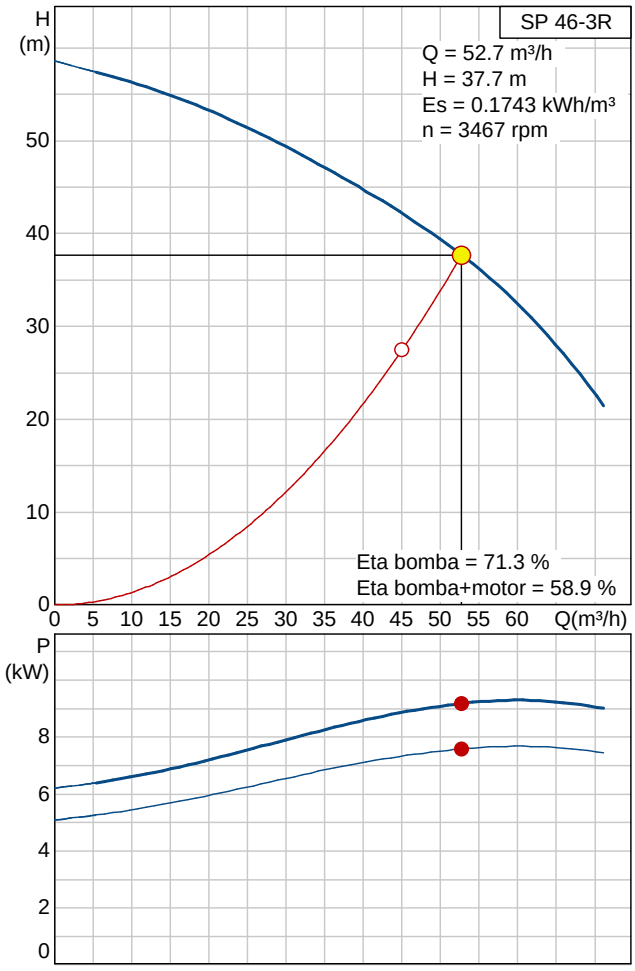

Nome da empresa:	VBA CONSULTORES
Criado por:	-
Telefone:	-
Faxe:	-
Data:	29/09/2006

Projecto:	USINA DE DESSALINIZAÇÃO DE ÁGUA DO MAR DO PECÉM	**Cliente:**	SRH / COGERH
Referência Número:	-	**Núnero de Cliente:**	-
Posição:		**Contacto:**	-

15DV3603 SP 46-3R

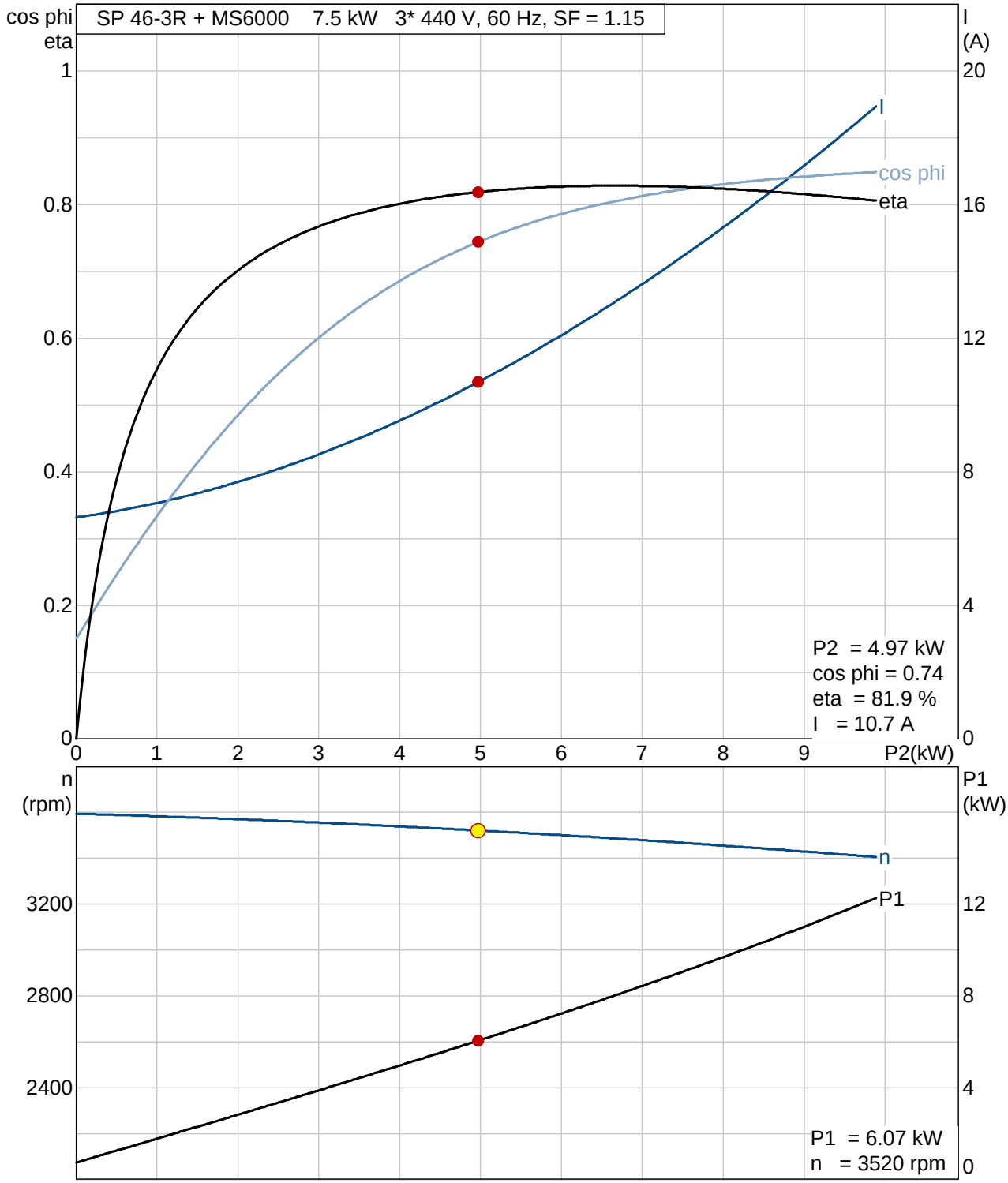

Nome da empresa:	VBA CONSULTORES
Criado por:	-
Telefone:	-
Faxe:	-
Data:	29/09/2006

Projecto:	USINA DE DESSALINIZAÇÃO DE ÁGUA DO MAR DO PECÉM	**Cliente:**	SRH / COGERH
Referência Número:	-	**Núnero de Cliente:**	-
Posição:		**Contacto:**	-

15DV3603 SP 46-3R

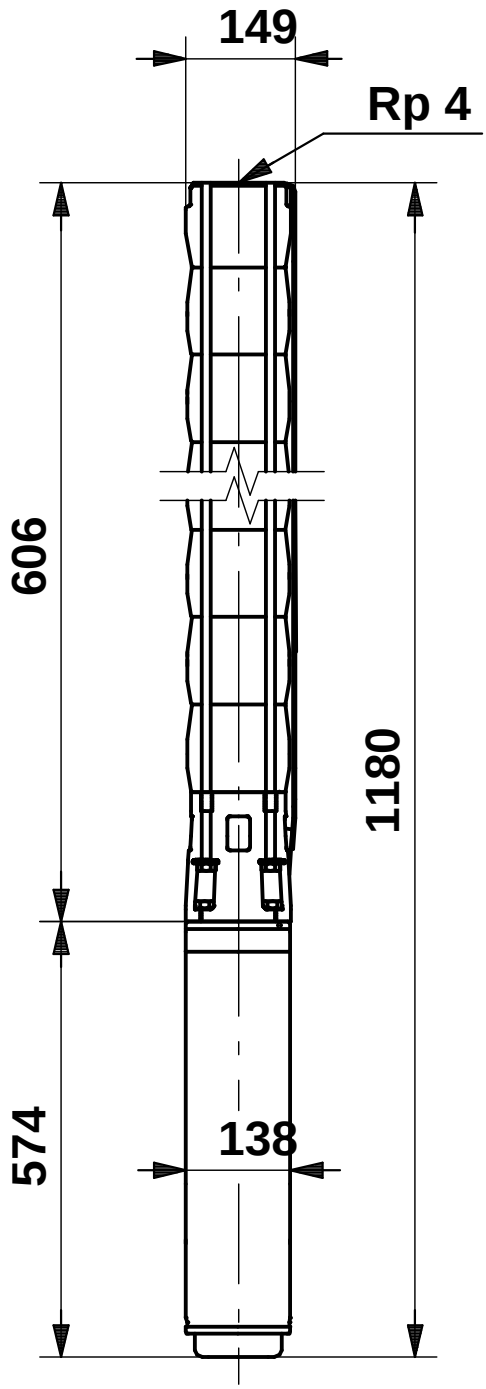

Nota! Todas as unidades estão em (mm) salvo se outra expressa.

Nome da empresa:	VBA CONSULTORES
Criado por:	-
Telefone:	-
Faxe:	-
Data:	29/09/2006

Projecto:	USINA DE DESSALINIZAÇÃO DE ÁGUA DO MAR DO PECÉM	**Cliente:**	SRH / COGERH
Referência Número:	-	**Núnero de Cliente:**	-
Posição:		**Contacto:**	-

15DV3603 SP 46-3R

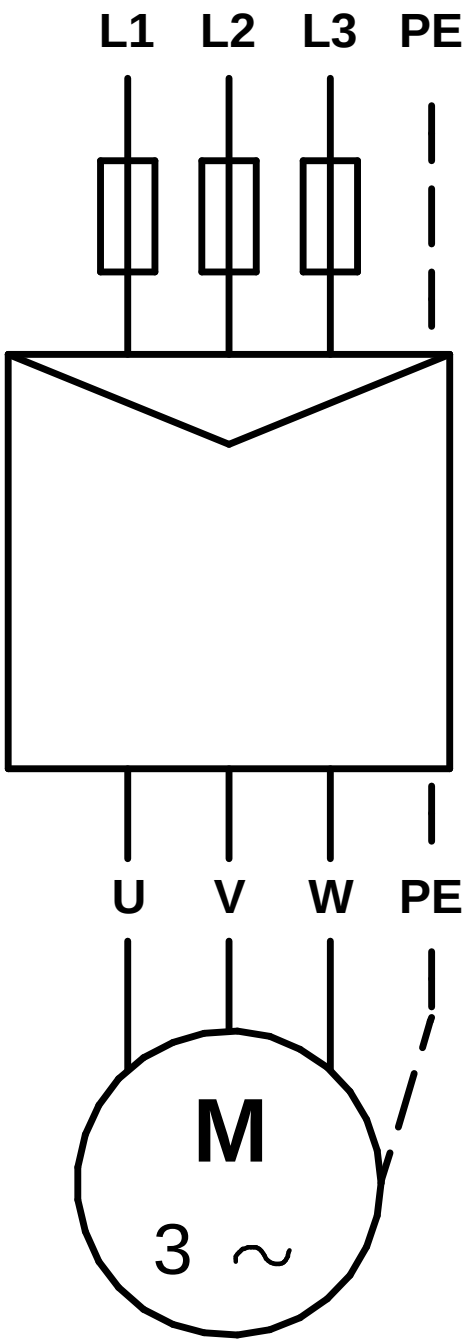

Nota! Todas as unidades estão em (mm) salvo se outra expressa.

GRUNDFOS **INSTRUCTIONS**

SP

Installation and operating instructions

GB D F I E P GR NL S FIN DK

BE > THINK > INNOVATE >

GRUNDFOS

(GB) Declaration of Conformity

We **Grundfos** declare under our sole responsibility that the products **SP**, to which this declaration relates, are in conformity with the Council Directives on the approximation of the laws of the EC Member States relating to

— Machinery (98/37/EC).
Standard used: EN ISO 12100.

— Electromagnetic compatibility (89/336/EEC).
Standards used: EN 61000-6-2 and EN 61000-6-3.

— Electrical equipment designed for use within certain voltage limits (73/23/EEC) [95].
Standards used: EN 60335-1: 2002 and EN 60335-2-41: 2003.

(D) Konformitätserklärung

Wir **Grundfos** erklären in alleiniger Verantwortung, dass die Produkte **SP**, auf die sich diese Erklärung bezieht, mit den folgenden Richtlinien des Rates zur Angleichung der Rechtsvorschriften der EG-Mitgliedstaaten übereinstimmen:

— Maschinen (98/37/EG).
Norm, die verwendet wurde: EN ISO 12100.

— Elektromagnetische Verträglichkeit (89/336/EWG).
Normen, die verwendet wurden: EN 61000-6-2 und EN 61000-6-3.

— Elektrische Betriebsmittel zur Verwendung innerhalb bestimmter Spannungsgrenzen (73/23/EWG) [95].
Normen, die verwendet wurden: EN 60335-1: 2002 und EN 60335-2-41: 2003.

(F) Déclaration de Conformité

Nous **Grundfos** déclarons sous notre seule responsabilité que les produits **SP** auxquels se réfère cette déclaration sont conformes aux Directives du Conseil concernant le rapprochement des législations des Etats membres CE relatives à

— Machines (98/37/CE).
Standard utilisé: EN ISO 12100.

— Compatibilité électromagnétique (89/336/CEE).
Standards utilisés: EN 61000-6-2 et EN 61000-6-3.

— Matériel électrique destiné à employer dans certaines limites de tension (73/23/CEE) [95].
Standards utilisés: EN 60335-1: 2002 et EN 60335-2-41: 2003.

(I) Dichiarazione di Conformità

Noi **Grundfos** dichiariamo sotto la nostra esclusiva responsabilità che i prodotti **SP** ai quali questa dichiarazione se riferisce sono conformi alle Direttive del Consiglio concernente il ravvicinamento delle legislazioni degli Stati membri CE relative a

— Macchine (98/37/CE).
Standard usato: EN ISO 12100.

— Compatibilità elettromagnetica (89/336/CEE).
Standard usati: EN 61000-6-2 e EN 61000-6-3.

— Materiale elettrico destinato ad essere utilizzato entro certi limiti di tensione (73/23/CEE) [95].
Standard usati: EN 60335-1: 2002 e EN 60335-2-41: 2003.

(E) Declaración de Conformidad

Nosotros **Grundfos** declaramos bajo nuestra única responsabilidad que los productos **SP** a los cuales se refiere esta declaración son conformes con las Directivas del Consejo relativas a la aproximación de las legislaciones de los Estados Miembros de la CE sobre

— Máquinas (98/37/CE).
Norma aplicada: EN ISO 12100.

— Compatibilidad electromagnética (89/336/CEE).
Normas aplicadas: EN 61000-6-2 y EN 61000-6-3.

— Material eléctrico destinado a utilizarse con determinadas límites de tensión (73/23/CEE) [95].
Normas aplicadas: EN 60335-1: 2002 y EN 60335-2-41: 2003.

(P) Declaração de Conformidade

Nós **Grundfos** declaramos sob nossa única responsabilidade que os produtos **SP** aos quais se refere esta declaração estão em conformidade com as Directivas do Conselho das Comunidades Europeias relativas à aproximação das legislações dos Estados Membros respeitantes à

— Máquinas (98/37/CE).
Norma utilizada: EN ISO 12100.

— Compatibilidade electromagnética (89/336/CEE).
Normas utilizadas: EN 61000-6-2 e EN 61000-6-3.

— Material eléctrico destinado a ser utilizado dentro de certos limites de tensão (73/23/CEE) [95].
Normas utilizadas: EN 60335-1: 2002 e EN 60335-2-41: 2003.

(GR) Δήλωση Συμμόρφωσης

Εμείς η **Grundfos** δηλώνουμε με αποκλειστικά δική μας ευθύνη ότι τα προιόντα **SP** συμμορφώνονται με την Οδηγία του Συμβουλίου επί της σύγκλισης των νόμων των Κρατών Μελών της Ευρωπαικής Ενωσης σε σχέση με τα

— Μηχανήματα (98/37/EC).
Πρότυπο που χρησιμοποιήθηκε: EN ISO 12100.

— Ηλεκτρομαγνητική συμβατότητα (89/336/EEC).
Πρότυπα που χρησιμοποιήθηκαν: EN 61000-6-2 και EN 61000-6-3.

— Ηλεκτρικές συσκευές σχεδιασμένες γιά χρήση εντός ορισμένων ορίων ηλεκτρικής τάσης (73/23/EEC) [95].
Πρότυπα που χρησιμοποιήθηκαν: EN 60335-1: 2002 και EN 60335-2-41: 2003.

(NL) Overeenkomstigheidsverklaring

Wij **Grundfos** verklaren geheel onder eigen verantwoordelijkheid dat de produkten **SP** waarop deze verklaring betrekking heeft in overeenstemming zijn met de Richtlijnen van de Raad inzake de onderlinge aanpassing van de wetgevingen van de Lid-Staten betreffende

— Machines (98/37/EG).
Norm: EN ISO 12100.

— Elektromagnetische compatibiliteit (89/336/EEG).
Normen: EN 61000-6-2 en EN 61000-6-3.

— Elektrisch materiaal bestemd voor gebruik binnen bepaalde spanningsgrenzen (73/23/EEG) [95].
Normen: EN 60335-1: 2002 en EN 60335-2-41: 2003.

(S) Försäkran om överensstämmelse

Vi **Grundfos** försäkrar under ansvar, att produkterna **SP**, som omfattas av denna försäkran, är i överensstämmelse med Rådets Direktiv om inbördes närmande till EU-medlemsstaternas lagstiftning, avseende

— Maskinell utrustning (98/37/EC).
Använd standard: EN ISO 12100.

— Elektromagnetisk kompatibilitet (89/336/EC).
Använda standarder: EN 61000-6-2 och EN 61000-6-3.

— Elektrisk material avsedd för användning inom vissa spänningsgränser (73/23/EC) [95].
Använda standarder: EN 60335-1: 2002 och EN 60335-2-41: 2003.

(FIN) Vastaavuusvakuutus

Me **Grundfos** vakuutamme yksin vastuullisesti, että tuotteet **SP**, jota tämä vakuutus koskee, noudattavat direktiivejä jotka käsittelevät EY:n jäsenvaltioiden koneellisia laitteita koskevien lakien yhdenmukaisuutta seur.:

— Koneet (98/37/EY).
Käytetty standardi: EN ISO 12100.

— Elektromagneettinen vastaavuus (89/336/EY).
Käytetyt standardit: EN 61000-6-2 ja EN 61000-6-3.

— Määrättyjen jänniterajoitusten puitteissa käytettävät sähköiset laitteet (73/23/EY) [95].
Käytetyt standardit: EN 60335-1: 2002 ja EN 60335-2-41: 2003.

(DK) Overensstemmelseserklæring

Vi **Grundfos** erklærer under ansvar, at produkterne **SP**, som denne erklæring omhandler, er i overensstemmelse med Rådets direktiver om indbyrdes tilnærmelse til EF medlemsstaternes lovgivning om

— Maskiner (98/37/EF).
Anvendt standard: EN ISO 12100.

— Elektromagnetisk kompatibilitet (89/336/EØF).
Anvendte standarder: EN 61000-6-2 og EN 61000-6-3.

— Elektrisk materiel bestemt til anvendelse inden for visse spændingsgrænser (73/23/EØF) [95].
Anvendte standarder: EN 60335-1: 2002 og EN 60335-2-41: 2003.

Bjerringbro, 1st June 2006

Jan Strandgaard
Technical Director

SP

GB

CONTENTS

Prior to installation, read these installation and operating instructions. Installation and operation must comply with local regulations and accepted codes of good practice.

These instructions apply to Grundfos submersible motors, types MS and MMS, and Grundfos submersible pumps, type SP, fitted with submersible motors, types Grundfos MS or MMS, Franklin 4"-8", Mercury 6"-12" and Pleuger 6"-12".

If the pump is fitted with a motor of another motor make than Grundfos MS or MMS, please note that the motor data may differ from the data stated in these instructions.

1. Delivery and storage

1.1 Delivery

Grundfos submersible pumps are supplied from the factory in proper packing in which they should remain until they are to be installed.

During unpacking and prior to installation, care must be taken when handling the pump to ensure that misalignment does not occur due to bending.

Note: The pumps should remain in the packing until they are placed in vertical position during installation.
When the pump part and motor are supplied as separate units (long pumps), fit the motor to the pump as described in section *5.1 Fitting the motor to the pump*.

Note: The loose data plate supplied with the pump should be fixed close to the installation site.

The pump should not be exposed to unnecessary impact and shocks.

1.2 Storage and handling

Storage temperature

Pump: –20°C to +60°C.
Motor: –20°C to +70°C.

The motors must be stored in a closed, dry and well ventilated room.

Note: If MMS motors are stored for more than one year, the shaft must be turned by hand at least once a month.
If a motor has been stored for more than one year before installation, the rotating parts of the motor must be dismantled and checked before use.

The pump should not be exposed to direct sunlight.

If the pump has been unpacked, it should be stored horizontally, adequately supported, or vertically to prevent misalignment of the pump. Make sure that the pump cannot roll or fall over. During storage, the pump can be supported as shown in fig. 1.

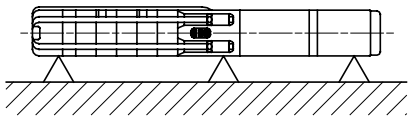

Fig. 1 Pump position during storage

1.2.1 Frost protection

If the pump has to be stored after use, it must be stored on a frost-free location, or it must be ensured that the motor liquid is frost-proof.

2. General data

2.1 Applications

Grundfos submersible pumps, type SP, are designed for a wide range of water supply and liquid transfer applications, such as the supply of fresh water to private homes or waterworks, water supply to nursery gardens or farms, drawdown of groundwater and pressure boosting, and various industrial jobs.

The pump must be installed so that the suction interconnector is completely submerged in the liquid. The pump can be installed either horizontally or vertically, see also section *3.2 Positional requirements*.

2.2 Pumped liquids

Clean, thin, **non-explosive** liquids without solid particles or fibres.

The maximum sand content of the water must not exceed 50 g/m^3. A larger sand content will reduce the life of the pump and increase the risk of blocking.

Note: When pumping liquids with a density higher than that of water, motors with correspondingly higher outputs must be used.

If liquids with a viscosity higher than that of water are to be pumped, please contact Grundfos.

The special SP A N, SP A R, SP N, SP R and SPE types are designed to accommodate liquids with higher aggressiveness than drinking water.

The maximum liquid temperature appears from section *3.4 Liquid temperatures/cooling*.

2.3 Sound pressure level

The sound pressure level has been measured in accordance with the rules laid down in the EC machinery directive 98/37/EC.

Sound pressure level of pumps

Applies to pumps submerged in water, without external regulating valve.

Pump type	$\overline{L}_{pA}$ [dB(A)]
SP 1A	<70
SP 2A	<70
SP 3A	<70
SP 5A	<70
SP 8A	<70
SP 14A	<70
SP 17	<70
SP 30	<70
SP 46	<70
SP 60	<70
SP 77	<70
SP 95	<70
SP 125	79
SP 160	79
SP 215	82

Sound pressure level of motors

The sound pressure level of Grundfos MS and MMS motors is lower than 70 dB(A).

Other motor makes: See installation and operating instructions for these motors.

3. Preparation

Before starting work on the pump, make sure that the electricity supply has been switched off and that it cannot be accidentally switched on.

3.1 Checking of liquid in motor

The submersible motors are factory-filled with a special non-poisonous liquid, which is frost-proof down to –20°C.

Note: The level of the liquid in the motor must be checked and the motor must be refilled, if required.

Note: If there is a risk of frost, special Grundfos liquid must be used to refill the motor. Otherwise clean water may be used for refilling (however, **never** use distilled water).

Refilling of liquid is carried out as described below.

3.1.1 Grundfos submersible motors MS 4000 and MS 402

The filling hole for motor liquid is placed in the following positions:

MS 4000: in the top of the motor.

MS 402: in the bottom of the motor.

1. Position the submersible pump as shown in fig. 2.
   The filling screw must be at the highest point of the motor.
2. Remove the screw from the filling hole.
3. Inject liquid into the motor with the filling syringe, fig. 2, until the liquid runs back out of the filling hole.
4. Replace the screw in the filling hole and tighten securely before changing the position of the pump.

Torques:

MS 4000: 3.0 Nm.

MS 402: 2.0 Nm.

The submersible pump is now ready for installation.

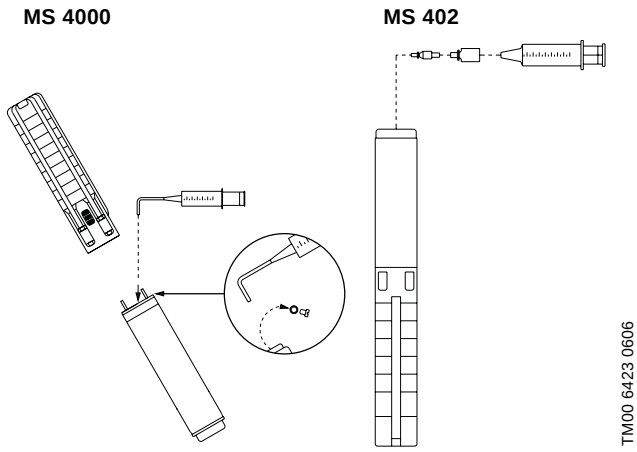

Fig. 2 Pump position during filling – MS 4000 and MS 402

3.1.2 Grundfos submersible motors MS 6000

- If the motor is delivered from stock, the liquid level must be checked before the motor is fitted to the pump, see fig. 3.
- On pumps delivered directly from Grundfos, the liquid level has already been checked.
- In the case of service, the liquid level must be checked, see fig. 3.

Filling procedure:

The filling hole for motor liquid is placed at the top of the motor.

1. Position the submersible pump as shown in fig. 3.
   The filling screw must be at the highest point of the motor.
2. Remove the screw from the filling hole.
3. Inject liquid into the motor with the filling syringe, fig. 3, until the liquid runs back out of the filling hole.
4. Replace the screw in the filling hole and tighten securely before changing the position of the pump.

Torque: 3.0 Nm.

The submersible pump is now ready for installation.

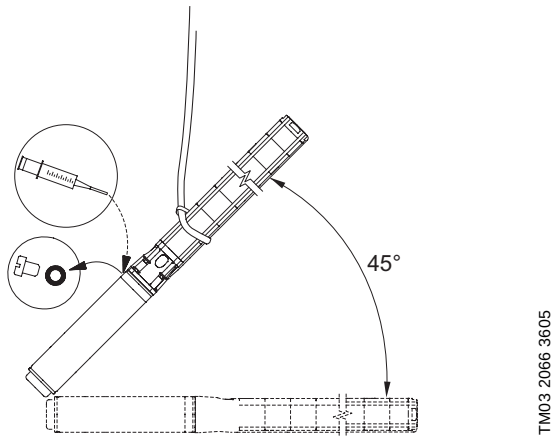

Fig. 3 Pump position during filling – MS 6000

3.1.3 Grundfos submersible motors MMS 6000, MMS 8000, MMS 10000 and MMS 12000

Filling procedure:

1. Place the motor at a 45° angle with the top of the motor upwards, see fig. 4.
2. Unscrew the plug A and place a funnel in the hole.
3. Pour tap water into the motor until the motor liquid inside the motor starts running out at A.
   Note: Do not use motor liquid as it contains oil.
4. Remove the funnel and refit the plug A.

Note: Before fitting the motor to a pump after a long period of storage, lubricate the shaft seal by adding a few drops of water and turning the shaft.

The submersible pump is now ready for installation.

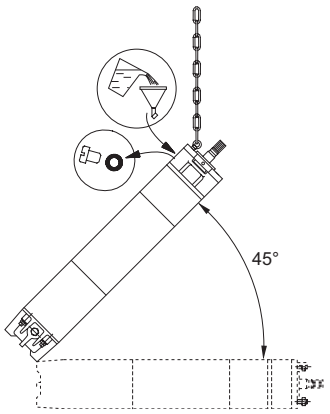

TM03 2065 3605

Fig. 4 Motor position during filling – MMS

3.1.4 Franklin submersible motors from 3 kW and up

The level of the motor liquid in Franklin 4" and 6" submersible motors is checked by measuring the distance from the bottom plate to the built-in rubber diaphragm. This distance can be measured by inserting a rule or a small rod through the hole until it touches the diaphragm, fig. 5.
Note: Take care not to damage the diaphragm.

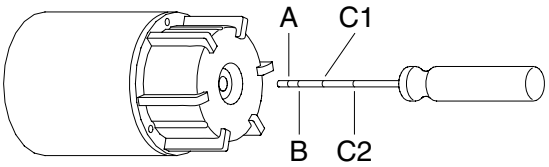

TM00 1353 5092

Fig. 5 Measuring the distance from bottom plate to diaphragm

The following table shows the correct distance from the outside of the bottom plate to the diaphragm:

Motor	Dimension	Distance
Franklin 4", 0.25 to 3 kW (see fig. 6a)	A	8 mm
Franklin 4", 3 to 7.5 kW (see fig. 6b)	B	16 mm
Franklin 6", 4 to 45 kW (see fig. 6c)	C1	35 mm
Franklin 6", 4 to 22 kW (see fig. 6d)	C2	59 mm

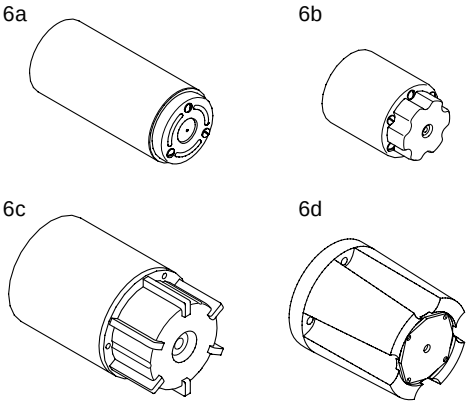

TM00 6422 3695

Fig. 6 Franklin submersible motors

If the distance is not correct, carry out an adjustment as described in section *3.1.5 Franklin submersible motors*.

3.1.5 Franklin submersible motors

The level of the motor liquid in Franklin 8" submersible motors is checked as follows:

1. Prise out the filter in front of the valve at the top of the motor using a screwdriver. If the filter is slotted, unscrew. The position of the filling valve is shown in fig. 7.
2. Press the filling syringe against the valve and inject the liquid, fig. 7. If the valve cone is depressed too far, it may be damaged thus causing the valve to leak.
3. Remove any air in the motor by pressing the point of the filling syringe lightly against the valve.
4. Repeat the process of injecting liquid and releasing air until the liquid starts running out or the diaphragm is in its correct position (Franklin 4" and 6").
5. Reinstall the filter after refilling with liquid.

The submersible pump is now ready for installation.

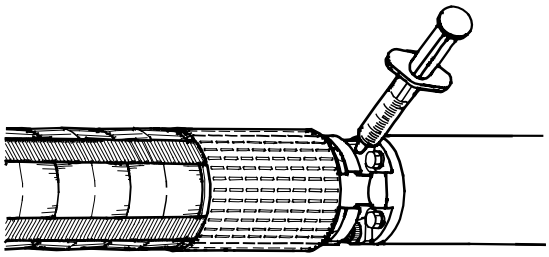

TM00 1354 5092

Fig. 7 Position of filling valve

3.1.6 Mercury submersible motors

The level of the liquid in the motor is checked as described for Franklin 8" motors, see section *3.1.5 Franklin submersible motors*.

3.1.7 Pleuger submersible motors

The level of the liquid in the motor is checked as described for Franklin 8" motors, see section *3.1.5 Franklin submersible motors*.

3.2 Positional requirements

If the pump is to be installed in a position where it is accessible, the coupling must be suitably isolated from human touch. The pump can for instance be built into a flow sleeve.

Depending on motor type, the pump can be installed either vertically or horizontally. A complete list of motor types suitable for horizontal installation is shown in section *3.2.1*.

If the pump is installed horizontally, the discharge port **should never** fall below the horizontal plane, see fig. 8.

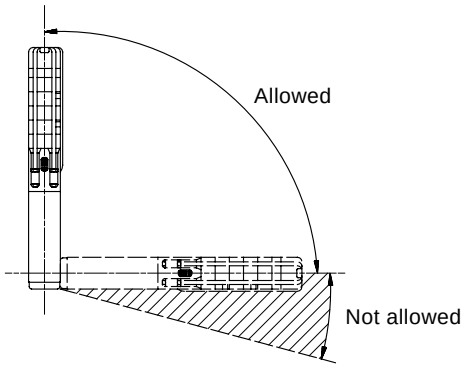

TM00 1355 5092

Fig. 8 Positional requirements

If the pump is installed horizontally, e.g. in a tank, it is recommended to fit it in a flow sleeve.

3.2.1 Motors suitable for horizontal installation

Motor type	Power output 50 Hz	Power output 60 Hz
	[kW]	[kW]
MS	All sizes	All sizes
MMS 6000	3.7 to 18.5	3.7 to 18.5
MMS 8000	22.0 to 63.0	22.0 to 63.0
MMS 10000	75.0 to 110.0	75.0 to 110.0
MMS 12000	147.0 to 190.0	–

When Franklin 4" submersible motors up to and including 2.2 kW are started more than 10 times a day, it is recommended to incline the motor at least 15° above the horizontal plane in order to minimize wearing of the upthrust disc.

Note: During operation, the suction interconnector of the pump must always be completely submerged in the liquid.

If the pump is used for pumping hot liquids (40° to 60°C), care should be taken to ensure that persons cannot come into contact with the pump and the installation, e.g. by installing a guard.

3.3 Diameter of pump/motor

The maximum diameter of the pump/motor is as shown in the tables on pages 146 and 147.

It is recommended to check the borehole with an inside calliper to ensure unobstructed passage.

3.4 Liquid temperatures/cooling

The maximum liquid temperature and the minimum liquid velocity over the motor appear from the following table.

It is recommended to install the motor above the well screen in order to achieve proper motor cooling.

Note: In cases where the stated liquid velocity cannot be achieved, a flow sleeve must be installed.

If there is a risk of sediment build-up, such as sand, around the motor, a flow sleeve should be used in order to ensure proper cooling of the motor.

3.4.1 Maximum liquid temperature

Out of consideration for the rubber parts in pump and motor, the liquid temperature must not exceed 40°C (~105°F). See also the following table.

The pump can operate at liquid temperatures between 40°C and 60°C (~105°F and 140°F) provided that all rubber parts are replaced every third year.

Motor	Installation		
	Flow past the motor	Vertical	Horizontal
Grundfos MS and MMS	**Free convection 0 m/s**	20°C (~68°F)	Flow sleeve recommended
Grundfos MS	**0.15 m/s**	40°C (~105°F)	40°C (~105°F)
Grundfos MS I *	**0.15 m/s**	60°C (~140°F) Flow sleeve recommended	60°C (~140°F) Flow sleeve recommended
Grundfos MMS	**0.15 m/s**	25°C (~77°F)	25°C (~77°F)
Franklin 4"	**0.08 m/s**	30°C (~85°F)	30°C (~85°F)
Franklin 6" and 8"	**0.16 m/s**	30°C (~85°F)	30°C (~85°F)
Mercury	**0.15 m/s**	25°C (~77°F)	25°C (~77°F)
Pleuger	**0.5 m/s**	30°C (~86°F)	30°C (~86°F)

* At an ambient pressure of minimum 1 bar (1 MPa)

Note: By free convection is meant that the borehole diameter is at least 2" larger than the diameter of the submersible motor.

Other motor makes: See motor specifications.

3.5 Pipework connection

If noise may be transmitted to the building through the pipework, it is advisable to use plastic pipes.

Note: Plastic pipes are recommended for 4" pumps only.

When plastic pipes are used, the pump should be secured by an unloaded straining wire.

Make sure that the plastic pipes to be used are suitable for the actual liquid temperature and the pump pressure.

When connecting plastic pipes, a compression coupling should be used between the pump and the first pipe section.

4. Electrical connection

Before starting work on the pump, make sure that the electricity supply has been switched off and that it cannot be accidentally switched on.

4.1 General

The electrical connection should be carried out by an authorized electrician in accordance with local regulations.

The supply voltage, rated maximum current and cos φ appear from the loose data plate that **must** be fitted close to the installation site.

The required voltage quality for Grundfos **MS** and **MMS** submersible motors, measured at the motor terminals, is –10%/+6% of the nominal voltage during continuous operation (including variation in the supply voltage and losses in cables).

Furthermore, it must be checked that there is voltage symmetry in the electricity supply lines, i.e. same difference of voltage between the individual phases, see also section *9. Checking of motor and cable*, point 2.

The pump must be earthed.

The pump must be connected to an external mains switch with a minimum contact gap of 3 mm in all poles.

GB

If Grundfos MS motors with a built-in temperature transmitter (Tempcon) are not installed together with a MP 204 or similar Grundfos motor protection, they must be connected to a 0.47 µF capacitor approved for phase-phase operation (IEC 384-14) to meet the EC EMC directive (89/336/EEC). The capacitor must be connected to the two phases to which the temperature transmitter is connected, see fig. 9.

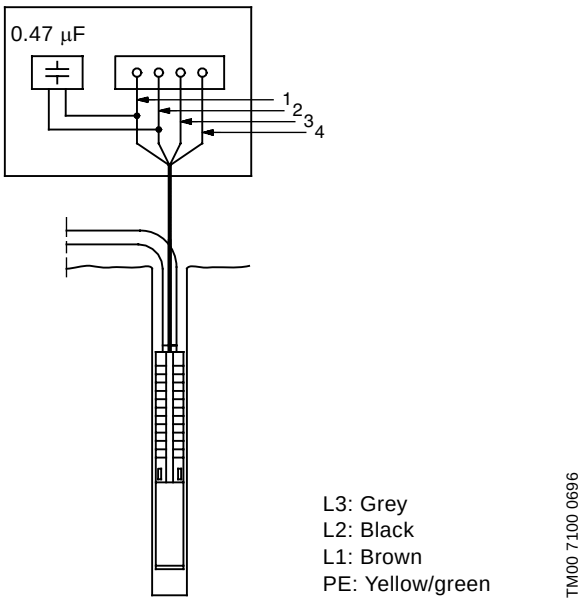

Fig. 9 Connection of capacitor

The motors are wound for direct-on-line starting or star-delta starting and the starting current is between 4 and 6 times the full load current of the motor.

The run-up time of the pump is only about 0.1 second. Direct-on-line starting is therefore normally approved by the electricity supply authorities.

4.1.1 Frequency converter operation

Grundfos motors

Three-phase Grundfos motors can be connected to a frequency converter.

Note: If a Grundfos MS motor with temperature transmitter is connected to a frequency converter, a fuse incorporated in the transmitter will melt and the transmitter will be inactive. The transmitter cannot be reactivated. This means that the motor will operate like a motor without a temperature transmitter.

If a temperature transmitter is required, a Pt100 sensor for fitting to the submersible motor can be ordered from Grundfos.

During frequency converter operation, it is not advisable to run the motor at a frequency higher than the nominal frequency (50 or 60 Hz). In connection with pump operation, it is important never to reduce the frequency (and consequently the speed) to such a level that the necessary flow of cooling liquid past the motor is no longer ensured.

To avoid damage to the pump part, it must be ensured that the motor stops when the pump flow falls below 0.1 x nominal flow.

Depending on the frequency converter type, it may expose the motor to detrimental voltage peaks.

Motors, type MS 402, for supply voltages up to and including 440 V (see motor nameplate) must be protected against voltage peaks higher than 650 V (peak-value) between the supply terminals.

It is recommended to protect other motors against voltage peaks higher than 850 V.

The above disturbance can be abated by installing an **RC filter** between the frequency converter and the motor.

Possible increased acoustic noise from the motor can be abated by installing an **LC filter** which will also eliminate voltage peaks from the frequency converter.

For further details, please contact your frequency converter supplier or Grundfos.

Other motor makes than Grundfos

Please contact Grundfos or the motor manufacturer.

4.2 Motor protection

4.2.1 Single-phase motors

Single-phase submersible motors, type MS 402, incorporate a thermal switch and require no additional motor protection.

When the motor has been thermally switched off, the motor terminals are still live.
When the motor has cooled sufficiently, it will restart automatically.

Single-phase submersible motors, type MS 4000, must be protected. A protective device can either be incorporated in a control box or be separate.

Franklin 4" PSC motors must be connected to a motor starter.

4.2.2 Three-phase motors

Grundfos **MS** motors are available with or without a built-in temperature transmitter.

Motors **with** a built-in and operational temperature transmitter must be protected by means of:

- a motor starter with thermal relay or
- an MTP 75 and a motor starter with thermal relay or
- an MP 204 and contactor(s).

Motors **without** or **with a non**-operational temperature transmitter must be protected by means of:

- a motor starter with thermal relay or
- an MP 204 and contactor(s).

Grundfos **MMS** motors have no built-in temperature transmitter. A Pt100 sensor is available as an accessory.

Motors **with** a Pt100 sensor must be protected by means of:

- a motor starter with thermal relay or
- an MP 204 and contactor(s).

Motors **without** a Pt100 sensor must be protected by means of:

- a motor starter with thermal relay or
- an MP 204 and contactor(s).

4.2.3 Required motor starter settings

For cold motors, the tripping time for the motor starter must be less than 10 seconds at 5 times the rated maximum current of the motor.

Note: If this requirement is not met, the motor warranty will be invalidated.

In order to ensure the optimum protection of the submersible motor, the starter overload unit should be set in accordance with the following guidelines:

1. Set the starter overload to the rated maximum current of the motor.
2. Start the pump and let it run for half an hour at normal performance.
3. Slowly grade down the scale indicator until the motor trip point is reached.
4. Increase the overload setting by 5%.

The highest permissible setting is the rated maximum current of the motor.

For motors wound for star-delta starting, the starter overload unit should be set as above, but the maximum setting should be as follows:

Starter overload setting = Rated maximum current x 0.58.

The highest permissible start-up time for star-delta starting or autotransformer starting is 2 seconds.

4.3 Lightning protection

The installation can be fitted with a special overvoltage protective device to protect the motor from voltage surges in the electricity supply lines when lightning strikes somewhere in the area, see fig. 10.

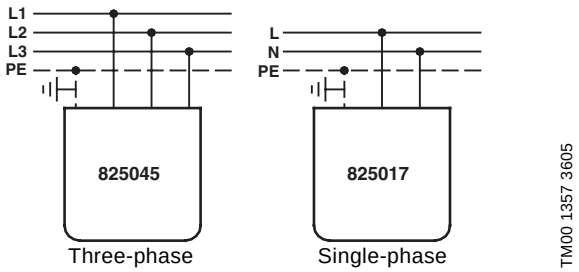

Fig. 10 Fitting an overvoltage protective device

The overvoltage protective device will not, however, protect the motor against a direct stroke of lightning.

The overvoltage protective device should be connected to the installation as close as possible to the motor and always in accordance with local regulations.
Ask Grundfos for lightning protective devices.

Submersible motors, type MS 402, however, require no further lightning protection as they are highly insulated.

Ask for a special cable termination kit with a built-in overvoltage protective device for Grundfos 4" submersible motors (part no. 799911 / 799912).

4.4 Cable sizing

Make sure that the submersible drop cable can withstand permanent submersion in the actual liquid and at the actual temperature.

Grundfos can supply submersible drop cables for a wide range of installations.

The cross-section (q) of the cable should meet the following requirements:

1. The submersible drop cable should be dimensioned to the rated maximum current (I) of the motor.
2. The cross-section should be sufficient to make a voltage drop over the cable acceptable.

Use the largest of the cross sections found under points 1. and 2.

Re 1: The following table specifies the current value of Grundfos submersible drop cables (i.e. the maximum current tolerated by the drop cable) at an ambient temperature of maximum 30°C. Please contact Grundfos if the ambient temperature lies above 30°C.

When sizing the submersible drop cable, make sure that the rated maximum current does not exceed the current value (I_S).

For star-delta starting, however, size the cables so that 0.58 x the rated maximum current of the motor does not exceed the current value (I_S) of the cables.

q [mm^2]	I_S [A]	q [mm^2]	I_S [A]
1.5	18.5	50	153
2.5	25	70	196
4	34	95	238
6	43	120	276
10	60	150	319
16	80	185	364
25	101	240	430
35	126	300	497

If Grundfos submersible drop cables are not used, the cross-section should be selected on the basis of the current values of the actual cables.

Re 2:
Note: The cross-section of the submersible drop cable must be large enough to meet the voltage quality requirements specified in section *4.1 General*.

Determine the voltage drop for the cross-section of the submersible drop cable by means of the diagrams on pages 148 and 149, where

I = Rated maximum current of the motor.
For star-delta starting
I = rated maximum current of the motor x 0.58.

Lx = Length of cable converted to a voltage drop of 1% of the nominal voltage.

$$Lx = \frac{\text{length of drop cable}}{\text{permissible voltage drop in \%}}$$

q = Cross-section of submersible drop cable.

Draw a straight line between the actual I-value and the Lx-value. Where the line intersects the q-axis, select the cross-section that lies right above the intersection.

The diagrams are made on the basis of the formulas:

Single-phase submersible motor

$$L = \frac{U \times \Delta U}{I \times 2 \times 100 \times \left(\cos\varphi \times \frac{\rho}{q} + \sin\varphi \times XI\right)}$$

Three-phase submersible motor

$$L = \frac{U \times \Delta U}{I \times 1{,}73 \times 100 \times \left(\cos\varphi \times \frac{\rho}{q} + \sin\varphi \times XI\right)}$$

where

L = Length of submersible drop cable [m]
U = Nominal voltage [V]
ΔU = Voltage drop [%]
I = Rated maximum current of the motor [A]
$\cos\varphi$ = 0.9
ρ = Specific resistance: 0.02 [Ωmm^2/m]
q = Cross-section of submersible drop cable [mm^2]
$\sin\varphi$ = 0.436
XI = Inductive resistance: 0.078 x 10^{-3} [Ω/m]

4.5 Control of single-phase MS 402

The single-phase MS 402 submersible motor incorporates motor protection which cuts out the motor in case of excessive winding temperatures while the motor is still supplied with voltage. Allow for this, when the motor forms part of a control system.

If a compressor is included in a control system together with an ochre filter, the compressor will run continuously once the motor protection has cut out the motor, unless other special precautions have been taken.

4.6 Connection of single-phase motors

4.6.1 2-wire motors

Grundfos MS 402 2-wire motors incorporate motor protection and a starter device and can therefore be connected directly to the mains, see fig. 11.

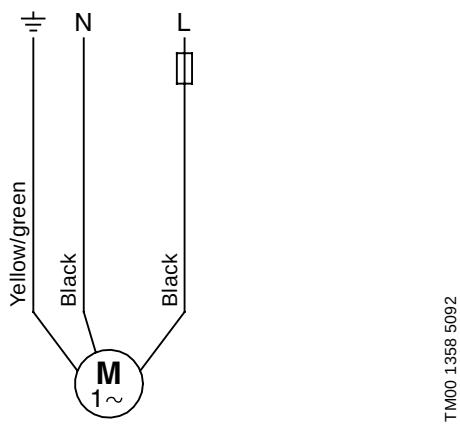

Fig. 11 2-wire motors

GB

4.6.2 PSC motors

The PSC motors are connected to the mains via an operating capacitor which should be dimensioned for continuous operation.

Select the correct capacitor size from the following table:

Motor	Capacitor
0.25 kW	12.5 µF / 400 V / 50 Hz
0.37 kW	16 µF / 400 V / 50 Hz
0.55 kW	20 µF / 400 V / 50 Hz
0.75 kW	30 µF / 400 V / 50 Hz
1.10 kW	40 µF / 400 V / 50 Hz
1.50 kW	50 µF / 400 V / 50 Hz
2.20 kW	75 µF / 400 V / 50 Hz

The Grundfos MS 402 PSC motor incorporates motor protection and should be connected to the mains as shown in fig. 12.

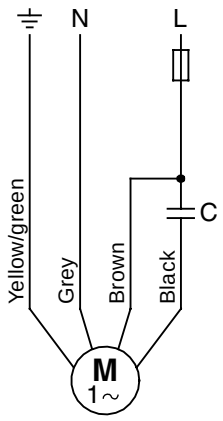

TM00 1359 5092

Fig. 12 PSC motors

See www.franklin-electric.com and fig. 13.

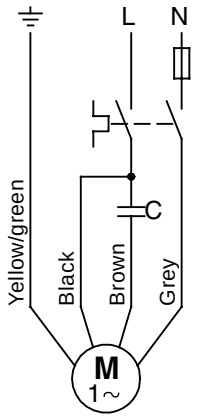

TM00 1361 1200

Fig. 13 Franklin submersible motors

4.6.3 3-wire motors

Grundfos MS 4000 3-wire motors should be connected to the mains via a Grundfos control box SA-SPM 2 or 3 incorporating motor protection.

Grundfos MS 402 3-wire motors incorporate motor protection and should be connected to the mains via a Grundfos control box SA-SPM 2 or 3 without motor protection.

The connection of MS 4000 and MS 402 motors appears from the following table:

Motor	Cable	Control box	Mains
Up to 0.75 kW	Grey Brown Black Yellow/green	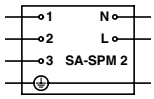	N L PE
From 1.10 kW	Grey Brown Black Yellow/green	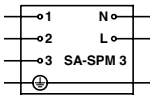	N L PE

4.7 Connection of three-phase motors

Three-phase submersible motors must be protected, see section *4.2.2 Three-phase motors*.

For electrical connection by means of the MP 204, see the separate installation and operating instructions for this unit.

When a conventional motor starter is being used, the electrical connection should be carried out as described below.

4.7.1 Checking of direction of rotation

Note: The pump must not be started until the suction interconnector has been completely submerged in the liquid.

When the pump has been connected to the electricity supply, determine the correct direction of rotation as follows:

1. Start the pump and check the quantity of water and head developed.
2. Stop the pump and interchange two of the phase connections. In the case of motors wound for star-delta starting, exchange U1 by V1 and U2 by V2.
3. Start the pump and check the quantity of water and head developed.
4. Stop the pump.
5. Compare the results taken under points 1. and 3. The connection which gives the larger quantity of water and the higher head is the correct connection.

4.7.2 Grundfos motors, direct-on-line starting

The connection of Grundfos submersible motors wound for direct-on-line starting appears from the following table and fig. 14.

Mains	Cable/connection
	Grundfos 4" and 6" motors
PE	PE (yellow/green)
L1	U (brown)
L2	V (black)
L3	W (grey)

Check the direction of rotation as described in section *4.7.1 Checking of direction of rotation*.

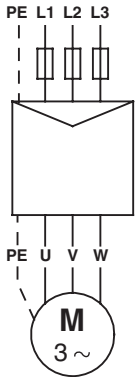

TM03 2099 3705

Fig. 14 Grundfos motors, direct-on-line starting

4.7.3 Grundfos motors, star-delta starting

The connection of Grundfos submersible motors wound for star-delta starting appears from the following table and fig. 15.

Connection	Grundfos 6" motors
PE	Yellow/green
U1	Brown
V1	Black
W1	Grey
W2	Brown
U2	Black
V2	Grey

Check the direction of rotation as described in section *4.7.1 Checking of direction of rotation*.

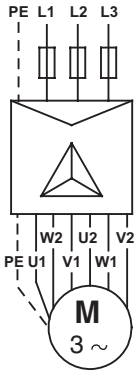

TM03 2100 3705

Fig. 15 Grundfos motors, star-delta starting

If star-delta starting is not required, but direct-on-line starting is, the submersible motors should be connected as shown in fig. 16.

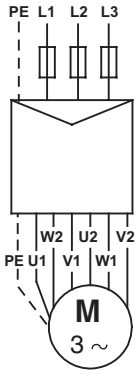

TM03 2101 3705

Fig. 16 Grundfos motors, direct-on-line starting

4.7.4 Connection in the case of unidentified cable marking/ connection

If it is unknown where the individual leads are to be connected to the mains in order to ensure the correct direction of rotation, proceed as follows:

Motors wound for direct-on-line starting

Connect the pump to the mains as is expected to be right.

Then check the direction of rotation as described in section *4.7.1 Checking of direction of rotation*.

Motors wound for star-delta starting

The windings of the motor are determined by means of an ohmmeter, and the lead sets for the individual windings are named accordingly: U1-U2, V1-V2 and W1-W2, see fig. 17.

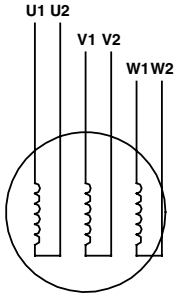

TM00 1367 5092

Fig. 17 Unidentified cable marking/connection – motors wound for star-delta starting

If star-delta starting is required, the leads should be connected as shown in fig. 15.

If direct-on-line starting is required, the leads should be connected as shown in fig. 16.

Then check the direction of rotation as described in section *4.7.1 Checking of direction of rotation*.

4.7.5 Franklin, Mercury and Pleuger motors

The connection of Franklin, Mercury and Pleuger motors appears from section *4.7.4 Connection in the case of unidentified cable marking/connection*.

5. Pump installation

Before starting any work on the pump/motor, make sure that the electricity supply has been switched off and that it cannot be accidentally switched on.

5.1 Fitting the motor to the pump

When the pump part and the motor are supplied as separate units (long pumps), fit the motor to the pump as follows:

1. Use pipe clamps when handling the motor.
2. Place the motor in vertical position at the borehole seal, see fig. 18.

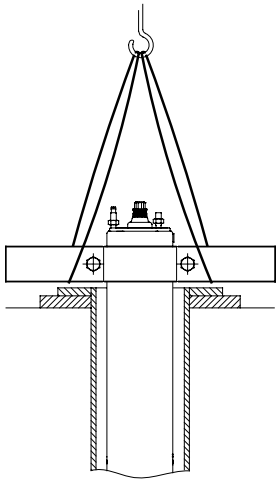

TM00 5259 2402

Fig. 18 Motor in vertical position

3. Lift the pump part by means of pipe clamps fitted to the extension pipe, see fig. 19.

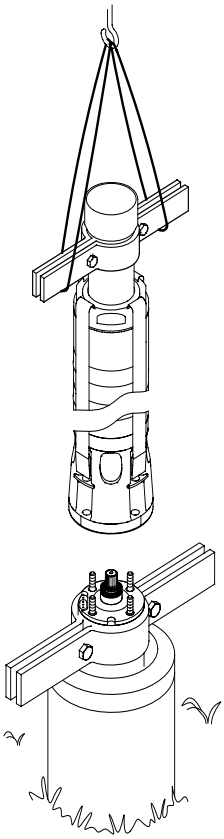

Fig. 19 Lifting the pump into position

4. Place the pump part on top of the motor.
5. Fit and tighten the nuts, see the following table.

The bolts and nuts securing the straps to the pump must be tightened diagonally to the torques stated in the following table:

Straps bolt/nut	Torque [Nm]
M8	18
M10	35
M12	45
M16	120
SP 215, 50 Hz, with more than 8 stages SP 215, 60 Hz, with more than 5 stages	150

Note: Make sure that the coupling between the pump and motor engages properly.

When fitting the motor to the pump part, the nuts must be tightened diagonally to the torques stated in the following table:

Pump/motor staybolt diameter	Torque [Nm]
M8	18
M12	70
M16	150
M20	280

Note: Make sure that the pump chambers are aligned when assembly has been completed.

5.2 Removal and fitting of cable guard

For removal and fitting of cable guard(s), see pages 150 and 151.

If the cable guard is screwed on to the pump, such as the SP 215 and sleeved pumps, the cable guard should be removed and fitted by means of screws.

Note: Make sure that the pump chambers are aligned when the cable guard has been fitted.

5.3 Fitting of submersible drop cable

5.3.1 Grundfos submersible motors

Before fitting the submersible drop cable to the motor, make sure that the cable socket is clean and dry.

To facilitate the fitting of the cable, lubricate the rubber parts of the cable plug with non-conducting silicone paste.

Tighten the screws holding the cable to the torques stated:

MS 402: 2.0 Nm.
MS 4000: 2.0 Nm.
MS 6000: 4.0-5.0 Nm.
MMS 6000: 10 Nm.
MMS 12000: 15 Nm.

5.4 Riser pipe

If a tool, e.g. a chain pipe wrench, is used when the riser pipe is fitted to the pump, the pump must only be gripped by the pump discharge chamber.

The threaded joints on the riser pipe must all be well cut and fit together to ensure that they do not work loose when subjected to torque reaction caused by the starting and stopping of the pump.

The thread on the first section of the riser pipe which is to be screwed into the pump should not be longer than the threads in the pump.

If noise may be transmitted to the building through the pipework, it is advisable to use plastic pipes.

Note: Plastic pipes are recommended for 4" pumps only.

When plastic pipes are used, the pump should be secured by an unloaded straining wire to be fastened to the discharge chamber of the pump, see fig. 20.

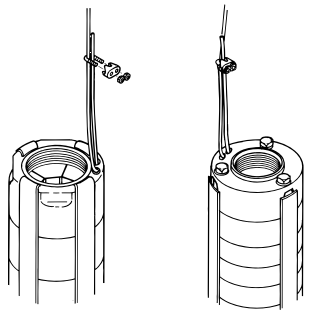

Fig. 20 Fixing the straining wire

When connecting plastic pipes, a compression coupling should be used between the pump and the first pipe section.

Where flanged pipes are used, the flanges should be slotted to take the submersible drop cable and a water indicator hose, if fitted.

5.5 Maximum installation depth below water level

Grundfos MS 402: 150 m.
Grundfos MS 4000: 600 m.
Grundfos MS 6000: 600 m.
Grundfos MMS: 250 m.
Franklin motors: 350 m.
Mercury motors: 350 m.
Pleuger motors: 350 m.

5.6 Cable fitting

Cable clips must be fitted every 3 metres to fix the submersible drop cable and the straining wire, if fitted, to the riser pipe of the pump.

Grundfos supplies cable clip sets on request. The set consists of a 1.5 mm thick rubber band and 16 buttons.

Cable fitting: Cut off the rubber band so that the piece with no slit becomes as long as possible.
Insert a button in the first slit.
Position the wire alongside the submersible drop cable, fig. 21.

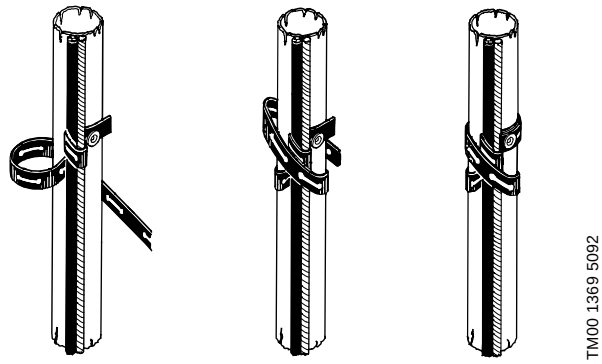

Fig. 21 Fitting the cable clips

Wind the band once around the wire and the cable.
Then wind it tightly at least twice around the pipe, wire and the cable.
Push the slit over the button and then cut off the band.

Where large cable cross-sections are used, it will be necessary to wind the band several times.

Where plastic pipes are used, some slackness must be left between each cable clip as plastic pipes expand when loaded.

When flanged pipes are used, the cable clips should be fitted above and below each joint.

5.7 Lowering the pump

It is recommended to check the borehole by means of an inside calliper before lowering the pump to ensure unobstructed passage.

Lower the pump carefully into the borehole, taking care not to damage the motor cable and the submersible drop cable.

Note: Do not lower or lift the pump by means of the motor cable.

5.8 Installation depth

The dynamic water level should always be above the suction interconnector of the pump, see section *3.2 Positional requirements* and fig. 22.

Minimum inlet pressure is indicated in the NPSH curve for the pump.
The minimum safety margin should be 1 metre head.

It is recommended to install the pump so that the motor part is above the well screen in order to ensure optimum cooling, see section *3.4 Liquid temperatures/cooling*.

When the pump has been installed to the required depth, the installation should be finished by means of a borehole seal.

Slacken the straining wire so that it becomes unloaded and lock it to the borehole seal by means of wire locks.

Note: For pumps fitted with plastic pipes, the expansion of the pipes when loaded should be taken into consideration, when deciding on the installation depth of the pump.

6. Start-up and operation

6.1 Start-up

When the pump has been connected correctly and it is submerged in the liquid to be pumped, it should be started with the discharge valve closed off to approx. 1/3 of its maximum volume of water.

Check the direction of rotation as described in section *4.7.1 Checking of direction of rotation*.

If there are impurities in the water, the valve should be opened gradually as the water becomes clearer. The pump should not be stopped until the water is completely clean, as otherwise the pump parts and the non-return valve may choke up.

As the valve is being opened, the drawdown of the water level should be checked to ensure that the pump always remains submerged.

The dynamic water level should always be above the suction interconnector of the pump, see section *3.2 Positional requirements* and fig. 22.

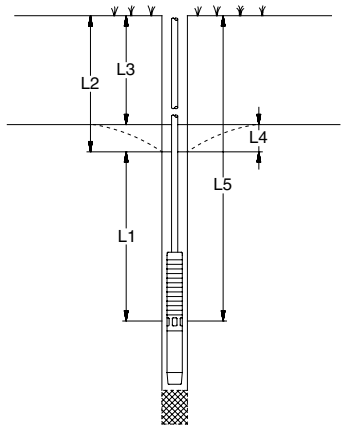

Fig. 22 Comparison of various water levels

L1: Minimum installation depth below dynamic water level. Minimum 1 metre is recommended.

L2: Depth to dynamic water level.

L3: Depth to static water level.

L4: Drawdown. This is the difference between the dynamic and the static water levels.

L5: Installation depth.

If the pump can pump more than yielded by the well, it is recommended to fit the Grundfos control unit, type MP 204, or some other type of dry-running protection.

If no water level electrodes or level switches are installed, the water level may be drawn down to the suction interconnector of the pump and the pump will then draw in air.

Note: Long time operation with water containing air may damage the pump and cause insufficient cooling of the motor.

6.2 Operation

6.2.1 Minimum flow rate

To ensure the necessary cooling of the motor, the pump should never be set so low that the cooling requirements specified in section *3.4 Liquid temperatures/cooling* cannot be met.

GB

6.2.2 Frequency of starts and stops

Motor type	Number of starts
MS 402	Minimum 1 per year is recommended. Maximum 100 per hour. Maximum 300 per day.
MS 4000	Minimum 1 per year is recommended. Maximum 100 per hour. Maximum 300 per day.
MS 6000	Minimum 1 per year is recommended. Maximum 30 per hour. Maximum 300 per day.
MMS 6000	Minimum 1 per year is recommended. Maximum 15 per hour. Maximum 360 per day.
MMS 8000	Minimum 1 per year is recommended. Maximum 10 per hour. Maximum 240 per day.
MMS 10000	Minimum 1 per year is recommended. Maximum 8 per hour. Maximum 190 per day.
MMS 12000	Minimum 1 per year is recommended. Maximum 5 per hour. Maximum 120 per day.
Franklin	Minimum 1 per year is recommended. Maximum 100 per day.
Mercury 6"	Minimum 1 per year is recommended. Maximum 20 per hour.
Mercury 8"	Minimum 1 per year is recommended. Maximum 15 per hour.
Mercury 10"	Minimum 1 per year is recommended. Maximum 10 per hour.
Mercury 12"	Minimum 1 per year is recommended. Maximum 6 per hour.
Pleuger	Minimum 1 per year is recommended. Maximum 100 per day.

7. Maintenance and service

The pumps are maintenance-free.

All pumps are easy to service.

Service kits and service tools are available from Grundfos.

The pumps can be serviced at a Grundfos service centre.

If a pump has been used for a liquid which is injurious to health or toxic, the pump will be classified as contaminated.

If Grundfos is requested to service the pump, Grundfos must be contacted with details about the pumped liquid, etc. *before* the pump is returned for service. Otherwise Grundfos can refuse to accept the pump for service.

Possible costs of returning the pump are paid by the customer.

8. Fault finding chart

Fault	Cause	Remedy
1. The pump does not run.	a) The fuses are blown.	Replace the blown fuses. If the new ones blow too, the electric installation and the submersible drop cable should be checked.
	b) The ELCB or the voltage-operated ELCB has tripped out.	Cut in the circuit breaker.
	c) No electricity supply.	Contact the electricity supply authorities.
	d) The motor starter overload has tripped out.	Reset the motor starter overload (automatically or possibly manually). If it trips out again, check the voltage. Is the voltage OK, see items e) - h).
	e) Motor starter/contactor is defective.	Replace the motor starter/contactor.
	f) Starter device is defective.	Repair/replace the starter device.
	g) The control circuit has been interrupted or is defective.	Check the electric installation.
	h) The dry-running protection has cut off the the electricity supply to the pump, due to low water level.	Check the water level. If it is OK, check the water level electrodes/level switch.
	i) The pump/submersible drop cable is defective.	Repair/replace the pump/cable.
2. The pump runs but gives no water.	a) The discharge valve is closed.	Open the valve.
	b) No water or too low water level in borehole.	See item 3 a).
	c) The non-return valve is stuck in its shut position.	Pull out the pump and clean or replace the valve.
	d) The inlet strainer is choked up.	Pull out the pump and clean the strainer.
	e) The pump is defective.	Repair/replace the pump.
3. The pump runs at reduced capacity.	a) The drawdown is larger than anticipated.	Increase the installation depth of the pump, throttle the pump or replace it by a smaller model to obtain a smaller capacity.
	b) Wrong direction of rotation.	See section *4.7.1 Checking of direction of rotation*.
	c) The valves in the discharge pipe are partly closed/blocked.	Check and clean/replace the valves, if necessary.
	d) The discharge pipe is partly choked by impurities (ochre).	Clean/replace the discharge pipe.
	e) The non-return valve of the pump is partly blocked.	Pull out the pump and check/replace the valve.
	f) The pump and the riser pipe are partly choked by impurities (ochre).	Pull out the pump. Check and clean or replace the pump, if necessary. Clean the pipes.
	g) The pump is defective.	Repair/replace the pump.
	h) Leakage in the pipework.	Check and repair the pipework.
	i) The riser pipe is defective.	Replace the riser pipe.
4. Frequent starts and stops.	a) The differential of the pressure switch between the start and stop pressures is too small.	Increase the differential. However, the stop pressure must not exceed the operating pressure of the pressure tank, and the start pressure should be high enough to ensure sufficient water supply.
	b) The water level electrodes or level switches in the reservoir have not been installed correctly.	Adjust the intervals of the electrodes/level switches to ensure suitable time between the cutting-in and cutting-out of the pump. See installation and operating instructions for the automatic devices used. If the intervals between stop/start cannot be changed via the automatics, the pump capacity may be reduced by throttling the discharge valve.
	c) The non-return valve is leaking or stuck half-open.	Pull out the pump and clean/replace the non-return valve.
	d) The volume of air in the pressure/diaphragm tank is too small.	Adjust the volume of air in the pressure/diaphragm tank in accordance with its installation and operating instructions.
	e) The pressure/diaphragm tank is too small.	Increase the capacity of the pressure/diaphragm tank by replacing or supplementing with another tank.
	f) The diaphragm of the diaphragm tank is defective.	Check the diaphragm tank.

9. Checking of motor and cable

1. Supply voltage 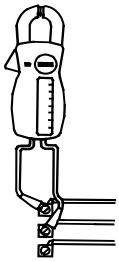 TM00 1371 5092	Measure the voltage between the phases by means of a voltmeter. On single-phase motors, measure between phase and neutral or between two phases, depending on the type of supply. Connect the voltmeter to the terminals in the motor starter.	The voltage should, when the motor is loaded, be within the range specified in section *4.1 General*. The motor may burn if there are larger variations in voltage. Large variations in voltage indicate poor electricity supply, and the pump should be stopped until the defect has been remedied.
2. Current consumption 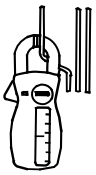 TM00 1372 5092	Measure the amps of each phase while the pump is operating at a constant discharge head (if possible, at the capacity where the motor is most heavily loaded). For maximum operating current, see nameplate.	On three-phase motors, the difference between the current in the phase with the highest consumption and the current in the phase with the lowest consumption should not exceed 5%. If so, or if the current exceeds the full load current, there are the following possible faults: • The contacts of the motor starter burnt. Replace the contacts or the control box for single-phase operation. • Poor connection in leads, possibly in the cable joint. See item 3. • Too high or too low supply voltage. See item 1. • The motor windings are short-circuited or partly disjointed. See item 3. • Damaged pump is causing the motor to be overloaded. Pull out the pump for overhaul. • The resistance value of the motor windings deviates too much (three-phase). Move the phases in phase order to a more uniform load. If this does not help, see item 3.
Items 3 and 4: Measurement is not necessary when the supply voltage and the current consumption are normal.		
3. Winding resistance 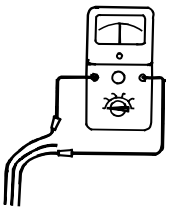 TM00 1373 5092	Disconnect the submersible drop cable at the motor starter. Measure the winding resistance between the leads of the drop cable.	For three-phase motors, the deviation between the highest and the lowest value should not exceed 10%. If the deviation is higher, pull out the pump. Measure motor, motor cable and drop cable separately, and repair/replace defective parts. **Note:** On single-phase, 3-wire motors, the operating winding will assume the lowest resistance value.
4. Insulation resistance 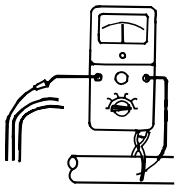 TM00 1374 5092	Disconnect the submersible drop cable at the motor starter. Measure the insulation resistance from each phase to earth (frame). Make sure that the earth connection is made carefully.	If the insulation resistance is less than 0.5 MΩ, the pump should be pulled out for motor or cable repair. Local regulations may specify other values for the insulation resistance.

10. Disposal

This product or parts of it must be disposed of in an environmentally sound way:

1. Use the public or private waste collection service.
2. If this is not possible, contact the nearest Grundfos company or service workshop.

Subject to alterations.

INHALTSVERZEICHNIS

1. Sicherheitshinweise

1.1 Allgemeines

Diese Montage- und Betriebsanleitung enthält grundlegende Hinweise, die bei Aufstellung, Betrieb und Wartung zu beachten sind. Sie ist daher unbedingt vor Montage und Inbetriebnahme vom Monteur sowie dem zuständigen Fachpersonal/Betreiber zu lesen. Sie muss ständig am Einsatzort der Anlage verfügbar sein.

Diese Montage- und Betriebsanleitung bezieht sich auf Unterwassermotoren der Baureihen Grundfos MS und MMS und Unterwasserpumpen der Baureihe Grundfos SP mit Unterwassermotoren der Baureihen Grundfos MS und MMS, Franklin 4"-8", Mercury 6"-12" und Pleuger 6"-12".

Bei anderen Motorfabrikaten als Grundfos MS oder MMS ist darauf zu achten, dass die aktuellen Motordaten von den in dieser Anleitung angeführten Daten abweichen können.

Es sind nicht nur die unter diesem Abschnitt "Sicherheitshinweise" aufgeführten, allgemeinen Sicherheitshinweise zu beachten, sondern auch die unter den anderen Abschnitten eingefügten, speziellen Sicherheitshinweise.

1.2 Kennzeichnung von Hinweisen

Die in dieser Montage- und Betriebsanleitung enthaltenen Sicherheitshinweise, die bei Nichtbeachtung Gefährdungen für Personen hervorrufen können, sind mit allgemeinem Gefahrensymbol "Sicherheitszeichen nach DIN 4844-W00" besonders gekennzeichnet.

Achtung ***Dieses Symbol finden Sie bei Sicherheitshinweisen, deren Nichtbeachtung Gefahren für die Maschine und deren Funktionen hervorrufen kann.***

Hinweis ***Hier stehen Ratschläge oder Hinweise, die das Arbeiten erleichtern und für einen sicheren Betrieb sorgen.***

Direkt an der Anlage angebrachte Hinweise wie z.B.

- Drehrichtungspfeil
- Kennzeichnung für Fluidanschlüsse

müssen unbedingt beachtet und in vollständig lesbarem Zustand gehalten werden.

1.3 Personalqualifikation und -schulung

Das Personal für Bedienung, Wartung, Inspektion und Montage muss die entsprechende Qualifikation für diese Arbeiten aufweisen. Verantwortungsbereich, Zuständigkeit und die Überwachung des Personals müssen durch den Betreiber genau geregelt sein.

1.4 Gefahren bei Nichtbeachtung der Sicherheitshinweise

Die Nichtbeachtung der Sicherheitshinweise kann sowohl eine Gefährdung für Personen als auch für die Umwelt und Anlage zur Folge haben. Die Nichtbeachtung der Sicherheitshinweise kann zum Verlust jeglicher Schadenersatzansprüche führen.

Im einzelnen kann Nichtbeachtung beispielsweise folgende Gefährdungen nach sich ziehen:

- Versagen wichtiger Funktionen der Anlage
- Versagen vorgeschriebener Methoden zur Wartung und Instandhaltung
- Gefährdung von Personen durch elektrische und mechanische Einwirkungen.

1.5 Sicherheitsbewusstes Arbeiten

Die in dieser Montage- und Betriebsanleitung aufgeführten Sicherheitshinweise, die bestehenden nationalen Vorschriften zur Unfallverhütung sowie eventuelle interne Arbeits-, Betriebs- und Sicherheitsvorschriften des Betreibers, sind zu beachten.

1.6 Sicherheitshinweise für den Betreiber/Bediener

- Ein vorhandener Berührungsschutz für sich bewegende Teile darf bei sich in Betrieb befindlicher Anlage nicht entfernt werden.
- Gefährdungen durch elektrische Energie sind auszuschließen (Einzelheiten hierzu siehe z.B. in den Vorschriften des VDE und der örtlichen Energieversorgungsunternehmen).

1.7 Sicherheitshinweise für Wartungs-, Inspektions- und Montagearbeiten

Der Betreiber hat dafür zu sorgen, dass alle Wartungs-, Inspektions- und Montagearbeiten von autorisiertem und qualifiziertem Fachpersonal ausgeführt werden, das sich durch eingehendes Studium der Montage- und Betriebsanleitung ausreichend informiert hat.

Grundsätzlich sind Arbeiten an der Pumpe nur im Stillstand durchzuführen. Die in der Montage- und Betriebsanleitung beschriebene Vorgehensweise zum Stillsetzen der Anlage muss unbedingt eingehalten werden.

Unmittelbar nach Abschluss der Arbeiten müssen alle Sicherheits- und Schutzeinrichtungen wieder angebracht bzw. in Funktion gesetzt werden.

D

1.8 Eigenmächtiger Umbau und Ersatzteilherstellung

Umbau oder Veränderungen an Pumpen sind nur nach Absprache mit dem Hersteller zulässig. Originalersatzteile und vom Hersteller autorisiertes Zubehör dienen der Sicherheit. Die Verwendung anderer Teile kann die Haftung für die daraus entstehenden Folgen aufheben.

1.9 Unzulässige Betriebsweisen

Die Betriebssicherheit der gelieferten Pumpen ist nur bei bestimmungsgemäßer Verwendung entsprechend Abschnitt *3.1 Verwendungszweck* der Montage- und Betriebsanleitung gewähr-leistet. Die in den technischen Daten angegebenen Grenzwerte dürfen auf keinen Fall überschritten werden.

D

2. Lieferung und Lagerung

2.1 Lieferung

Grundfos Unterwasserpumpen werden werksseitig in einer zweckmäßigen Verpackung geliefert, in der sie bis zur Montage bleiben sollten.

Während des Auspackens und der Montage ist beim Hantieren mit der Pumpe Vorsicht geboten und ein Durchbiegen des Aggregates zu vermeiden.

Achtung ***Die Pumpen sollten solange in der Verpackung bleiben, bis sie während der Montage in die vertikale Stellung gebracht werden.***
Falls die Pumpe und der Motor als separate Einheiten (lange Pumpen) geliefert wurden, ist die Montage wie in Abschnitt 6.1 beschrieben vorzunehmen.

Hinweis ***Jede Pumpe wird mit einem zusätzlichen Leistungsschild geliefert, das am Montageort befestigt werden sollte.***

Die Pumpe darf keinen unnötigen Erschütterungen ausgesetzt werden.

2.2 Lagerung und Transport

Lagertemperatur

Pumpe: –20°C bis +60°C.
Motor: –20°C bis +70°C.

Die Motoren müssen in einem trockenen, gut be- und entlüfteten Raum gelagert werden.

Achtung ***Bei MMS Motoren, die länger als ein Jahr gelagert werden, muss die Motorwelle einmal im Monat von Hand gedreht werden.***
Falls der Motor länger als ein Jahr vor dem Einbau gelagert wurde, müssen die rotierenden Teile des Motors vor Gebrauch demontiert und überprüft werden.

Lagerung in direktem Sonnenlicht ist zu vermeiden.

Falls die Pumpe ausgepackt ist, ist sie horizontal mit Abstützung oder vertikal zu lagern, damit sie keiner Biegebeanspruchung ausgesetzt wird. Es ist sicherzustellen, dass die Pumpe nicht rollen oder umkippen kann. Bei Lagerung kann die Pumpe wie in Abb. 1 gezeigt abgestützt werden.

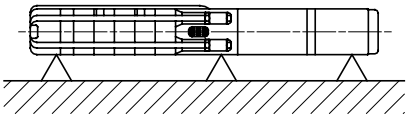

TM00 1349 2495

Abb. 1 Position der Pumpe während der Lagerung

2.2.1 Frostsicherung

Falls die Pumpe nach Gebrauch gelagert werden soll, muss der Lagerort frostfrei sein, oder es muss sichergestellt werden, dass die Motorflüssigkeit frostsicher ist. (Siehe auch Abschnitt *4.1 Kontrolle der Motorflüssigkeit*.)

3. Allgemeines

3.1 Verwendungszweck

Grundfos Unterwasserpumpen der Baureihe SP eignen sich für die:

- Trinkwasserversorgung in Städten und Gemeinden
- Wasserversorgung in Molkereien, Brauereien und Mineralwasserabfüller
- Hauswasserversorgung
- Grundwasserwärmepumpenanlagen
- Beregnungsanlagen in Gartenbau, Land- und Forstwirtschaft
- Springbrunnenanlagen, auch für horizontalen Einbau
- Druckerhöhungsanlagen mit Pumpe im Druckmantel
- Wasserhaltung in Tief- und Bergbau
- Wasserversorgung von industriellen Kühlkreisläufen.

Das Einlaufteil der Pumpe muss immer vollständig im Wasser eingetaucht sein. Die Pumpe lässt sich entweder horizontal oder vertikal einbauen. Nähere Informationen, siehe Abschnitt *4.2 Einbauanforderungen*.

3.2 Fördermedien

Reine, dünnflüssige, **nicht-explosive** Medien ohne feste oder langfaserige Bestandteile.

Der maximale Sandgehalt des Wassers darf 50 g/m^3 nicht übersteigen. Ein größerer Sandgehalt reduziert die Lebensdauer und erhöht die Gefahr, dass die Pumpe blockiert.

Hinweis ***Falls eine Flüssigkeit mit einer von Wasser abweichenden Dichte gefördert werden soll, ist wegen der Änderung der hydraulischen Leistung auf die dann erforderliche Motorleistung zu achten.***

Bei der Förderung von Flüssigkeiten mit einer von Wasser abweichenden Zähigkeit nehmen Sie bitte mit Grundfos Verbindung auf.

Bei der Förderung von Flüssigkeiten mit einer Aggressivität größer als der des Trinkwassers sind die Sonderausführungen SP A N, SP A R, SP N, SP R und SPE einzusetzen.

Die maximale Medientemperatur geht aus Abschnitt *4.4 Medientemperaturen/Motorkühlung* hervor.

3.3 Schalldruckpegel

Der Schalldruckpegel ist in Übereinstimmung mit den in der EG Maschinenrichtlinie 98/37/EG aufgeführten Richtlinien gemessen worden.

Schalldruckpegel der Pumpen

Gilt für Pumpen, die im Wasser eingetaucht sind, ohne externes Regelventil.

Pumpentyp	$\overline{L}_{pA}$ [dB(A)]
SP 1A	<70
SP 2A	<70
SP 3A	<70
SP 5A	<70
SP 8A	<70
SP 14A	<70
SP 17	<70
SP 30	<70
SP 46	<70
SP 60	<70
SP 77	<70
SP 95	<70
SP 125	79
SP 160	79
SP 215	82

Schalldruckpegel der Motoren

Der Schalldruckpegel der Grundfos MS und MMS Motoren liegt unter 70 dB(A).

Andere Motorfabrikate: Siehe Montage- und Betriebsanleitung dieser Motoren.

4. Montagevorbereitung

Vor Beginn der Arbeit an der Pumpe muss die Versorgungsspannung unbedingt abgeschaltet werden. Es muss sichergestellt werden, dass diese nicht versehentlich wieder eingeschaltet werden kann.

4.1 Kontrolle der Motorflüssigkeit

Die Unterwassermotoren werden werksseitig mit einer speziellen nicht-giftigen Flüssigkeit gefüllt, die bis zu –20°C frostsicher ist.

Hinweis ***Den Füllstand überprüfen und bei Bedarf Flüssigkeit nachfüllen.***

Achtung ***Normalerweise kann sauberes Wasser nachgefüllt werden (kein destilliertes Wasser). Falls Frostgefahr besteht, muss spezielle Grundfos Kühlflüssigkeit aufgefüllt werden.***

Die Flüssigkeit kann wie folgt nachgefüllt werden.

4.1.1 Grundfos Unterwassermotoren MS 4000 und MS 402

Der Einfüllstutzen befindet sich in den folgenden Positionen:

MS 4000: am oberen Ende des Motors.

MS 402: am Boden des Motors.

1. Unterwasserpumpe wie in Abb. 2 gezeigt stellen.
   Die Einfüllschraube muss der höchste Punkt des Motors sein.
2. Einfüllschraube entfernen.
3. Mit der Füllspritze Flüssigkeit in den Motor einfüllen, Abb. 2, bis diese aus der Einfüllöffnung austritt.
4. Einfüllschraube wieder einsetzen und fest anziehen, bevor die Stellung der Pumpe geändert wird.

Anzugsmomente:

MS 4000: 3,0 Nm.

MS 402: 2,0 Nm.

Die Unterwasserpumpe ist jetzt montagebereit.

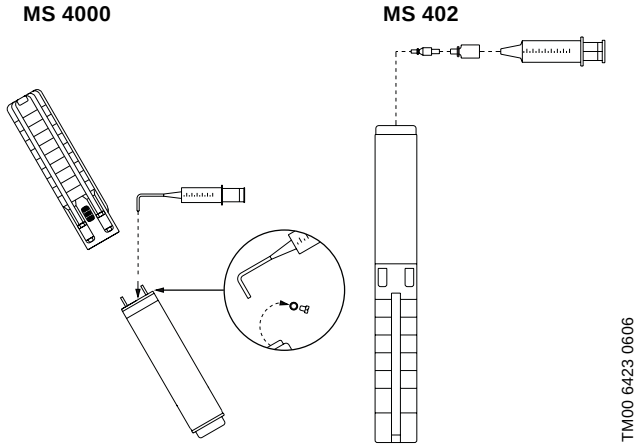

Abb. 2 Position der Pumpe während der Nachfüllung – MS 4000 und MS 402

4.1.2 Grundfos Unterwassermotoren MS 6000

- Falls der Motor ab Lager geliefert wurde, muss der Füllstand vor der Montage des Motors auf die Pumpe überprüft werden, siehe Abb. 3.
- Bei Pumpen, die direkt von Grundfos geliefert wurden, ist der Füllstand überprüft worden.
- Bei Servicearbeiten muss der Füllstand überprüft werden, siehe Abb. 3.

Füllvorgang:

Der Einfüllstutzen befindet sich am oberen Ende des Motors.

1. Unterwasserpumpe wie in Abb. 3 gezeigt stellen.
   Die Einfüllschraube muss der höchste Punkt des Motors sein.
2. Einfüllschraube entfernen.
3. Mit der Füllspritze Flüssigkeit in den Motor einfüllen, Abb. 3, bis diese aus der Einfüllöffnung austritt.
4. Einfüllschraube wieder einsetzen und fest anziehen, bevor die Stellung der Pumpe geändert wird.

Anzugsmoment: 3,0 Nm.

Die Unterwasserpumpe ist jetzt montagebereit.

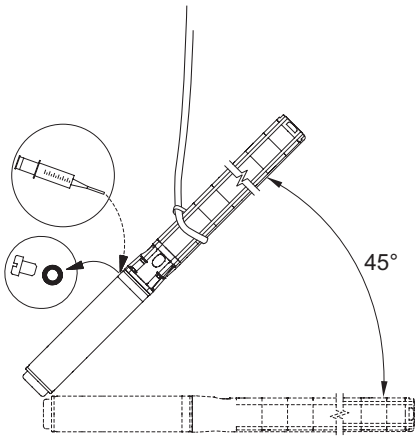

Abb. 3 Position der Pumpe während der Nachfüllung – MS 6000

4.1.3 Grundfos Unterwassermotoren MMS 6000, MMS 8000, MMS 10000 und MMS 12000

Füllvorgang:

1. Den Motor mit einem Neigungswinkel von 45° anbringen. Der obere Teil des Motors muss nach oben zeigen, siehe Abb. 4.
2. Den Stopfen A entfernen und einen Trichter in die Öffnung einführen.
3. Leitungswasser in den Motor einfüllen, bis die Flüssigkeit im Motor bei A austritt.
   Achtung: Motorflüssigkeit darf nicht verwendet werdet, da sie Öl enthält.
4. Den Trichter entfernen und den Stopfen A einsetzen und fest anziehen.

Achtung ***Nach längerer Lagerung muss die Wellenabdichtung vor der Montage des Motors auf die Pumpe geschmiert werden. Dazu die Abdichtung mit ein paar Tropfen Wasser anfeuchten und die Welle drehen.***

Die Unterwasserpumpe ist jetzt montagebereit.

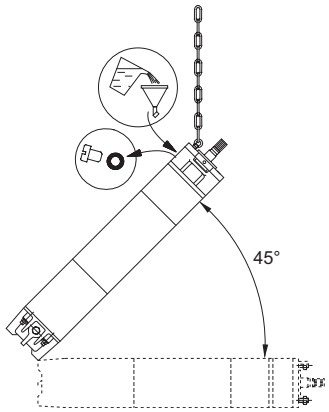

Abb. 4 Position des Motors während der Nachfüllung – MMS

D

D

4.1.4 Franklin Unterwassermotoren ab 3 kW

Der Füllstand der Motorflüssigkeit in Franklin 4" und 6" Unterwassermotoren ist durch Messen des Abstandes vom Endstück zur eingebauten Gummimembrane zu prüfen. Zur Kontrolle einen Prüfstift durch die Bohrung im Endstück einführen, bis ein Widerstand spürbar wird, Abb. 5.

Achtung ***Nicht zu stark drücken, um eine Beschädigung der Gummimembrane zu vermeiden.***

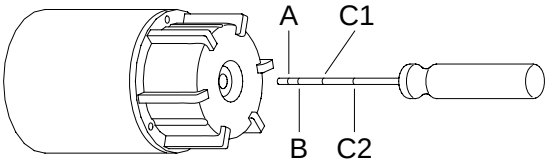

TM00 1353 5092

Abb. 5 Messen des Abstandes vom Endstück zur eingebauten Gummimembrane

Der gemessene Abstand von der Außenseite des Endstückes bis zur Membrane muss betragen bei:

Motor	Maß	Abstand
Franklin 4", 0,25 bis 3 kW (siehe Abb. 6a)	A	8 mm
Franklin 4", 3 bis 7,5 kW (siehe Abb. 6b)	B	16 mm
Franklin 6", 4 bis 45 kW (siehe Abb. 6c)	C1	35 mm
Franklin 6", 4 bis 22 kW (siehe Abb. 6d)	C2	59 mm

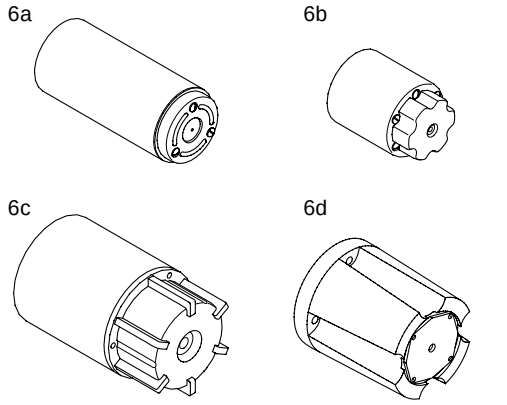

TM00 6422 3695

Abb. 6 Franklin Unterwassermotoren

Ist der Abstand nicht korrekt, muss eine Einstellung wie im Abschnitt *4.1.5 Franklin Unterwassermotoren* beschrieben ausgeführt werden.

4.1.5 Franklin Unterwassermotoren

Den Füllstand der Motorflüssigkeit in Franklin 8" Unterwassermotoren wie folgt prüfen bzw. korrigieren:

1. Mit einem Schraubendreher den Filter, der vor dem Ventil im oberen Lagergehäuse sitzt, heraushebeln. Hat der Filter einen Schlitz, ist er herauszuschrauben. Die Position des Einfüllventils ist der Abb. 7 zu entnehmen.
2. Füllspritze gegen das Ventil drücken und Flüssigkeit einspritzen, Abb. 7. Jeder übermäßige Druck mit der Spritze auf das Ventil ist zu vermeiden, um dieses nicht zu beschädigen. Das ist besonders wichtig, weil ein beschädigtes Ventil undicht sein kann.
3. Die Luft aus dem Motor entweicht automatisch dadurch, dass die Spitze der Füllspritze leicht gegen das Ventil gedrückt wird.
4. Flüssigkeitseinspritzen und Luftablassen sooft wiederholen, bis die Flüssigkeit austritt oder bis die Membrane sich in der richtigen Stellung befindet (Franklin 4" und 6").
5. Filter montieren.

Die Unterwasserpumpe ist jetzt montagebereit.

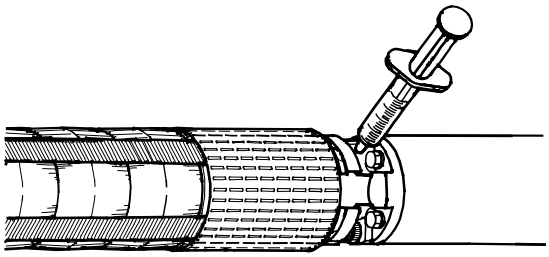

TM00 1354 5092

Abb. 7 Position des Einfüllventils

4.1.6 Mercury Unterwassermotoren

Der Füllstand der Motorflüssigkeit ist wie für Franklin 8" Motoren beschrieben zu prüfen, siehe Abschnitt *4.1.5 Franklin Unterwassermotoren*.

4.1.7 Pleuger Unterwassermotoren

Der Füllstand der Motorflüssigkeit ist wie für Franklin 8" Motoren beschrieben zu prüfen, siehe Abschnitt *4.1.5 Franklin Unterwassermotoren*.

4.2 Einbauanforderungen

Falls die Pumpe in eine zugängliche Lage eingebaut werden soll, muss die Kupplung mit einer Schutzvorrichtung versehen werden (z.B. Kühlmantel).

Abhängig vom Motortyp lässt sich die Pumpe entweder vertikal oder horizontal einbauen. Die Tabelle in Abschnitt *4.2.1* zeigt alle Motortypen, die für den horizontalen Einbau geeignet sind.

Falls die Pumpe horizontal eingebaut wird, **darf** der Druckanschluss sich **nie** unter der horizontalen Lage befinden, siehe 8.

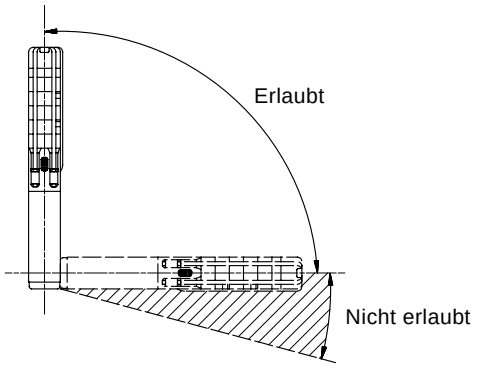

TM00 1355 5092

Abb. 8 Einbauanforderungen

Wird die Pumpe horizontal eingebaut, z.B. in einen Behälter, empfiehlt es sich, die Pumpe in einen Kühlmantel zu montieren.

4.2.1 Motoren für horizontalen Einbau

Motortyp	Motorleistung 50 Hz	Motorleistung 60 Hz
	[kW]	[kW]
MS	Alle Größen	Alle Größen
MMS 6000	3,7 bis 18,5	3,7 bis 18,5
MMS 8000	22,0 bis 63,0	22,0 bis 63,0
MMS 10000	75,0 bis 110,0	75,0 bis 110,0
MMS 12000	147,0 bis 190,0	–

Falls Franklin 4" Unterwassermotoren bis einschließlich 2,2 kW mehr als zehnmal pro Tag eingeschaltet werden, empfiehlt es sich, den Motor mindestens 15° über der horizontalen Lage einzubauen, um den Verschleiß der Upthrust-Scheibe zu verringern.

Achtung ***Während des Betriebes muss das Einlaufteil der Pumpe immer vollständig im Wasser eingetaucht sein.***

Falls die Pumpe für die Förderung von heißen Medien (40° bis 60°C) eingesetzt wird, sollten die Pumpe und die Installation abgeschirmt werden, um Verletzungen durch Berührung zu vermeiden.

4.3 Pumpen-/Motordurchmesser

Der maximale Pumpen-/Motordurchmesser ist den Tabellen auf den Seiten 146 und 147 zu entnehmen.

Vor dem Einbau der Pumpe empfiehlt es sich, das Bohrloch mit einem Kaliber auf freien Durchgang zu prüfen.

4.4 Medientemperaturen/Motorkühlung

Die maximale Medientemperatur und die minimale Strömungsgeschwindigkeit am Motor gehen aus der nachstehenden Tabelle hervor.

Es empfiehlt sich, den Motor oberhalb des Brunnenfilters einzubauen, um die optimale Motorkühlung sicherzustellen.

Hinweis ***Kann die angeführte Strömungsgeschwindigkeit nicht erreicht werden, ist ein Kühlmantel erforderlich.***

Falls sich Sand oder Schlamm um den Motor ansammeln kann, muss ebenfalls zur Sicherstellung der Motorkühlung ein Kühlmantel installiert werden.

4.4.1 Max. Medientemperatur

Aus Rücksicht auf die Gummiteile der Pumpe und des Motors darf die Medientemperatur nicht 40°C (~105°F) übersteigen. Siehe auch die nachstehende Tabelle.

Betrieb bei Medientemperaturen zwischen 40°C und 60°C (~105°F und 140°F) ist möglich, falls alle Gummiteile alle drei Jahre ausgewechselt werden.

Motor	Installation		
	Strömung am Motor vorbei	**Vertikal**	**Horizontal**
Grundfos MS und MMS	**Freie Konvektion 0 m/s**	20°C (~68°F)	Kühlmantel empfohlen
Grundfos MS	**0,15 m/s**	40°C (~105°F)	40°C (~105°F)
Grundfos MS I *	**0,15 m/s**	60°C (~140°F) Kühlmantel empfohlen	60°C (~140°F) Kühlmantel empfohlen
Grundfos MMS	**0,15 m/s**	25°C (~77°F)	25°C (~77°F)
Franklin 4"	**0,08 m/s**	30°C (~85°F)	30°C (~85°F)
Franklin 6" und 8"	**0,16 m/s**	30°C (~85°F)	30°C (~85°F)
Mercury	**0,15 m/s**	25°C (~77°F)	25°C (~77°F)
Pleuger	**0,5 m/s**	30°C (~86°F)	30°C (~86°F)

* Bei einem Umgebungsdruck von min. 1 bar (1 MPa)

Achtung ***Unter freier Konvektion ist zu verstehen, dass der Durchmesser des Brunnens mindestens 2" größer ist als der des Unterwassermotors.***

Andere Motorfabrikate: Siehe entsprechende Spezifikation dieser Motoren.

4.5 Rohranschluss

Falls Geräusche Probleme bereiten, empfiehlt es sich, Kunststoffrohre zu verwenden.

Achtung ***Verwendung nur für 4" Pumpen zulässig.***

Die Pumpe muss dann mit Hilfe eines Stahlseils gesichert werden.

Es ist sicherzustellen, dass die Kunststoffrohre der aktuellen Medientemperatur und dem Förderdruck der Pumpe standhalten können.

Wenn die Pumpe mit Kunststoffrohren verbunden wird, muss eine Quetschkupplung verwendet werden.

5. Elektrischer Anschluss

Vor Beginn der Arbeit an der Pumpe muss die Versorgungsspannung unbedingt abgeschaltet werden. Es muss sichergestellt werden, dass diese nicht versehentlich wieder eingeschaltet werden kann.

5.1 Allgemeines

Der elektrische Anschluss muss durch einen Fachmann in Übereinstimmung mit den örtlichen Vorschriften des EVU bzw. VDE vorgenommen werden.

Angaben über Versorgungsspannung, aufgestempelten max. Strom und cos φ sind auf dem mit der Pumpe gelieferten Leistungsschild abzulesen, das am Montageort befestigt werden **muss**.

Der erforderliche Spannungsbereich für Grundfos Unterwassermotoren **MS** und **MMS**, an den Motorklemmen gemessen, beträgt –10%/+6% der Nennspannung bei Dauerbetrieb (einschließlich Toleranzen in der Versorgungsspannung und Verlusten in den Kabeln).

Die Netzversorgung muss Spannungssymmetrie aufweisen, d.h. gleicher Spannungsunterschied zwischen den einzelnen Phasen. Siehe auch Abschnitt *10. Motor- und Kabelkontrolle*, Punkt 2.

Die Pumpe muss geerdet werden.

Die Pumpe muss bauseits abgesichert werden und sollte an einen externen Netzschalter angeschlossen werden. Auf eine allpolige Trennung mit Kontaktöffnungsweite von min. 3 mm (pro Pol) ist zu achten.

Damit die Grundfos MS Motoren mit eingebautem Temperaturgeber (Tempcon), die nicht zusammen mit einem MP 204 oder einem ähnlichen Grundfos Motorschutzschalter montiert sind, die EG EMV-Richtlinie (89/336/EWG) erfüllen können, muss ein 0,47 μF Kondensator (gemäß IEC 384-14) unbedingt über die beiden Motorphasen gelegt werden, an die der Temperaturgeber angeschlossen ist, siehe Abb. 9.

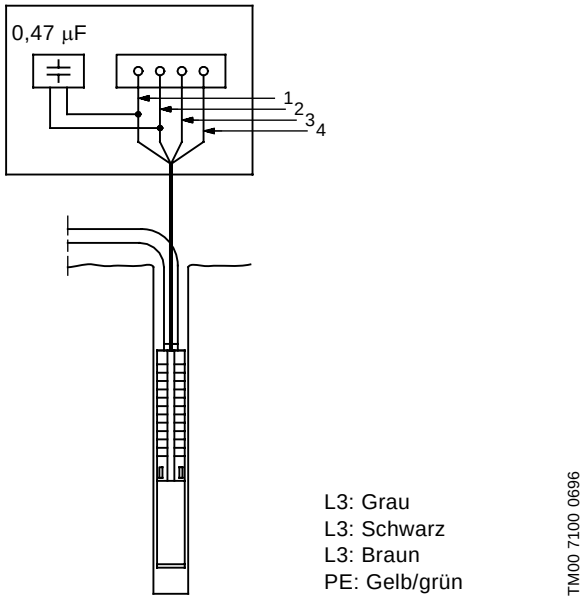

Abb. 9 Anschluss des Kondensators

D

Die Motoren sind für Direkt- oder Stern-Dreieck-Anlauf gewickelt. Der Anlaufstrom beträgt das 4-6fache des Motor-Vollaststromes.

Die Anlaufzeit beträgt ca. 0,1 Sek. Direktanlauf wird daher normalerweise von den Elektrizitäts-Versorgungsunternehmen zugelassen.

5.1.1 Frequenzumrichterbetrieb

Grundfos Motoren

Grundfos Drehstrommotoren können an einen Frequenzumrichter angeschlossen werden.

D

Achtung ***Grundfos MS Motoren mit Temperaturgeber dürfen nicht an einen Frequenzumrichter angeschlossen werden, da in diesem Fall die Sicherung im Temperaturgeber anspricht und diesen außer Funktion setzt. Er lässt sich danach nicht wieder aktivieren. Der Motor funktioniert dann wie ein Motor ohne Temperaturgeber.***

Falls ein Temperaturgeber erforderlich ist, ist ein Pt100 Sensor zur Montage auf den Unterwassermotor bei Grundfos erhältlich.

Bei Frequenzumrichterbetrieb ist es nicht empfehlenswert, den Motor mit einer Frequenz zu betreiben, die über der Nennfrequenz (50 oder 60 Hz) liegt. Zur Sicherstellung der Motorkühlung ist es bei Pumpenbetrieb sehr wichtig, dass die minimale Frequenz (und dadurch die Drehzahl) immer so hoch eingestellt wird, dass ausreichend Flüssigkeit am Motor vorbeiströmt.

Um eine Beschädigung des Pumpenteils zu vermeiden, muss sichergestellt werden, dass der Motor stoppt, wenn der Förderstrom unter 0,1 x Nennförderstrom liegt.

Der Frequenzumrichter kann, abhängig vom Typ, verursachen, dass der Motor schädlichen Spannungsspitzen ausgesetzt wird.

Motoren MS 402 für Versorgungsspannungen bis einschließlich 440 V (siehe Leistungsschild des Motors) müssen gegen Spannungsspitzen über 650 V (Spitzenwert) zwischen den Anschlussklemmen geschützt werden.

Übrige Motoren müssen gegen Spannungsspitzen über 850 V geschützt werden.

Die obige Störung lässt sich durch die Montage eines **RC-Filters** zwischen dem Frequenzumrichter und dem Motor vermeiden.

Evtl. erhöhte Motorgeräusche können durch die Montage eines **LC-Filters** gedämpft werden. Weiterhin wird dieser Filter auch die Spannungsspitzen vom Frequenzumrichter reduzieren.

Für nähere Informationen nehmen Sie bitte mit dem Frequenzumrichter-Lieferanten oder Grundfos Verbindung auf.

Andere Motorfabrikate als Grundfos

Nehmen Sie bitte mit Grundfos oder dem Motorhersteller Verbindung auf.

5.2 Motorschutz

5.2.1 Einphasenmotoren

Einphasenmotoren MS 402 besitzen einen eingebauten Thermoschalter und benötigen keinen weiteren Motorschutz.

Falls der Motor thermisch abgeschaltet wurde, stehen die Motorklemmen unter Spannung. Nach ausreichender Abkühlung schaltet der Motor automatisch wieder ein.

Einphasenmotoren MS 4000 müssen an einen Motorschutz angeschlossen werden. Der Motorschutz kann entweder in einem Schaltkasten eingebaut oder getrennt montiert sein.

Franklin 4" Motoren PSC müssen an einen Motorschutzschalter angeschlossen werden.

5.2.2 Drehstrommotoren

Grundfos **MS** Motoren sind mit oder ohne eingebauten Temperaturgeber erhältlich.

Motoren **mit** eingebautem und funktionsfähigem Temperaturgeber müssen wie folgt geschützt werden:

- über Motorschutzschalter mit Thermorelais oder
- über MTP 75 und Motorschutzschalter mit Thermorelais oder
- über MP 204 und Schütz(e).

Motoren **ohne** oder **mit nicht**-funktionsfähigem Temperaturgeber müssen wie folgt geschützt werden:

- über Motorschutzschalter mit Thermorelais oder
- über MP 204 und Schütz(e).

Grundfos **MMS** Motoren haben keinen eingebauten Temperaturgeber. Ein Pt100 Sensor ist als Zubehör erhältlich.

Motoren **mit** Pt100 Sensor müssen wie folgt geschützt werden:

- über Motorschutzschalter mit Thermorelais oder
- über MP 204 und Schütz(e).

Motoren **ohne** Pt100 Sensor müssen wie folgt geschützt werden:

- über Motorschutzschalter mit Thermorelais oder
- über MP 204 und Schütz(e).

5.2.3 Einstellung des Motorschutzschalters

Der in den Motorschutzschalter eingebaute Überstromauslöser muss bei Kaltstart in weniger als 10 Sek. bei 5fachem des aufgestempelten max. Motorstromes auslösen.

Achtung ***Wenn die Auslösecharakteristik des Motorschutzschalters diese Anforderungen nicht erfüllt, ist die Motorgewährleistung hinfällig.***

Um dem Unterwassermotor den bestmöglichen Schutz zu bieten, sollte die Einstellung des Motorschutzschalters nach den folgenden Richtlinien ausgeführt werden:

1. Überstromauslöser auf den aufgestempelten max. Motorstrom einstellen.
2. Pumpe eine halbe Stunde bei Normalleistung laufen lassen.
3. Überstromauslöser schrittweise niedriger einstellen, bis der Auslösepunkt erreicht ist.
4. Überstromauslöser danach 5% über diesen Auslösepunkt einstellen.

Der maximale Einstellwert des Überstromauslösers darf den aufgestempelten max. Motorstrom nicht überschreiten.

Bei Motoren, die für Stern-Dreieck-Anlauf gewickelt sind, ist die Einstellung des Motorschutzschalters wie oben beschrieben vorzunehmen, die Schutzschaltereinstellung darf jedoch maximal betragen:

Schutzschaltereinstellung = Aufgestempelter max. Strom x 0,58.

Die maximal zulässige Anlaufzeit bei Stern-Dreieck-Anlasser oder bei Motorschalter mit Anlasstrafo beträgt 2 Sek.

5.3 Blitzschutz

Die Installation kann mit einer speziellen Überspannungs-Schutzeinrichtung versehen werden, welche den Motor gegen atmosphärische Überspannungen sowie gegen nahe gelegene Blitzeinschläge schützt, siehe Abb. 10.

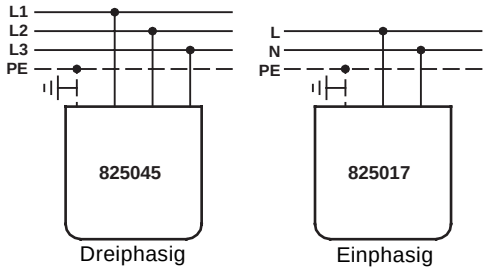

TM00 1357 3605

Abb. 10 Montage einer Überspannungs-Schutzeinrichtung

Die Überspannungs-Schutzeinrichtung schützt jedoch nicht gegen ***direkten*** Blitzschlag.

Die Überspannungs-Schutzeinrichtung muss so dicht wie möglich am Motor angeschlossen werden. Die entsprechenden örtlichen Bestimmungen sind zu beachten.
Überspannungs-Schutzeinrichtungen sind von Grundfos lieferbar.

Das Isolationsniveau des Unterwassermotors MS 402 ist jedoch so hoch, dass ein weiterer Blitzschutz nicht erforderlich ist.

Für Grundfos 4" Unterwassermotoren kann eine spezielle Kabelkupplung mit eingebauter Überspannungs-Schutzeinrichtung geliefert werden (Teilnr. 799911 / 799912).

5.4 Kabelauslegung

Da das Unterwasserkabel ständig eingetaucht ist, muss es dem aktuellen Fördermedium sowie dessen Temperatur standhalten können.

Grundfos Unterwasserkabel sind für viele verschiedene Installationen lieferbar.

Bei der Berechnung des Kabelquerschnittes (q) müssen die folgenden Anforderungen erfüllt sein:

1. Das Unterwasserkabel muss für den aufgestempelten max. Motorstrom (I) ausgelegt sein.
2. Der Querschnitt muss so groß gewählt werden, dass der Spannungsabfall über dem Kabel in den zulässigen Grenzen liegt.

Die unter Punkt 1. und 2. erhaltenen Querschnitte vergleichen und den größeren Querschnitt wählen.

Zu 1: Die nachstehende Tabelle zeigt die Überstrombelastbarkeit der Grundfos Unterwasserkabel (d.h. den maximalen Strom, für den das Kabel ausgelegt ist) bei einer Umgebungstemperatur von max. 30°C.
Bei Umgebungstemperaturen über 30°C nehmen Sie bitte mit Grundfos Verbindung auf.

Das Unterwasserkabel muss so gewählt werden, dass der aufgestempelte max. Motorstrom die Überstrombelastbarkeit (I_S) nicht übersteigt.

Bei Stern-Dreieck-Anlauf sind die Kabel jedoch so zu wählen, dass der Nennstrom x 0,58 nicht die Überstrombelastbarkeit (I_S) übersteigt.

q [mm^2]	I_S [A]	q [mm^2]	I_S [A]
1,5	18,5	50	153
2,5	25	70	196
4	34	95	238
6	43	120	276
10	60	150	319
16	80	185	364
25	101	240	430
35	126	300	497

Werden andere Fabrikate von Unterwasserkabeln eingesetzt, ist der Kabelquerschnitt aufgrund der Überstrombelastbarkeit der verwendeten Kabel zu wählen.

Zu 2:
Hinweis: Die Anforderungen an den Spannungsbereich der Motoren müssen erfüllt sein, siehe Abschnitt *5.1 Allgemeines*.

Mit dem Spannungsabfall kann der erforderliche Kabelquerschnitt für die tatsächlich benötigte Kabellänge aus den Diagrammen auf den Seiten 148 und 149 ermittelt werden.

I = Aufgestempelter max. Motorstrom.
Bei Stern-Dreieck-Anlauf ist
I = Aufgestempelter max. Motorstrom x 0,58.

Lx = Kabellänge in einen Spannungsabfall von 1% der Nennspannung umgerechnet.

$$Lx = \frac{\text{Kabellänge}}{\text{zulässiger Spannungsabfall in \%}}$$

q = Querschnitt des Unterwasserkabels.

Eine gerade Linie zwischen dem I-Wert und dem Lx-Wert ziehen. Wo die Linie die q-Achse schneidet, muss der nächstgrößere Querschnitt gewählt werden.

Die Diagramme sind nach den folgenden Formeln ausgeführt:

Einphasenmotor

$$L = \frac{U \times \Delta U}{I \times 2 \times 100 \times \left(\cos\varphi \times \frac{\rho}{q} + \sin\varphi \times XI\right)}$$

Drehstrommotor

$$L = \frac{U \times \Delta U}{I \times 1{,}73 \times 100 \times \left(\cos\varphi \times \frac{\rho}{q} + \sin\varphi \times XI\right)}$$

L = Kabellänge [m]
U = Nennspannung [V]
ΔU = Spannungsabfall [%]
I = Aufgestempelter max. Motorstrom [A]
cos φ = 0,9
ρ = Spezifischer Widerstand: 0,02 [$\Omega mm^2/m$]
q = Kabelquerschnitt [mm^2]
sin φ = 0,436
XI = Induktiver Widerstand: 0,078 x 10^{-3} [Ω/m]

5.5 Steuerung der Einphasenmotoren MS 402

Diese Motoren besitzen einen eingebauten Motorschutz, der bei zu hoher Wicklungstemperatur den Motor ausschaltet. Die Spannungsversorgung ist in diesem Fall jedoch nicht abgeschaltet. Dieses muss berücksichtigt werden, wenn der Motor Teil einer Steuerung ist.

Ist z.B. ein Kompressor in Verbindung mit einem Ockerfilter Teil einer Steuerung, wird der Kompressor weiterlaufen, wenn der Motorschutz den Motor ausgeschaltet hat und keine zusätzlichen Maßnahmen getroffen worden sind.

5.6 Anschluss der Einphasenmotoren

5.6.1 Motoren der zweiadrigen Ausführung

Grundfos Motoren MS 402 der zweiadrigen Ausführung besitzen einen eingebauten Motorschutz und eine Startvorrichtung und lassen sich deshalb direkt ans Netz anschließen, siehe Abb. 11.

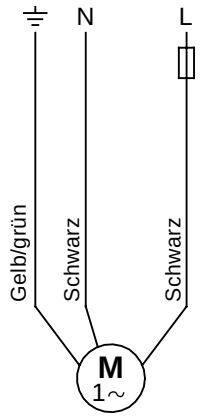

TM00 1358 5092

Abb. 11 Motoren der zweiadrigen Ausführung

5.6.2 PSC Motoren

PSC Motoren sind über einen Betriebskondensator ans Netz anzuschließen. Dieser Kondensator muss für Dauerbetrieb ausgelegt sein.

Die korrekte Kondensatorgröße lässt sich aufgrund der nachstehenden Tabelle wählen:

Motor	Kondensator
0,25 kW	12,5 µF / 400 V / 50 Hz
0,37 kW	16 µF / 400 V / 50 Hz
0,55 kW	20 µF / 400 V / 50 Hz
0,75 kW	30 µF / 400 V / 50 Hz
1,10 kW	40 µF / 400 V / 50 Hz
1,50 kW	50 µF / 400 V / 50 Hz
2,20 kW	75 µF / 400 V / 50 Hz

D

Grundfos Motoren MS 402 PSC besitzen einen eingebauten Motorschutz und sind wie in Abb. 12 gezeigt ans Netz anzuschließen.

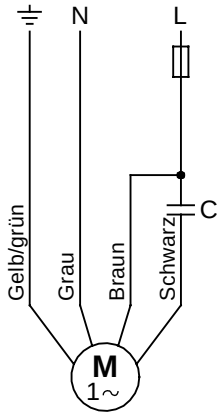

TM00 1359 5092

Abb. 12 PSC Motoren

Siehe www.franklin-electric.com und Abb. 13.

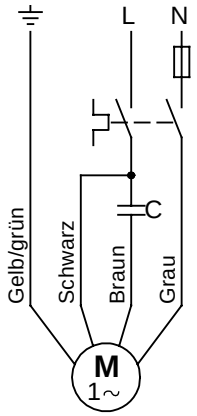

TM00 1361 1200

Abb. 13 Franklin Unterwassermotoren

5.6.3 Motoren der dreiadrigen Ausführung

Grundfos Motoren MS 4000 der dreiadrigen Ausführung müssen über einen Grundfos Schaltkasten SA-SPM 2 oder 3 mit eingebautem Motorschutz angeschlossen werden.

Grundfos Motoren MS 402 der dreiadrigen Ausführung besitzen einen eingebauten Motorschutz und müssen über einen Grundfos Schaltkasten SA-SPM 2 oder 3 ohne Motorschutz ans Netz angeschlossen werden.

Der Anschluss der Motoren MS 4000 und MS 402 geht aus der nachstehenden Tabelle hervor:

Motor	Kabel	Schaltkasten	Netz
Bis 0,75 kW	Grau Braun Schwarz Gelb/grün	1 N 2 L 3 SA-SPM 2	N L PE
Ab 1,10 kW	Grau Braun Schwarz Gelb/grün	1 N 2 L 3 SA-SPM 3	N L PE

5.7 Anschluss der Drehstrommotoren

Für alle Drehstrommotoren ist ein Motorschutz erforderlich, siehe Abschnitt *5.2.2 Drehstrommotoren*.

Für den elektrischen Anschluss des MP 204, siehe Montage- und Betriebsanleitung für diese Einheit.

Bei der Verwendung eines herkömmlichen Motorschutzschalters ist der elektrische Anschluss wie folgt vorzunehmen.

5.7.1 Kontrolle der Drehrichtung

Achtung ***Die Pumpe darf nur eingeschaltet werden, wenn das Einlaufteil vollständig im Fördermedium eingetaucht ist.***

Wenn die Pumpe ans Netz angeschlossen ist, kann eine Drehrichtungskontrolle wie folgt vorgenommen werden:

1. Pumpe einschalten und Wassermenge und Förderhöhe prüfen.
2. Pumpe ausschalten und zwei Phasen zum Motor vertauschen. Bei Motoren für Stern-Dreieck-Anlauf müssen U1 mit V1 und U2 mit V2 vertauscht werden.
3. Pumpe einschalten und Wassermenge und Förderhöhe prüfen.
4. Pumpe ausschalten.
5. Die unter Punkt 1. und 3. erhaltenen Resultate vergleichen. Die Drehrichtung, die die größere Wassermenge und Förderhöhe ergibt, ist die richtige.

5.7.2 Grundfos Motoren, Direktanlauf

Der Anschluss der für Direktanlauf gewickelten Grundfos Motoren geht aus der nachstehenden Tabelle und Abb. 14 hervor.

Netz	Motorkabel/-anschluss
	Grundfos 4" und 6" Motoren
PE	PE (gelb/grün)
L1	U (braun)
L2	V (schwarz)
L3	W (grau)

Die Drehrichtungskontrolle ist wie im Abschnitt *5.7.1 Kontrolle der Drehrichtung* beschrieben vorzunehmen.

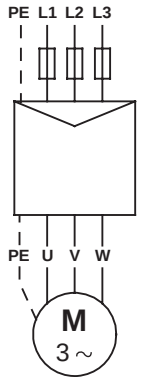

TM03 2099 3705

Abb. 14 Grundfos Motoren, Direktanlauf

5.7.3 Grundfos Motoren, Stern-Dreieck-Anlauf

Der Anschluss der für Stern-Dreieck-Anlauf gewickelten Grundfos Motoren geht aus der nachstehenden Tabelle und Abb. 15 hervor.

Anschluss	Grundfos 6" Motoren
PE	Gelb/grün
U1	Braun
V1	Schwarz
W1	Grau
W2	Braun
U2	Schwarz
V2	Grau

Die Drehrichtungskontrolle ist wie im Abschnitt *5.7.1 Kontrolle der Drehrichtung* beschrieben vorzunehmen.

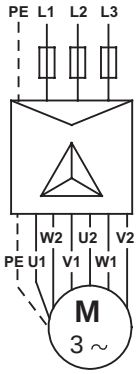

TM03 2100 3705

Abb. 15 Grundfos Motoren, Stern-Dreieck-Anlauf

Falls Stern-Dreieck-Anlauf nicht gewünscht ist sondern Direktanlauf, sind die Unterwassermotoren wie in Abb. 16 gezeigt anzuschließen.

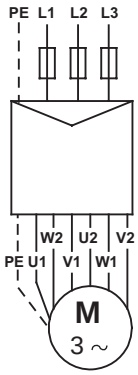

TM03 2101 3705

Abb. 16 Grundfos Motoren, Direktanlauf

5.7.4 Anschluss bei unbekannter Kabelmarkierung/ Anschluss

Sind die einzelnen Leiter, die so ans Netz angeschlossen werden sollen, um die richtige Drehrichtung zu erreichen, nicht entsprechend markiert, ist die folgende Vorgehensweise erforderlich:

Motoren für Direktanlauf

Pumpe ans Netz anschließen.

Eine Drehrichtungskontrolle wie im Abschnitt *5.7.1 Kontrolle der Drehrichtung* beschrieben vornehmen.

Motoren für Stern-Dreieck-Anlauf

Die Motorwicklungen werden mit Hilfe eines Ohmmeters ermittelt und die Leitersätze der einzelnen Wicklungen werden mit U1-U2, V1-V2 und W1-W2 bezeichnet, siehe Abb. 17.

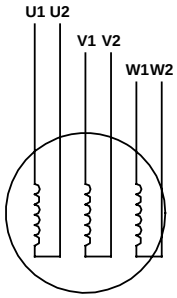

TM00 1367 5092

Abb. 17 Unbekannte Kabelmarkierung/Anschluss – Motoren für Stern-Dreieck-Anlauf

Falls Stern-Dreieck-Anlauf gewünscht ist, sind die Leiter wie in Abb. 15 gezeigt anzuschließen.

Falls Direktanlauf gewünscht ist, sind die Leiter wie in Abb. 16 gezeigt anzuschließen.

Die Drehrichtungskontrolle ist wie im Abschnitt *5.7.1 Kontrolle der Drehrichtung* beschrieben vorzunehmen.

5.7.5 Franklin, Mercury und Pleuger Motoren

Der Anschluss der Franklin, Mercury und Pleuger Motoren geht aus dem Abschnitt *5.7.4 Anschluss bei unbekannter Kabelmarkierung/ Anschluss* hervor.

6. Montage

Vor Beginn jeder Arbeit an der Pumpe oder am Motor muss die Versorgungsspannung unbedingt abgeschaltet werden. Es muss sichergestellt werden, dass diese nicht versehentlich wieder eingeschaltet werden kann.

D

6.1 Motor mit Pumpe verbinden

Falls die Pumpe und der Motor als separate Einheiten geliefert wurden (lange Pumpen), ist der Motor wie folgt mit der Pumpe zu verbinden:

1. Beim Hantieren des Motors Halseisen verwenden.
2. Den Motor in die vertikale Stellung am Brunnenkopf anbringen, siehe Abb. 18.

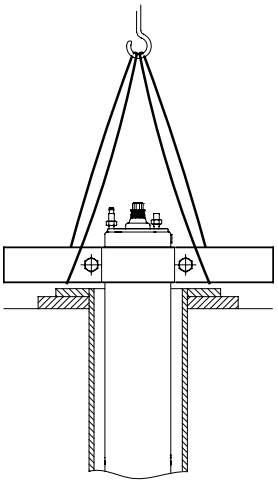

TM00 5259 2402

Abb. 18 Motor in vertikaler Position

3. Die Pumpe mit Hilfe der Halseisen am Verlängerungsrohr heben, siehe Abb. 19.

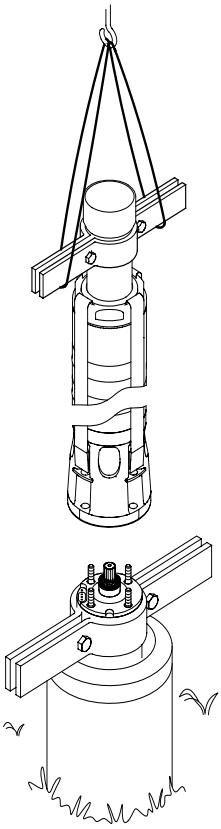

TM02 5263 2502

Abb. 19 Heben der Pumpe in die richtige Position

4. Die Pumpe auf dem Motor anbringen.
5. Muttern aufsetzen und fest anziehen, siehe nachstehende Tabelle.

Die Bolzen und Muttern, mit denen die Spannbänder an der Pumpe befestigt sind, müssen kreuzweise angezogen werden. Die hierfür erforderlichen Anzugsmomente sind in der nachstehenden Tabelle aufgeführt:

Spannband Bolzen/Mutter	Moment [Nm]
M8	18
M10	35
M12	45
M16	120
SP 215, 50 Hz, mit mehr als 8 Stufen SP 215, 60 Hz, mit mehr als 5 Stufen	150

Achtung ***Pumpe und Motor müssen verbunden sein.***

Bei der Montage des Motors auf die Pumpe sind die Muttern kreuzweise anzuziehen. Die hierfür erforderlichen Anzugsmomente sind in der nachstehenden Tabelle aufgeführt:

Pumpe/Motor Durchmesser der Stehbolzen	Moment [Nm]
M8	18
M12	70
M16	150
M20	280

Achtung ***Nachdem Motor und Pumpe verbunden sind, müssen die Kammern der Pumpe ausgerichtet werden.***

6.2 Demontage/Montage der Kabelschutzschiene

Für die Demontage und Montage der Kabelschutzschiene(n), siehe die Seiten 150 und 151.

Ist die Kabelschutzschiene mit Schrauben an der Pumpe befestigt (z.B. bei SP 215 und Pumpen in Mantel) ist die Kabelschutzschiene mit Hilfe von Schrauben zu demontieren/montieren.

Achtung ***Nach der Montage der Kabelschutzschiene müssen die Kammern der Pumpe ausgerichtet werden.***

6.3 Montage des Unterwasserkabels

6.3.1 Grundfos Unterwassermotoren

Vor der Montage des Unterwasserkabels am Motor muss sichergestellt werden, dass der Kabelstecker sauber und trocken ist.

Um die Montage zu erleichtern, sind die Gummiteile des Kabelsteckers mit einer nicht-leitenden Silikonpaste zu bestreichen.

Die Schrauben, die das Kabel festhalten, sind mit den nachstehenden Anzugsmomenten fest anzuziehen:

MS 402: 2,0 Nm.
MS 4000: 2,0 Nm.
MS 6000: 4,0-5,0 Nm.
MMS 6000: 10 Nm.
MMS 12000: 15 Nm.

6.4 Rohranschluss

Werden beim Anschluss des Steigrohres Werkzeuge benutzt (z.B. eine Ketten-Rohrzange), darf die Pumpe nur am Ventilgehäuse gespannt werden.

Die Gewinde der Schraubverbindungen dürfen sich nicht lösen, wenn sie dem durch das Stoppen und Anlaufen des Motors verursachten Gegendrehmoment ausgesetzt sind.

Das Gewinde des ersten Steigrohrstückes, das in die Pumpe eingeschraubt wird, darf nicht länger sein als das Gewinde im Ventilgehäuse der Pumpe.

Falls Geräusche Probleme bereiten, empfiehlt es sich, Kunststoffrohre zu verwenden.

Achtung ***Verwendung nur für 4" Pumpen zulässig.***

Bei Verwendung von Kunststoffrohren muss die Pumpe mit Hilfe eines Stahlseils gesichert werden, das am Ventilgehäuse der Pumpe befestigt wird, siehe Abb. 20.

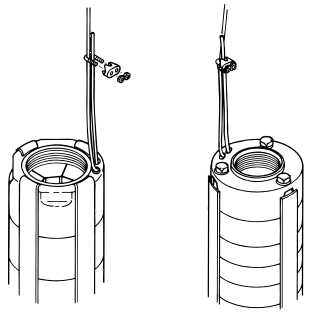

Abb. 20 Befestigung des Stahlseils

Wenn die Pumpe mit Kunststoffrohren verbunden wird, muss eine Quetschkupplung verwendet werden.

Wenn Flanschrohre benutzt werden, sollten die Flansche ausgespart werden, um das Unterwasserkabel und den Wasserstandsanzeigerschlauch (falls eingebaut) aufzunehmen.

6.5 Max. Einbautiefe unterhalb des Wasserspiegels

Grundfos MS 402: 150 m.
Grundfos MS 4000: 600 m.
Grundfos MS 6000: 600 m.
Grundfos MMS: 250 m.
Franklin Motoren: 350 m.
Mercury Motoren: 350 m.
Pleuger Motoren: 350 m.

6.6 Kabelbefestigung

Kabelschellen müssen alle 3 m angebracht werden, um das Unterwasserkabel und das Stahlseil (falls vorhanden) am Steigrohr zu befestigen.

Der Grundfos Kabelschellensatz kann mit jeder Pumpe geliefert werden. Der Satz besteht aus einem 1,5 mm dicken Gummiband und 16 Knöpfen.

Montage: Gummiband so abschneiden, dass das Ende ohne Schlitz so lang wie möglich wird.
Einen Knopf in den ersten Schlitz setzen.
Stahlseil entlang des Unterwasserkabels legen, Abb. 21.

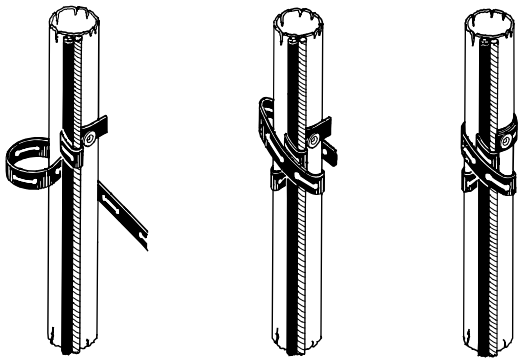

Abb. 21 Montage der Kabelschellen

Gummiband einmal um das Stahlseil und das Unterwasserkabel wickeln.
Danach das Band mindestens zweimal fest um das Steigrohr, das Stahlseil und das Kabel wickeln.
Den naheliegenden Schlitz über den Knopf drücken und das Band abschneiden.

Bei großen Kabelquerschnitten kann es notwendig sein, das Band mehrmals umzuwickeln.

Bei Verwendung von Kunststoffrohren muss dem Unterwasserkabel aufgrund der belastungsabhängigen Lagenveränderung eine gewisse Toleranz gelassen werden.

Wenn Flanschrohre verwendet werden, sollten Kabelschellen unter und über jeder Flanschverbindung angebracht werden.

6.7 Absenkung der Pumpe

Vor dem Einbau der Pumpe empfiehlt es sich, das Bohrloch mit einem Kaliber auf freien Durchgang zu prüfen.

Die Pumpe muss vorsichtig ins Bohrloch so abgesenkt werden, dass das Motorkabel und das Unterwasserkabel nicht beschädigt werden.

Achtung ***Die Pumpe darf nicht am Motorkabel gezogen werden.***

6.8 Einbautiefe

Bei voll abgesenktem Wasserspiegel muss das Wasser immer über dem Einlaufteil der Pumpe stehen, siehe Abschnitt *4.2 Einbauanforderungen* und Abb. 22.

Der minimale Zulaufdruck geht aus der NPSH-Kennlinie der Pumpe hervor.
Der Sicherheitszuschlag muss mindestens 1,0 mWS betragen.

Es empfiehlt sich, die Pumpe so einzubauen, dass genügend Wasser am Motor vorbeiströmt und diesen kühlt. Das bedeutet, dass das Motorteil oberhalb des Brunnenfilters eingebaut werden muss, siehe Abschnitt *4.4 Medientemperaturen/Motorkühlung*.

Wenn die Pumpe auf die gewünschte Tiefe abgesenkt ist, sollte diese mit Hilfe eines Brunnenkopfes gesichert werden.

Das Stahlseil so weit lockern, dass es eben unbelastet ist. Dann mit Hilfe von Seilklemmen am Brunnenkopf befestigen.

Hinweis ***Bei der Montage von Pumpen mit Kunststoffrohren muss die Ausdehnung der Rohre bei der Bestimmung der Einbautiefe berücksichtigt werden.***

7. Inbetriebnahme und Betrieb

7.1 Inbetriebnahme

- Wenn die Pumpe richtig angeschlossen und im Fördermedium eingetaucht ist, kann sie eingeschaltet werden. Das Druckventil auf ungefähr 1/3 der maximalen Leistung schließen.
- Eine Drehrichtungskontrolle wie im Abschnitt *5.7.1 Kontrolle der Drehrichtung* beschrieben vornehmen.
- Wenn das Wasser verunreinigt ist, wird das Ventil langsam weiter geöffnet.
- Die Pumpe solange laufen lassen, bis das Wasser klar ist.

Hinweis ***Eine zu frühe Abschaltung der Pumpe vergrößert die Gefahr einer Verstopfung der Pumpenteile oder des Rückschlagventils.***

- Beim Öffnen des Ventils muss die Wasserspiegelabsenkung geprüft werden, um sicherzustellen, dass die Pumpe stets eingetaucht bleibt.

Hinweis ***Der abgesenkte Wasserspiegel muss immer über dem Einlaufteil der Pumpe stehen, siehe Abschnitt 4.2 Einbauanforderungen und Abb. 22.***

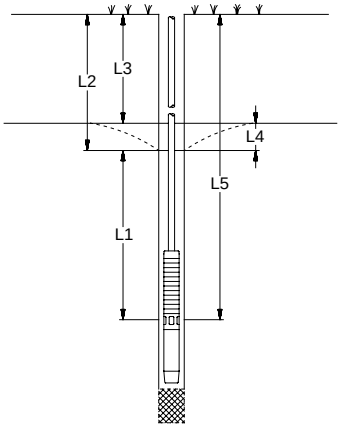

Abb. 22 Vergleich der verschiedenen Wasserspiegel

L1: Min. Einbautiefe unter dem abgesenkten Wasserspiegel. Min. 1 m empfohlen.

L2: Tiefe zum abgesenkten Wasserspiegel.

L3: Tiefe zum ruhenden Wasserspiegel.

L4: Absenkung. Höhenunterschied zwischen abgesenktem und ruhendem Wasserspiegel.

L5: Einbautiefe.

Falls die maximale Pumpenleistung größer ist als der Zulauf des Wassers zum Brunnen, empfiehlt es sich, den elektronischen Grundfos Motorvollschutz MP 204 oder einen anderen Trockenlaufschutz einzusetzen.

Ohne den Einsatz des Trockenlaufschutzes besteht die Gefahr, dass der Wasserspiegel bis unter das Einlaufteil der Pumpe abgesenkt wird und die Pumpe dadurch Luft ansaugt.

Achtung ***Längere Betriebszeit mit lufthaltigem Wasser kann eine Beschädigung der Pumpe und ungenügende Kühlung des Motors (Zerstörung) verursachen.***

7.2 Betrieb

7.2.1 Min. Förderstrom

Wegen der Kühlung des Motors darf die Leistung der Pumpe nie so niedrig eingestellt werden, dass die im Abschnitt *4.4 Medientemperaturen/Motorkühlung* erwähnten Anforderungen nicht erfüllt sind.

7.2.2 Häufigkeit des Ein-/Ausschaltens

Motortyp	Anzahl der Schaltungen
MS 402	Min. 1 mal/Jahr ist zu empfehlen. Max. 100 mal/Stunde. Max. 300 mal/Tag.
MS 4000	Min. 1 mal/Jahr ist zu empfehlen. Max. 100 mal/Stunde. Max. 300 mal/Tag.
MS 6000	Min. 1 mal/Jahr ist zu empfehlen. Max. 30 mal/Stunde. Max. 300 mal/Tag.
MMS 6000	Min. 1 mal/Jahr ist zu empfehlen. Max. 15 mal/Stunde. Max. 360 mal/Tag.
MMS 8000	Min. 1 mal/Jahr ist zu empfehlen. Max. 10 mal/Stunde. Max. 240 mal/Tag.
MMS 10000	Min. 1 mal/Jahr ist zu empfehlen. Max. 8 mal/Stunde. Max. 190 mal/Tag.
MMS 12000	Min. 1 mal/Jahr ist zu empfehlen. Max. 5 mal/Stunde. Max. 120 mal/Tag.
Franklin	Min. 1 mal/Jahr ist zu empfehlen. Max. 100 mal/Tag.
Mercury 6"	Min. 1 mal/Jahr ist zu empfehlen. Max. 20 mal/Stunde.
Mercury 8"	Min. 1 mal/Jahr ist zu empfehlen. Max. 15 mal/Stunde.
Mercury 10"	Min. 1 mal/Jahr ist zu empfehlen. Max. 10 mal/Stunde.
Mercury 12"	Min. 1 mal/Jahr ist zu empfehlen. Max. 6 mal/Stunde.
Pleuger	Min. 1 mal/Jahr ist zu empfehlen. Max. 100 mal/Tag.

D

8. Wartung und Service

Die Pumpen sind wartungsfrei.
Jedoch sichern regelmäßige Inspektionen eine lange Lebensdauer und einen störungsfreien Betrieb.

Alle Pumpen sind sehr servicefreundlich aufgebaut.

Servicesätze und Servicewerkzeuge sind von Grundfos lieferbar. Die Pumpen können in einer Grundfos Servicewerkstatt überprüft werden.

D

Wurde die Pumpe für die Förderung einer gesundheitsschädlichen oder giftigen Flüssigkeit eingesetzt, wird die Pumpe als kontaminiert klassifiziert.

Bei eventueller Serviceanforderung bei Grundfos muss unbedingt *vor* dem Versand der Pumpe mit Grundfos Kontakt aufgenommen werden. Informationen über Fördermedium usw. müssen vorliegen, da sonst Grundfos die Annahme der Pumpe verweigern kann.

Eventuelle Versandkosten gehen zu Lasten des Absenders.

9. Störungsübersicht

Störung	Ursache	Abhilfe
1. Pumpe läuft nicht.	a) Sicherungen durchgebrannt.	Durchgebrannte Sicherungen auswechseln. Wenn diese wieder durchbrennen, muss die elektrische Installation und das Kabel überprüft werden.
	b) Der Fehlerstrom-Schutzschalter oder Fehlerspannungs-Schutzschalter hat ausgelöst.	Schutzschalter wieder einschalten.
	c) Keine Stromzufuhr.	Mit dem Stromversorgungsunternehmen Verbindung aufnehmen.
	d) Der Überstromauslöser des Motorschutzschalters hat ausgelöst.	Überstromauslöser wieder einschalten (erfolgt automatisch oder muss von Hand gemacht werden). Wenn er wieder auslöst, Spannung prüfen. Ist die Spannung in Ordnung, siehe 1 e) - h).
	e) Der Motorschutzschalter/Schütz ist schadhaft.	Motorschutzschalter/Schütz auswechseln.
	f) Die Startvorrichtung ist schadhaft.	Startvorrichtung reparieren/auswechseln.
	g) Der Steuerstromkreislauf ist ausgefallen oder schadhaft.	Die elektrische Installation prüfen.
	h) Die Pumpe wurde durch Trockenlaufschutz abgeschaltet.	Wasserstand prüfen. Ist der Wasserstand in Ordnung, Trockenlaufschutz prüfen.
	i) Pumpe/Unterwasserkabel ist schadhaft.	Pumpe/Kabel reparieren/auswechseln.
2. Pumpe läuft, fördert aber kein Wasser.	a) Das Absperrventil ist geschlossen.	Ventil öffnen.
	b) Kein Wasser oder zu niedriger Wasserstand im Brunnen.	Siehe 3 a).
	c) Das Rückschlagventil ist in geschlossener Stellung blockiert.	Pumpe ziehen und Ventil reinigen oder auswechseln.
	d) Das Sieb ist verstopft.	Pumpe ziehen und Sieb im Einlaufteil reinigen.
	e) Die Pumpe ist schadhaft.	Pumpe reinigen/auswechseln.
3. Pumpe läuft mit verringerter Leistung.	a) Die Absenkung ist größer als vorausgesehen.	Einbautiefe vergrößern, Pumpe drosseln oder durch ein kleineres Modell ersetzen, um eine kleinere Leistung zu erzielen.
	b) Falsche Drehrichtung.	Siehe Abschnitt *5.7.1 Kontrolle der Drehrichtung*.
	c) Die Ventile in der Druckleitung sind teilweise geschlossen/blockiert.	Ventile überholen und evtl. reinigen/auswechseln.
	d) Die Druckleitung ist durch Verunreinigungen teilweise zugesetzt (verockert).	Druckleitung reinigen/auswechseln.
	e) Das Rückschlagventil der Pumpe ist teilweise blockiert.	Pumpe ziehen und Ventil reinigen/auswechseln.
	f) Pumpe und Steigrohr sind durch Verunreinigungen teilweise zugesetzt (verockert).	Pumpe ziehen, demontieren, reinigen oder evtl. auswechseln. Rohr reinigen.
	g) Die Pumpe ist schadhaft.	Pumpe reparieren/auswechseln.
	h) Undichtigkeit in der Rohrleitung.	Rohrleitung prüfen und reparieren.
	i) Das Steigrohr ist schadhaft.	Steigrohr auswechseln.
4. Häufiges Ein- und Ausschalten.	a) Die Differenz des Druckschalters zwischen Ein- und Ausschaltdruck ist zu klein.	Differenz vergrößern. Jedoch darf der Ausschaltdruck den Betriebsdruck des Druckbehälters nicht übersteigen, und der Einschaltdruck muss hoch genug sein, um eine ausreichende Wasserversorgung zu gewährleisten.
	b) Die Elektroden der Wasserstandssteuerung oder die Wasserstandsschalter im Behälter sind nicht richtig montiert.	Die Intervalle der Elektroden/Wasserstandsschalter einstellen, so dass zwischen Ein- und Ausschalten der Pumpe eine angemessene Zeit liegt. Montage- und Betriebsanleitungen der verwendeten automatischen Einrichtungen beachten. Wenn die Intervalle zwischen Ein- und Ausschalten nicht mit den automatischen Einrichtungen eingestellt werden können, Pumpenleistung reduzieren durch Drosselung des Druckventils.
	c) Das Rückschlagventil ist undicht oder ist in teilweise offener Stellung blockiert.	Pumpe ziehen und Rückschlagventil reinigen/auswechseln.
	d) Das Luftvolumen im Druckbehälter/Membranbehälter ist zu klein.	Luftvolumen in Übereinstimmung mit der Montage- und Betriebsanleitung einpumpen.
	e) Der Druckbehälter/Membranbehälter ist zu klein.	Der Rauminhalt des Druckbehälters/Membranbehälters sollte vergrößert werden durch Auswechselung oder Hinzufügung eines zusätzlichen Behälters.
	f) Die Membrane im Membranbehälter ist schadhaft.	Membranbehälter prüfen.

D

10. Motor- und Kabelkontrolle

1. Netzspannung 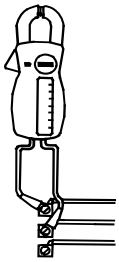 TM00 1371 5092	Bei Drehstrommotoren mit Hilfe eines Voltmeters die Spannung zwischen den Phasen messen. Bei Einphasenmotoren zwischen Phase und Nulleiter oder zwischen zwei Phasen messen, abhängig vom Netztyp. Voltmeter mit den Klemmen im Motorschutzschalter verbinden.	Die anliegende Spannung während des Betriebes darf nicht von dem im Abschnitt *5.1 Allgemeines* angegebenen Spannungsbereich abweichen. Größere Abweichungen können Beschädigung des Motors verursachen. Große Spannungsschwankungen deuten auf eine schlechte Stromversorgung hin, und die Pumpe muss abgeschaltet werden, bis der Fehler behoben worden ist.
2. Stromaufnahme 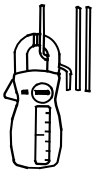 TM00 1372 5092	Stromstärke [Ampere] jeder Phase messen, während die Pumpe gegen einen konstanten Förderdruck läuft (wenn möglich, bei der Leistung, bei der der Motor am meisten belastet ist). Für maximalen Betriebsstrom, siehe Leistungsschild.	Bei Drehstrommotoren sollte die Stromaufnahme der einzelnen Phasen annähernd gleich sein, max. zulässige Differenz zwischen größtem und kleinstem Strom 5%. Bei größerer Differenz oder wenn der maximale Betriebsstrom überschritten wird, sind folgende Fehler möglich: • Die Kontakte des Motorschutzschalters sind verbrannt. Kontakte erneuern oder bei Einphasen-Betrieb den Schaltkasten auswechseln. • Schlechte Verbindung in den Drähten, möglicherweise im Kabelverbinder. Siehe Punkt 3. • Zu hohe oder zu niedrige Netzspannung. Siehe Punkt 1. • Die Motorwicklungen sind kurzgeschlossen oder teilweise unterbrochen. Siehe Punkt 3. • Beschädigte Pumpen können Motorüberlastungen verursachen. Pumpe zwecks Reparatur ziehen. • Die Differenz zwischen den Widerstandswerten der Motorwicklungen (3 Phasen) ist zu groß. Phasen in Phasenfolge für gleichartigere Belastung wechseln. Hilft das nicht, siehe Punkt 3.
Punkt 3 und 4: Messung ist nicht erforderlich, wenn Netzspannung und Stromaufnahme normal sind.		
3. Wicklungswiderstand 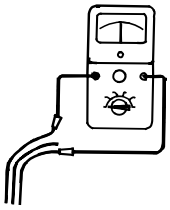 TM00 1373 5092	Unterwasserkabel vom Netz entfernen. Wicklungswiderstand zwischen den Leitern des Unterwasserkabels messen.	Bei Drehstrommotoren darf der höchste Wert den niedrigsten max. um 10% übersteigen. Wenn die Abweichung größer ist, muss die Pumpe gezogen werden. Motor, Motorkabel und Unterwasserkabel getrennt messen und defekte Teile reparieren/auswechseln. **Hinweis:** Bei Einphasenmotoren der dreiadrigen Ausführung wird die Betriebswicklung den niedrigsten Wert haben.
4. Isolierwert 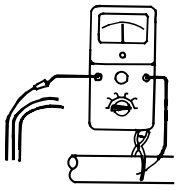 TM00 1374 5092	Unterwasserkabel vom Netz entfernen. Isolierwert jeder Phase gegen Erde (Masse) messen. Die Erdverbindung muss sorgfältig hergestellt werden.	Wenn der gemessene Isolierwert niedriger als 0,5 MΩ ist, muss die Pumpe gezogen und der Motor oder das Kabel repariert werden. Andere Isolierwerte können durch örtliche Bestimmungen festgelegt sein.

11. Entsorgung

Dieses Produkt sowie Teile davon müssen umweltgerecht entsorgt werden:

1. Benutzen Sie die öffentlichen oder privaten Entsorgungsgesellschaften.
2. Ist das nicht möglich, wenden Sie sich bitte an die nächste Grundfos Gesellschaft oder Werkstatt.

SOMMAIRE

Avant d'entamer les opérations d'installation, étudier avec attention la présente notice d'installation et d'entretien. L'installation et le fonctionnement doivent être conformes aux réglementations locales et faire l'objet d'une bonne utilisation.

Cette notice s'applique aux moteurs immergés, types Grundfos MS et MMS, et aux pompes immergées Grundfos, type SP, équipées de moteurs immergés Grundfos MS ou MMS, Franklin 4"-8", Mercury 6"-12" et Pleuger 6"-12".

Si la pompe est équipée d'un autre moteur que Grundfos MS ou MMS, il faut remarquer que les données du moteur peuvent être différentes des données indiquées dans cette notice.

1. Livraison et stockage

1.1 Livraison

Les pompes immergées Grundfos sont fournies par l'usine dans un emballage propre dans lequel elles doivent rester jusqu'à leur installation.

Pendant le déballage et avant l'installation, faire grande attention lors de la manutention de la pompe pour éviter de la tordre; ceci pourrait causer un désalignement de celle-ci.

Nota : Les pompes devront restées dans leur emballage tant qu'elles ne sont pas installées en position verticale.
Lorsque la partie hydraulique de la pompe et le moteur sont fournies séparément (pompes hautes), monter le moteur sur l'hydraulique comme indiqué dans le paragraphe *5.1 Montage du moteur sur l'hydraulique*.

Nota : La plaque des données fournie avec la pompe doit être placée près du lieu d'installation.

La pompe doit être protégée contre les chocs inutiles.

1.2 Stockage et manutention

Température de stockage

Pompe : –20°C à +60°C.
Moteur : –20°C à +70°C.

Les moteurs doivent être stockés dans un lieu fermé, sec et correctement ventilé.

Nota : Si les moteurs MMS sont stockés pendant plus d'un an, l'arbre doit être tourné manuellement au moins une fois par mois. Si le moteur a été stocké pendant plus d'un an avant son installation, les pièces rotatives du moteur doivent être démontées et contrôlées avant utilisation.

La pompe ne doit pas être exposée à la lumière.

Si la pompe a été déballée, celle-ci doit être stockée horizontalement, bien supportée, ou verticalement pour éviter son désalignement. S'assurer que la pompe ne roule pas ou ne tombe pas. Pendant le stockage, la pompe peut être supportée comme indiqué fig. 1.

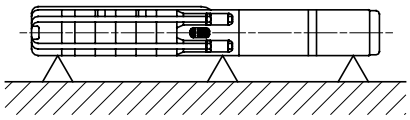

Fig. 1 Position de la pompe pendant son stockage

1.2.1 Protection anti-gel

Si la pompe doit être stockée après utilisation, elle doit être dans un lieu protégé contre le gel, ou alors il faut s'assurer que le liquide moteur soit anti-gel.

2. Caractéristiques générales

2.1 Applications

Les pompes immergées Grundfos, type SP, sont conçues pour un large domaine d'adduction d'eau et pour des applications de transfert de liquide, comme l'adduction d'eau pour les maisons, les jardins ou les fermes, pour le pompage de l'eau souterraine et la surpression, pour de multiples applications industrielles.

La pompe doit être installée de manière à ce que la crépine d'aspiration soit complètement immergée sous le niveau d'eau. La pompe peut être installée horizontalement ou verticalement, voir paragraphe *3.2 Positionnement*.

2.2 Liquides pompés

Liquides propres, clairs, **non explosifs** sans particules solides ou fibreuses.

La concentration maxi de sable dans l'eau ne doit pas dépasser 50 g/m^3. Une plus grande concentration de sable réduira la vie de la pompe et augmentera le risque de blocage.

Nota : Lors du pompage de liquides ayant une densité supérieure à celle de l'eau, des moteurs de puissances supérieures doivent être utilisés.

Si des liquides de viscosité supérieure à celle de l'eau doivent être pompés, prière de contacter Grundfos.

Les versions spéciales SP A N, SP A R, SP N, SP R et SPE sont conçues pour pomper des liquides plus agressifs que l'eau potable.

La température maxi du liquide pompé est indiquée dans le paragraphe *3.4 Températures du liquide/refroidissement*.

F

2.3 Niveau de pression acoustique

Le niveau de pression acoustique a été mesuré en fonction des règles définies par la Directive du Conseil 98/37/EC relatives aux machines.

Niveau de pression acoustique des pompes

S'applique aux pompes immergées dans l'eau, sans vanne de régulation externe.

Type de pompe	$\overline{L}_{pA}$ [dB(A)]
SP 1A	<70
SP 2A	<70
SP 3A	<70
SP 5A	<70
SP 8A	<70
SP 14A	<70
SP 17	<70
SP 30	<70
SP 46	<70
SP 60	<70
SP 77	<70
SP 95	<70
SP 125	79
SP 160	79
SP 215	82

Niveau de pression acoustique des moteurs

Le niveau de pression acoustique des moteurs Grundfos MS et MMS est inférieur à 70 dB(A).

Autres marques de moteurs : Se reporter à la notice d'installation et d'entretien de ces moteurs.

3. Préparation

Avant de commencer n'importe quel travail sur la pompe, s'assurer que l'alimentation électrique ait été coupée et qu'elle ne puisse pas être branchée accidentellement.

3.1 Contrôle du liquide moteur

Les moteurs immergés sont initialement remplis avec un liquide spécial non toxique, qui les protège du gel jusqu'à –20°C.

Nota : Le niveau du liquide dans le moteur doit être contrôlé et le moteur doit être rempli de nouveau si nécessaire.

Nota : S'il existe un risque de gel, un liquide spécial Grundfos doit être utilisé pour remplir le moteur. Autrement, de l'eau claire peut être utilisée (**ne jamais** utiliser de l'eau distillée).

Le remplissage de liquide est réalisé comme indiqué ci-dessous.

3.1.1 Moteurs immergés Grundfos MS 4000 et MS 402

L'orifice de remplissage est situé :

MS 4000 : dans la partie supérieure du moteur.

MS 402 : sur la plaque inférieure du moteur.

1. Positionner la pompe comme indiqué fig. 2. La vis de remplissage doit être située au point le plus haut du moteur.
2. Déposer la vis de l'orifice de remplissage.
3. Injecter le liquide dans le moteur à l'aide de la seringue de remplissage fig. 2 jusqu'à ce que le liquide déborde légèrement de l'orifice de remplissage.
4. Remettre la vis dans l'orifice de remplissage et bloquer avant de changer la position de la pompe.

Couples de serrage :

MS 4000 : 3,0 Nm.

MS 402 : 2,0 Nm.

La pompe immergée est maintenant prête à être installée.

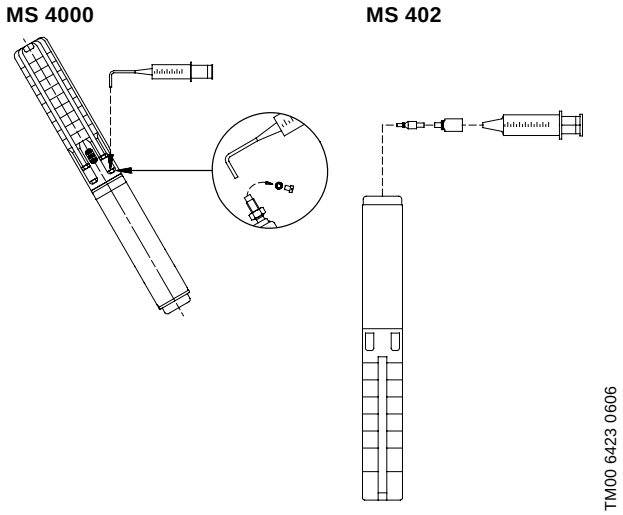

Fig. 2 Position de la pompe pendant le remplissage – MS 4000 et MS 402

3.1.2 Moteurs immergés Grundfos MS 6000

- Si le moteur est remplacé, il faut vérifier le niveau du liquide avant de monter le moteur sur la pompe, voir fig. 3.
- Si les pompes proviennent directement de Grundfos, le niveau du liquide a déjà été contrôlé.
- En cas de réparation, le niveau du liquide doit être contrôlé, voir fig. 3.

Procédure de remplissage :

L'orifice de remplissage est situé en haut du moteur.

1. Positionner la pompe comme indiqué fig. 3. La vis de remplissage doit être située au point le plus haut du moteur.
2. Déposer la vis de l'orifice de remplissage.
3. Injecter le liquide dans le moteur à l'aide de la seringue de remplissage fig. 3 jusqu'à ce que le liquide déborde légèrement de l'orifice de remplissage.
4. Remettre la vis dans l'orifice de remplissage et bloquer avant de changer la position de la pompe.

Couple de serrage : 3,0 Nm.

La pompe immergée est maintenant prête à être installée.

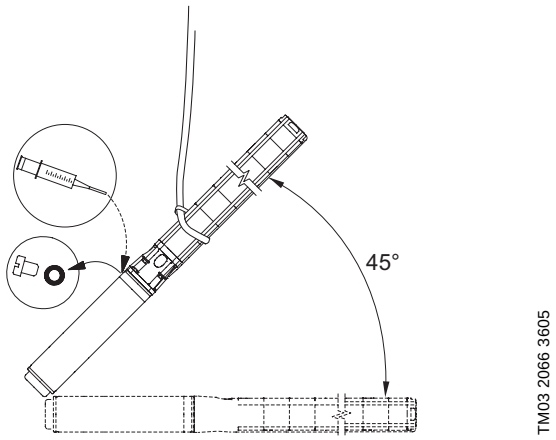

Fig. 3 Position de la pompe pendant le remplissage – MS 6000

3.1.3 Moteurs immergés Grundfos MMS 6000, MMS 8000, MMS 10000 et MMS 12000

Procédure de remplissage :

1. Placer le moteur à 45° avec partie supérieure dirigée vers le haut, voir fig. 4.
2. Dévisser le bouchon A et mettre un entonnoir dans l'orifice.
3. Verser l'eau du robinet dans le moteur jusqu'à ce le liquide jaillisse de A.
   Nota : Ne pas utiliser le liquide moteur comme il contient de l'huile.
4. Enlever l'entonnoir et remettre le bouchon A.

Nota : Avant de monter le moteur sur l'hydraulique après une longue période de stockage, lubrifier la garniture mécanique en ajoutant quelques gouttes d'eau et en faisant tourner l'arbre.

La pompe immergée est maintenant prête à être installée.

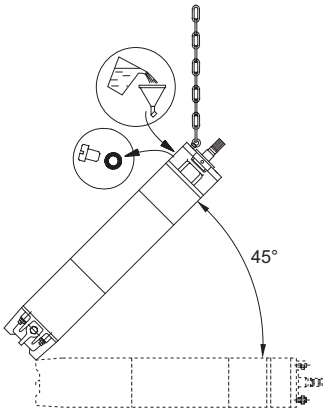

TM03 2065 3605

Fig. 4 Position du moteur pendant le remplissage – MMS

3.1.4 Moteurs immergés Franklin à partir de 3 kW

Le niveau du liquide moteur dans les moteurs immergés Franklin 4" et 6" est contrôlé en mesurant la distance à partir de la plaque inférieure de la pompe jusqu'à la membrane en caoutchouc. La distance peut être mesurée en insérant une règle ou une petite baguette à travers l'orifice jusqu'à atteindre la membrane, fig. 5.
Nota : Faire attention à ne pas endommager la membrane.

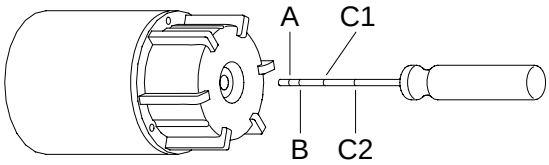

TM00 1353 5092

Fig. 5 Mesurer la distance de la plaque inférieure à la membrane

Le tableau ci-dessous indique la distance entre la plaque inférieure de la pompe et la membrane :

Moteur	Dimension	Distance
Franklin 4", 0,25 à 3 kW (voir fig. 7a)	A	8 mm
Franklin 4", 3 à 7,5 kW (voir fig. 7b)	B	16 mm
Franklin 6", 4 à 45 kW (voir fig. 7c)	C1	35 mm
Franklin 6", 4 à 22 kW (voir fig. 7d)	C2	59 mm

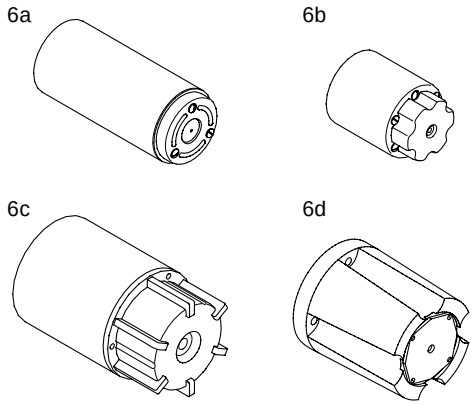

TM00 6422 3695

Fig. 6 Moteurs immergés Franklin

Si la distance est incorrecte, procéder à un ajustage comme indiqué paragraphe *3.1.5 Moteurs immergés Franklin*.

3.1.5 Moteurs immergés Franklin

Le niveau du liquide moteur dans les moteurs immergés Franklin 8" est contrôlé comme suit :

1. Soulever le filtre devant la soupape en haut du moteur en utilisant un tournevis. Si le filtre est rainuré, dévisser. La position de la vis de remplissage est indiqué fig. 7.
2. Presser la seringue de remplissage contre la soupape et injecter le liquide, fig. 7. Si le cône de soupape est abaissé trop rapidement, celui-ci peut être endommagé et la soupape fuira.
3. Eliminer l'air dans le moteur en pressant légèrement le bout de la seringue contre la soupape.
4. Répéter le procédé en injectant du liquide et en chassant l'air jusqu'à ce que liquide apparaisse ou que la membrane revienne en position correcte (Franklin 4" et 6").
5. Remettre le filtre après le nouveau remplissage du liquide.

La pompe immergée est maintenant prête à être installée.

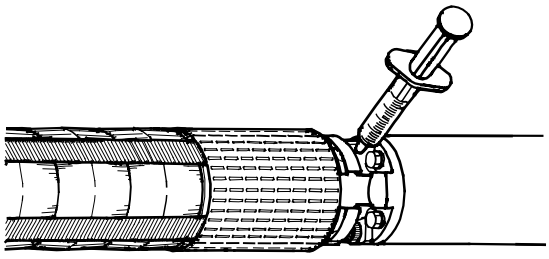

TM00 1354 5092

Fig. 7 Position de la vis de remplissage

3.1.6 Moteurs immergés Mercury

Le niveau de liquide moteur est contrôlé comme pour les moteurs Franklin 8", voir paragraphe *3.1.5 Moteurs immergés Franklin*.

3.1.7 Moteurs immergés Pleuger

Le niveau de liquide moteur est contrôlé comme pour les moteurs Franklin 8", voir paragraphe *3.1.5 Moteurs immergés Franklin*.

3.2 Positionnement

Si la pompe est installée dans une position accessible, l'accouplement doit absolument être hors de portée pendant son fonctionnement. La pompe peut, par exemple, être montée dans une chemise.

En fonction du type de moteur, la pompe peut être installée verticalement ou horizontalement. Une liste complète des types de moteur conçus pour une installation horizontale est indiquée dans le paragraphe *3.2.1*.

Si la pompe est installée horizontalement, l'orifice de refoulement **ne doit jamais** être situé en dessous du plan horizontal, voir fig. 8.

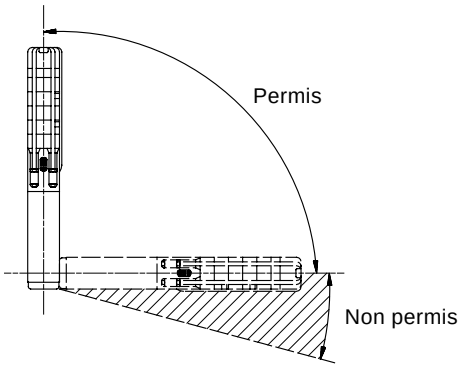

TM00 1355 5092

Fig. 8 Positionnement

Si la pompe est installée horizontalement (dans un réservoir par exemple), il est recommandé de la monter dans une chemise.

F

3.2.1 Moteurs conçus pour une installation horizontale

Type de moteur	Puissance du moteur 50 Hz	Puissance du moteur 60 Hz
	[kW]	[kW]
MS	Toutes les grandeurs	Toutes les grandeurs
MMS 6000	3,7 à 18,5	3,7 à 18,5
MMS 8000	22,0 à 63,0	22,0 à 63,0
MMS 10000	75,0 à 110,0	75,0 à 110,0
MMS 12000	147,0 à 190,0	–

Lorsque les moteurs immergés Franklin 4" jusqu'à 2,2 kW inclus sont démarrés plus de 10 fois par jour, il est recommandé d'inclilier le moteur d'au moins 15° au dessus du plan horizontal afin de minimiser l'effort du disque supérieur.

Nota : Pendant le fonctionnement, la crépine d'aspiration de la pompe doit absolument toujours être immergée dans le liquide.

Si la pompe est utilisée pour le pompage de liquides relativement chauds (40°C à 60°C), faire très attention à ce que personne ne touche la pompe, en installant une protection par exemple.

3.3 Diamètre de la pompe/du moteur

Le diamètre maxi de la pompe/du moteur est indiqué dans les tableaux pages 146 et 147.

Il est recommandé de contrôler l'intérieur du forage avec une sonde pour s'assurer que celui-ci n'est pas obstrué.

3.4 Températures du liquide/refroidissement

La température maxi du liquide et le flux mini du liquide autour du moteur sont indiqués sur le tableau ci-dessous.

Il est recommandé d'installer le moteur en dessus de la crépine du forage afin d'assurer un bon refroidissement de celui-ci.

Nota : Au cas où un flux suffisant ne peut pas être créé, une chemise doit être installée.

S'il y a un risque de formation de sédiments, comme du sable, autour du moteur, une chemise doit être installée afin d'assurer un bon refroidissement du moteur.

3.4.1 Température maxi du liquide

En tenant compte des pièces en caoutchouc du moteur et de la pompe, la température du liquide ne doit pas dépasser 40°C (~105°F). Voir le tableau suivant.

La pompe peut fonctionner pour des températures du liquide entre 40°C et 60°C (~105°F et 140°F); mais les pièces en caoutchouc doivent être remplacées tous les 3 ans.

Moteur	Installation		
	Flux le long du moteur	Vertical	Horizontal
Grundfos MS et MMS	**Convection libre 0 m/s**	20°C (~68°F)	Chemise recommandée
Grundfos MS	**0,15 m/s**	40°C (~105°F)	40°C (~105°F)
Grundfos MS I *	**0,15 m/s**	60°C (~140°F) Chemise recommandée	60°C (~140°F) Chemise recommandée
Grundfos MMS	**0,15 m/s**	25°C (~77°F)	25°C (~77°F)
Franklin 4"	**0,08 m/s**	30°C (~85°F)	30°C (~85°F)
Franklin 6" et 8"	**0,16 m/s**	30°C (~85°F)	30°C (~85°F)
Mercury	**0,15 m/s**	25°C (~77°F)	25°C (~77°F)
Pleuger	**0,5 m/s**	30°C (~86°F)	30°C (~86°F)

* A pression ambiante de 1 bar minimum (1 MPa)

Nota : Par convection libre, on suppose que le diamètre du forage dépasse celui du moteur immergé de 2" au minimum.

Autres marques de moteurs : Voir spécifications du moteur.

3.5 Raccordement à la tuyauterie

Si le bruit de la pompe peut être transmis au bâtiment par les tuyaux, utiliser de préférence des tuyaux en plastique.

Nota : Les tuyaux en plastique sont seulement recommandés pour les pompes 4".

Lorsque des tuyaux plastiques sont utilisés, la pompe doit être maintenue par une élingue.

S'assurer que les tuyaux plastiques utilisés soient conçus pour la température du liquide pompé et pour la pression de la pompe.

Lors du raccordement de tuyaux plastiques, un raccord à compression doit être placé entre la pompe et le tuyau.

4. Branchement électrique

Avant de commencer n'importe quel travail sur la pompe, s'assurer que l'alimentation électrique ait été coupée et qu'elle ne puisse pas être branchée accidentellement.

4.1 Généralités

Le branchement électrique doit être effectué par un électricien agréé conformément aux prescriptions locales.

La tension d'alimentation, l'intensité nominale et le cos φ sont indiqués sur la plaque de données qui **doit** être placée près du lieu d'installation.

La tension requise pour les moteurs immergés Grundfos **MS** et **MMS**, mesurée aux bornes du moteur, est de –10%/+6% de la tension nominale pendant un fonctionnement continu (en tenant compte des variations de la tension d'alimentation et des pertes dans les câbles).

En plus, il faut contrôler la symétrie dans les lignes d'alimentation; par exemple il doit y avoir la même différence de tension entre chaque phase, voir paragraphe *9. Contrôle du moteur et du câble*, point 2.

La pompe doit être reliée à la terre.

La pompe doit être connectée à un interrupteur principal externe avec un intervalle isolant de 3 mm mini entre chaque pôle.

Si les moteurs Grundfos MS équipés d'un capteur de température intégré (Tempcon) ne sont pas installés avec un MP 204 ou une autre protection Grundfos similaire, ils doivent être connectés à un condensateur 0,47 µF approuvé pour un fonctionnement phase-phase (IEC 384-14) pour respecter la Directive EC EMC (89/336/EEC). Le condensateur doit être connecté aux deux phases auxquelles le capteur de température est connectée, voir fig. 9.

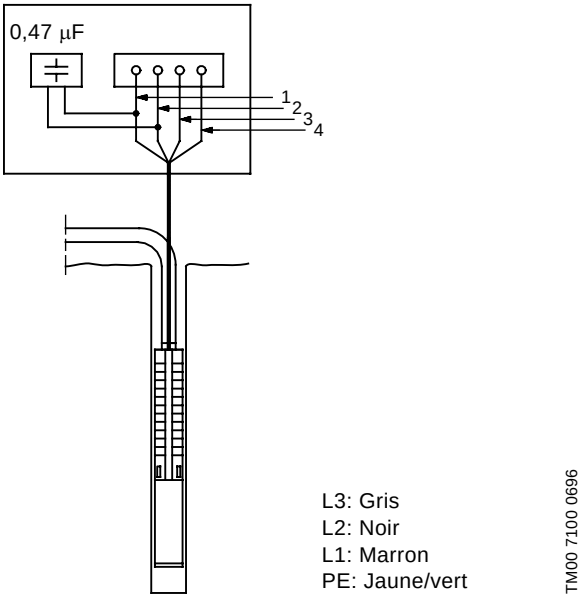

Fig. 9 Connexion du condensateur

Les moteurs sont bobinés pour un démarrage direct ou pour un démarrage étoile-triangle et l'intensité de démarrage atteint 4 à 6 fois l'intensité à pleine charge du moteur.

Le temps d'accélération de la pompe est seulement d'environ 0,1 secondes. Le démarrage direct est par conséquent normalement approuvé par EDF.

4.1.1 Utilisation avec un convertisseur de fréquences

Moteurs Grundfos

Les moteurs triphasés Grundfos peuvent être raccordés à un convertisseur de fréquences.

Nota : Si un moteur Grundfos MS équipé d'un capteur de température est connecté à un convertisseur de fréquences, un fusible incorporé dans le capteur fondera et le capteur ne sera pas actif. Le capteur ne peut pas être réactivé. Ceci signifie que le moteur fonctionnera comme un moteur sans capteur de température.

Si un capteur de température est nécessaire, un capteur Pt100 pour montage sur moteur immergé peut être délivré par Grundfos.

Pendant le fonctionnement du convertisseur de fréquences, il est recommandé de faire tourner le moteur à une fréquence supérieure à la fréquence nominale (50 ou 60 Hz). En relation avec le fonctionnement de la pompe, il est important de ne jamais réduire la fréquence (et en conséquence la vitesse) à tel point que le flux nécessaire du liquide pour le refroidissement du moteur ne serait plus assuré.

Pour éviter des dommages de la partie hydraulique de la pompe, il faut absolument s'assurer que le moteur s'arrête lorsque le débit de la pompe est en dessous de 0,1 x le débit nominal.

Certains modèles de convertisseur de fréquences peuvent entraîner des crêtes de tension nuisibles pour le moteur.

Les moteurs, type MS 402, alimentés jusqu'en 440 V inclus (voir plaque signalétique du moteur) doivent être protégés, en amont, contre les crêtes de tension supérieures à 650 V (valeur maximale).

Il est recommandé de protéger les autres moteurs contre les crêtes de tension supérieures à 850 V.

La perturbation, mentionnée ci-dessus, peut être éliminée en plaçant un **filtre RC** entre le convertisseur de fréquences et le moteur.

Les possibles bruits causés par le moteur peuvent être éliminés en installant un **filtre LC** qui éliminera les crêtes de tension provenant du convertisseur de fréquences.

Pour plus d'informations, prière de contacter Grundfos.

Autres marques de moteurs que Grundfos

Prière de contacter Grundfos qui transmettra au fabricant.

4.2 Protection moteur

4.2.1 Moteurs monophasés

Les moteurs monophasés, type MS 402, sont équipés d'une protection thermique incorporée par Klixon et ne requièrent aucune protection supplémentaire.

Lorsque le moteur déclenche pour cause de surchauffe, les bornes du moteur sont toujours sous tension.
Lorsque le moteur a suffisamment refroidi, il redémmarera automatiquement.

Les moteurs immergés monophasés, type MS 4000, doivent être protégés. Le dispositif de protection peut être incorporé dans le coffret de démarrage ou séparément.

Les moteurs Franklin 4" PSC doivent être raccordés à un disjoncteur.

4.2.2 Moteurs triphasés

Les moteurs Grundfos **MS** sont disponibles avec ou sans un capteur de température intégré.

Les moteurs **avec** un capteur de température intégré (capable de fonctionner) doivent être protégés par :

- un disjoncteur avec relais thermique ou
- un MPT 75 et un disjoncteur avec relais thermique ou
- un MP 204 et contacteur(s).

Les moteurs **sans** capteur de température ou avec un capteur de température intégré (**non** capable de fonctionner) doivent être protégés par :

- un disjoncteur avec relais thermique ou
- un MP 204 et contacteur(s).

Les moteurs Grundfos **MMS** n'intègrent pas un capteur de température. Un capteur Pt100 est disponible en accessoire.

Les moteurs **avec** le capteur Pt100 doivent être protégés par :

- un disjoncteur avec relais thermique ou
- un MP 204 et contacteur(s).

Les moteurs **sans** le capteur Pt100 doivent être protégés par :

- un disjoncteur avec relais thermique ou
- un MP 204 et contacteur(s).

4.2.3 Réglages du disjoncteur

Pour des moteurs froids, le temps de déclenchement du moteur doit être inférieur à 10 secondes pour une intensité atteignant 5 fois l'intensité nominale du moteur.

Nota : Si cette condition n'est pas respectée, la garantie du moteur ne sera pas valide.

Afin d'assurer une protection optimale du moteur immergé, le disjoncteur doit être réglé selon les indications suivantes :

1. Régler le relais thermique à l'intensité nominale du moteur.
2. Démarrer la pompe et la laisser tourner pendant une demi-heure à sa valeur nominale.
3. Diminuer lentement la valeur affichée jusqu'au moment de déclenchement.
4. Remonter ensuite le réglage du relais thermique de 5%.

Le réglage autorisé le plus élevé est l'intensité nominale du moteur.

Pour les moteurs bobinés pour un démarrage étoile-triangle, l'unité de protection du moteur doit être réglé comme indiqué ci-dessus, mais le réglage maxi doit être effectué ainsi :

Réglage de la protection thermique = intensité nominale x 0,58.

Le temps de démarrage le plus long autorisé pour un démarrage étoile-triangle ou par auto-transformateur est de 2 secondes.

4.3 Protection contre la foudre

L'installation peut être équipée d'un dispositif de protection contre les surtensions pour protéger le moteur contre les surcharges dans les lignes d'alimentation électrique dues à la foudre, voir fig. 10.

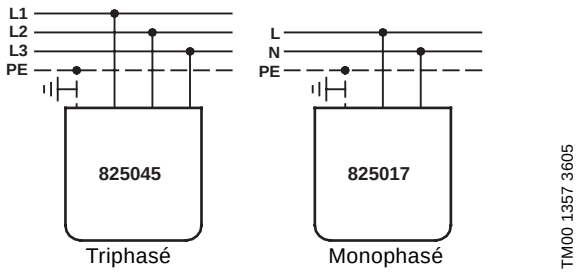

Fig. 10 Montage d'un dispositif de protection contre les surtensions

F

Le dispositif de protection contre les surtensions ne protège pas, cependant, contre un coup de foudre direct.

L'appareil de protection contre les surtensions doit être raccordé à l'installation aussi près que possible du moteur et toujours en accord avec les règlementations locales.
Renseignez-vous auprès de Grundfos pour les appareils de protection contre la foudre.

Les moteurs immergés, type MS 402, ne nécessitent pas cependant de protection supplémentaire car ils sont très isolés.

Veuillez demander un Kit "raccord de câble" avec dispositif de protection contre les surtensions pour les moteurs immergés 4" Grundfos (Réf. 799911 / 799912).

4.4 Dimension des câbles

S'assurer que les câbles immergés utilisés résistent à l'immersion dans le liquide pompé et à la température de celui-ci.

Grundfos peut fournir des câbles immergés pour un large domaine d'applications.

La section (q) du câble doit être calculée en fonction de :

1. Le câble immergé doit être calculé en fonction de l'intensité nominale (I) du moteur.
2. La section doit être suffisante pour permettre une chute de tension acceptable dans le câble.

Utiliser la section la plus large dans les points 1. et 2.

Re 1 : Le tableau ci-dessous indique les valeurs d'intensité maxi tolérées dans les câbles immergés Grundfos en fonction de leurs sections à une température ambiante maxi de 30°C.
Prière de contacter Grundfos si la température ambiante dépasse 30°C.

Lors de la détermination des sections de câble immergé, s'assurer que l'intensité nominale ne dépasse pas la valeur (I_S) indiquée.

Pour un démarrage étoile-triangle, cependant, dimensionner les câbles de manière à ce que 0,58 x l'intensité nominale ne dépasse pas la valeur I_S des câbles indiquée dans le tableau ci-dessous.

q [mm^2]	I_S [A]	q [mm^2]	I_S [A]
1,5	18,5	50	153
2,5	25	70	196
4	34	95	238
6	43	120	276
10	60	150	319
16	80	185	364
25	101	240	430
35	126	300	497

Si les câbles immergés Grundfos ne sont pas utilisés, la section de câbles doit être calculée en fonction des valeurs d'intensité admissibles dans les câbles déjà existants.

Re 2 :
Nota : La section des câbles immergés doit être assez grande pour permettre d'avoir une tension convenable comme indiqué dans le paragraphe *4.1 Généralités*.

Déterminer la chute de tension selon la section des câbles immergés par l'intermédiaire des abaques pages 148 et 149, où :

I = Intensité nominale du moteur.
Pour un démarrage étoile-triangle
I = intensité nominale du moteur x 0,58.

Lx = Longueur du câble pour une tension chutant de 1% par rapport à la tension nominale.

$$Lx = \frac{\text{longueur du câble}}{\text{chute de tension admissible en \%}}$$

q = Section du câble immergé.

Tracer une droite entre la valeur I sur l'échelle des intensités et la valeur Lx sur l'échelle des longueurs de câble. A l'intersection de la droite et de l'axe q des sections de câble, sélectionner la section située juste au dessus de l'intersection.

Les abaques sont faits selon les formules suivantes :

Moteur immergé monophasé

$$L = \frac{U \times \Delta U}{I \times 2 \times 100 \times \left(\cos\varphi \times \frac{\rho}{q} + \sin\varphi \times XI\right)}$$

Moteur immergé triphasé

$$L = \frac{U \times \Delta U}{I \times 1{,}73 \times 100 \times \left(\cos\varphi \times \frac{\rho}{q} + \sin\varphi \times XI\right)}$$

où

L = Longueur du câble immergé [m]
U = Tension nominale [V]
ΔU = Chute de tension [%]
I = Intensité nominale du moteur [A]
$\cos\varphi$ = 0,9
ρ = Résistivité : 0,02 [$\Omega mm^2/m$]
q = Section du câble immergé [mm^2]
$\sin\varphi$ = 0,436
XI = Résistance inductive : 0,078 x 10^{-3} [Ω/m]

4.5 Protection du moteur monophasé MS 402

Le moteur immergé monophasé MS 402 est équipé d'une protection qui coupe le moteur en cas d'échauffement des enroulements du moteur, mais le moteur continue d'être alimenté. Tenir compte de ceci, lorsque le moteur fait partie d'un système de commande.

Si un compresseur est utilisé dans un système de commande pour le remplissage d'air d'un réservoir, celui-ci fonctionnera même si la protection moteur a déclenché sans que d'autres précautions soient prises.

4.6 Raccordement des moteurs monophasés

4.6.1 Raccordement en monophasé (moteurs 2 fils)

Les moteurs 2 fils Grundfos MS 402 sont équipés d'une protection moteur et d'un système de démarrage et sont spécialement destinés pour un branchement direct en ligne, voir fig. 11.

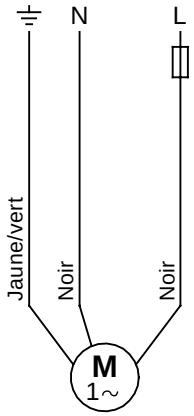

TM00 1358 5092

Fig. 11 Moteurs 2 fils

4.6.2 Raccordement en monophasé (moteurs PSC)

Les moteurs PSC sont connectés au réseau via un condensateur permanent qui doit être calculé pour un fonctionnement continu.

Selectionnez le condensateur en fonction du tableau suivant :

Moteur	Condensateur
0,25 kW	12,5 µF / 400 V / 50 Hz
0,37 kW	16 µF / 400 V / 50 Hz
0,55 kW	20 µF / 400 V / 50 Hz
0,75 kW	30 µF / 400 V / 50 Hz
1,10 kW	40 µF / 400 V / 50 Hz
1,50 kW	50 µF / 400 V / 50 Hz
2,20 kW	75 µF / 400 V / 50 Hz

Les moteurs Grundfos MS 402 PSC sont équipés d'une protection moteur et devront être connectés comme indiqué fig. 12.

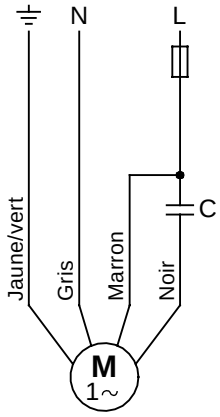

TM00 1359 5092

Fig. 12 Moteurs PSC

Voir www.franklin-electric.com et fig. 13.

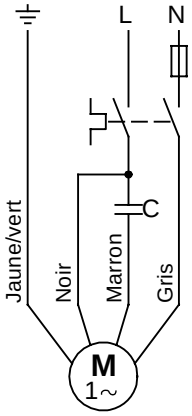

TM00 1361 1200

Fig. 13 Moteurs immergés Franklin

4.6.3 Raccordement en monophasé (moteurs 3 fils)

Les moteurs 3 fils Grundfos MS 4000 doivent être connectés au réseau via un coffret de démarrage Grundfos SA-SPM 2 ou 3 équipé de protection moteur.

Les moteurs 3 fils Grundfos MS 402 sont équipés de protection moteur et doivent être connectés au réseau via un coffret de démarrage Grundfos SA-SPM 2 ou 3 sans protection moteur.

Les raccordements des moteurs MS 4000 et MS 402 sont donnés dans le tableau ci-dessous :

Moteur	Câble	Coffret de démarrage	Réseau
0,75 kW maxi	Gris Marron Noir Jaune/vert	1 N 2 L 3 SA-SPM 2	N L PE
A partir de 1,10 kW	Gris Marron Noir Jaune/vert	1 N 2 L 3 SA-SPM 3	N L PE

4.7 Raccordement des moteurs triphasés

Les moteurs triphasés Grundfos doivent être absolument protégés, voir paragraphe *4.2.2 Moteurs triphasés*.

Pour le branchement électrique via un MP 204, se reporter à la notice d'installation et de fonctionnement du MP 204.

Lorsqu'un disjoncteur conventionnel est utilisé, le branchement électrique doit être effectué comme indiqué ci-dessous.

4.7.1 Contrôle du sens de rotation

Nota : La pompe ne doit pas être mise en route avant que la crépine d'aspiration ne soit complètement immergée.

Lorsque la pompe est sous tension, déterminer le sens correct de rotation comme ceci :

1. Démarrer la pompe et contrôler le débit et la hauteur manométrique fournis.
2. Arrêter la pompe et interchanger deux phases.
   En cas de moteurs bobinés pour un démarrage étoile-triangle, échanger U1 par V1 et U2 par V2.
3. Démarrer de nouveau la pompe et contrôler le nouveau débit et la nouvelle hauteur manométrique fournis.
4. Arrêter la pompe.
5. Comparer les résultats des points 1. et 3. Le raccordement qui donne le débit le plus important et la hauteur manométrique la plus importante est le raccordement correct.

F

F

4.7.2 Moteurs Grundfos, démarrage direct

Le raccordement des moteurs immergés Grundfos bobinés pour un démarrage direct apparaît dans le tableau ci-dessous et fig. 14.

Réseau	Câble/raccordement
	Moteurs Grundfos 4" et 6"
PE	PE (jaune/vert)
L1	U (marron)
L2	V (noir)
L3	W (gris)

Contrôler le sens de rotation comme indiqué dans le paragraphe *4.7.1 Contrôle du sens de rotation*.

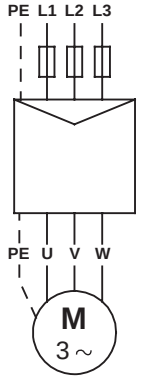

TM03 2099 3705

Fig. 14 Moteurs Grundfos, démarrage direct

4.7.3 Moteurs Grundfos, démarrage étoile-triangle

Le raccordement des moteurs immergés Grundfos bobinés pour un démarrage étoile-triangle est indiqué dans le tableau ci-dessous et fig. 15.

Raccordement	Moteurs Grundfos 6"
PE	Jaune/vert
U1	Marron
V1	Noir
W1	Gris
W2	Marron
U2	Noir
V2	Gris

Contrôler le sens de rotation comme indiqué dans le paragraphe *4.7.1 Contrôle du sens de rotation*.

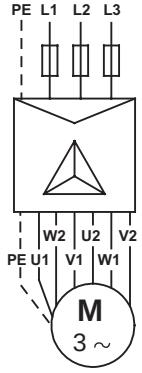

TM03 2100 3705

Fig. 15 Moteurs Grundfos, démarrage étoile-triangle

Si un démarrage étoile-triangle n'est pas requis, mais seulement un démarrage direct, les moteurs immergés doivent être raccordés comme l'indique l'illustration fig. 16.

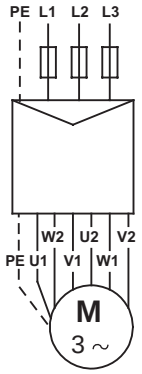

TM03 2101 3705

Fig. 16 Moteurs Grundfos, démarrage direct

4.7.4 Raccordement en cas de marquage non identifié des câbles / raccordement

Si le branchement de chaque fil électrique au réseau n'est pas indiqué afin d'assurer le sens de rotation correct, procéder ainsi :

Moteurs bobinés pour un démarrage direct

Raccorder la pompe au réseau d'alimentation.

Ensuite, contrôler le sens de rotation comme indiqué dans le paragraphe *4.7.1 Contrôle du sens de rotation*.

Moteurs bobinés pour un démarrage étoile-triangle

Les enroulements du moteur sont déterminés par un ohmètre, et les fils pour chaque enroulement sont nommés en conséquence : U1-U2, V1-V2 et W1-W2, voir fig. 17.

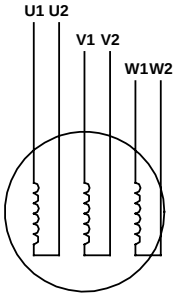

TM00 1367 5092

Fig. 17 Connexion/marquage de câble non identifié – enroulements moteur pour démarrage étoile-triangle

Si un démarrage étoile-triangle est requis, les fils doivent être raccordés comme indiqué fig. 15.

Si un démarrage direct est requis, les fils doivent être raccordés comme indiqué fig. 16.

Ensuite, contrôler le sens correct de rotation comme indiqué dans le paragraphe *4.7.1 Contrôle du sens de rotation*.

4.7.5 Moteurs Franklin, Mercury et Pleuger

Le raccordement des moteurs Franklin, Mercury et Pleuger est indiqué dans le paragraphe *4.7.4 Raccordement en cas de marquage non identifié des câbles / raccordement*.

5. Installation de la pompe

Avant de commencer n'importe quel travail sur la pompe/le moteur, s'assurer que l'alimentation électrique ait été coupée et qu'elle ne puisse pas être branchée accidentellement.

5.1 Montage du moteur sur l'hydraulique

Lorsque la partie hydraulique de la pompe et le moteur sont fournis séparément (pompes hautes), monter le moteur sur l'hydraulique comme indiqué ci-dessous :

1. Utiliser des crochets de levage lors de la manutention du moteur.
2. Placer le moteur verticalement à la surface du forage, voir fig. 18.

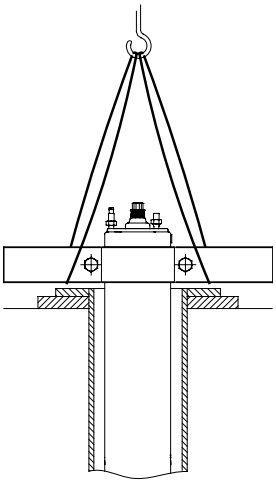

TM00 5259 2402

Fig. 18 Moteur en position verticale

3. Lever l'hydraulique au moyen de crochets de levage montés sur la barre de traction, voir fig. 19.

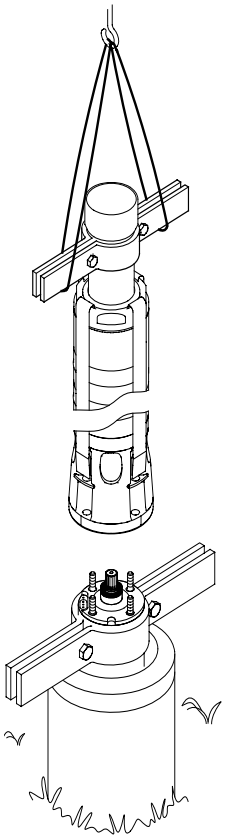

TM02 5263 2502

Fig. 19 Mettre la pompe en position

4. Placer l'hydraulique sur la partie supérieure du moteur.
5. Monter et serrer les boulons, voir tableau ci-après.

Les boulons et les écrous maintenant les tirants d'assemblage de la pompe doivent être serrés en diagonale avec les couples de serrage suivants :

Tirants d'assemblage Boulon/perno	Couple de serrage [Nm]
M8	18
M10	35
M12	45
M16	120
SP 215, 50 Hz, avec plus de 8 étages SP 215, 60 Hz, avec plus de 5 étages	150

Nota : S'assurer que l'accouplement entre l'hydraulique et le moteur soit bon.

Lors de l'assemblage du moteur et de l'hydraulique, les écrous doivent être serrés en diagonale avec les couples de serrage suivants :

Pompe/moteur Diamètre du goujon	Couple de serrage [Nm]
M8	18
M12	70
M16	150
M20	280

Nota : S'assurer que les chambres de la pompe soient alignées une fois l'assemblage terminé.

5.2 Montage et démontage des protège-câbles

Pour le démontage et le remontage des protège-câbles, voir pages 150 et 151.

Si le protège-câble est vissé sur la pompe, comme la SP 215 et les pompes chemisées, le protège-câble est monté et démonté à l'aide d'un tournevis.

Nota : S'assurer que les chambres de la pompe soient alignées une fois l'assemblage terminé.

5.3 Montage du câble immergé

5.3.1 Moteurs immergés Grundfos

Avant de raccorder le câble immergé au moteur, s'assurer que la prise du câble soit propre et sèche.

Pour faciliter le montage du câble, lubrifier les parties en caoutchouc de la prise du câble avec une pâte silicone non conductrice.

Serrer les vis tenant le câble avec les couples de serrage suivants :

MS 402 : 2,0 Nm.
MS 4000 : 2,0 Nm.
MS 6000 : 4,0-5,0 Nm.
MMS 6000 : 10 Nm.
MMS 12000 : 15 Nm.

F

5.4 Tuyauterie de refoulement

Si un outil comme une clé à griffes par exemple est utilisé lorsque la tuyauterie est fixée à la pompe, la pompe doit seulement être serrée par la chambre de refoulement.

Les joints du filetage sur la tuyauterie doivent être correctement placés et montés ensemble afin d'assurer qu'ils ne se dévisseront pas lorsqu'ils seront soumis à une torsion causée par le démarrage ou l'arrêt de la pompe.

Le bout du filetage assurant la fixation à la pompe ne doit pas être plus long que les filetages de la pompe.

Si le bruit de la pompe peut être transmis au bâtiment par les tuyaux, utiliser de préférence des tuyaux en plastique.

Nota : Les tuyaux en plastique sont seulement recommandés pour les pompes 4".

Si des tuyaux plastiques sont utilisés, la pompe doit être maintenue par une élingue fixée sur la chambre de refoulement de la pompe, voir fig. 20.

F

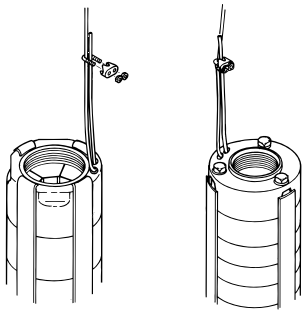

TM00 1368 2298

Fig. 20 Fixation de l'élingue

Utiliser un raccord à compression muni d'un cône pour effectuer le raccordement de la pompe et de la tuyauterie.

Dans le cas de tuyauterie à brides, les brides doivent comporter des rainures pour fixer les câbles et un flotteur, si monté.

5.5 Profondeur d'immersion maxi

Grundfos MS 402 :	150 m.
Grundfos MS 4000 :	600 m.
Grundfos MS 6000 :	600 m.
Grundfos MMS :	250 m.
Moteurs Franklin :	350 m.
Moteurs Mercury :	350 m.
Moteurs Pleuger :	350 m.

5.6 Montage du câble

Des colliers de fixation attache-câbles doivent être utilisés tous les 3 m pour fixer le câble immergé et l'élingue à la tuyauterie.

Grundfos fournit des colliers de fixation attache-câbles sur demande. Ceux-ci sont constitués d'une bande en caoutchouc épaisse de 1,5 mm et de 16 boutons.

Montage du câble : Couper la bande en caoutchouc pour que la pièce sans encoche devienne aussi longue que possible.
Mettre le bouton dans la première encoche.
Placer l'élingue le long du câble immergé, fig. 21.

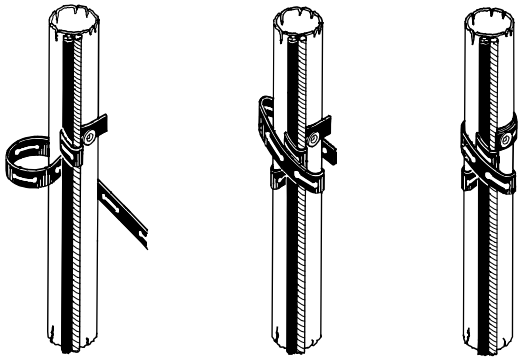

TM00 1369 5092

Fig. 21 Montage des attache-câbles

Enrouler d'un tour la bande autour du câble et de l'élingue.
Ensuite faire un deuxième tour et serrer fortement.
Pousser l'encoche sur le bouton et ensuite couper la bande.

Lorsque des sections de câble plus larges sont utilisées, il sera nécessaire d'enrouler la bande plusieurs fois.

Lorsque des tuyaux plastiques sont utilisés, un jeu doit être laissé entre chaque collier de fixation pour permettre la dilatation lorsqu'ils sont sous charge.

Lorsque des tuyaux à brides sont utilisés, les colliers de fixation doivent être placés en dessus et en dessous de chaque joint.

5.7 Descente de la pompe

Il est recommandé de vérifier le forage par une sonde avant de descendre la pompe pour s'assurer que le forage n'est pas obstrué.

Descendre la pompe avec attention dans le forage, faire attention à ne pas endommager le câble moteur.

Nota : Ne pas descendre ou coucher la pompe par le câble moteur.

5.8 Profondeur de l'installation

Le niveau dynamique de l'eau doit toujours être en dessus de la crépine d'aspiration de la pompe, voir paragraphe *3.2 Positionnement* et fig. 22.

La pression minimale à l'aspiration est indiquée dans la courbe de NPSH de la pompe.
La marge de sécurité minimale doit être de 1 mCE.

Il est recommandé d'installer la pompe de façon à ce que le moteur se trouve en dessus de la crépine du forage afin d'assurer un refroidissement optimal, selon le paragraphe *3.4 Températures du liquide/refroidissement*.

Lorsque la pompe a été installée à la profondeur requise, la tête de puits doit être rendue étanche.

Relâcher l'élingue pour que celle-ci devienne libre et la fixer à la tête du forage à l'aide de colliers.

Nota : Pour les pompes raccordées à des tuyaux plastiques, la dilatation des tuyaux doit être prise en considération lors de la mise en place à la profondeur d'installation de la pompe.

6. Démarrage et fonctionnement

6.1 Démarrage

Lorsque la pompe a été correctement branchée et est complètement immergée, elle peut être démarrée avec la vanne au refoulement fermée à approximativement un 1/3 de son ouverture totale.

Le sens de rotation doit être contrôlé comme indiqué dans le paragraphe *4.7.1 Contrôle du sens de rotation*.

Si l'eau contient des impuretés, la vanne doit être ouverte graduellement jusqu'à ce que l'eau devienne claire. La pompe ne doit pas être arrêtée avant que l'eau soit complètement claire; autrement, l'hydraulique et le clapet de retenue peuvent être obstrués.

A mesure que la vanne est ouverte, le niveau doit être contrôlé pour s'assurer que la pompe soit toujours immergée.

Le niveau dynamique de l'eau doit toujours être situé en dessus de la crépine d'aspiration de la pompe, voir paragraphe *3.2 Positionnement* et fig. 22.

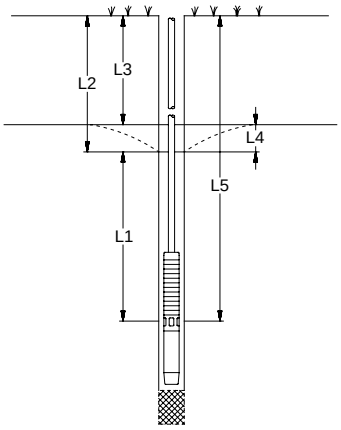

Fig. 22 Comparaison des différents niveaux d'eau

L1 : Profondeur minimum d'installation en dessous du niveau dynamique de l'eau : 1 mètre minimum.

L2 : Profondeur du niveau dynamique de l'eau.

L3 : Profondeur du niveau statique de l'eau.

L4 : Soutirage. C'est la différence entre le niveau dynamique et statique de l'eau.

L5 : Profondeur de l'installation.

Si la pompe débite plus que la production du forage, il est recommandé de mettre un coffret MP 204 ou autre chose pour protéger la pompe contre le fonctionnement à sec.

Si aucune électrode de niveau ou interrupteur à flotteur sont installés, le niveau d'eau peut descendre jusqu'à la crépine d'aspiration de la pompe et la pompe prendra de l'air.

Nota : Le pompage de l'eau contenant de l'air peut endommager la pompe et entraîner un refroidissement insuffisant du moteur.

6.2 Fonctionnement

6.2.1 Débit minimum

Pour assurer un refroidissement nécessaire du moteur, la pompe ne doit jamais être placée en dessous des limites fixées dans le paragraphe *3.4 Températures du liquide/refroidissement*.

6.2.2 Démarrages/arrêts

Type de moteur	Nombre de démarrages
MS 402	Min. 1 par an recommandé. Max. 100 par heure. Max. 300 par jour.
MS 4000	Min. 1 par an recommandé. Max. 100 par heure. Max. 300 par jour.
MS 6000	Min. 1 par an recommandé. Max. 30 par heure. Max. 300 par jour.
MMS 6000	Min. 1 par an recommandé. Max. 15 par heure. Max. 360 par jour.
MMS 8000	Min. 1 par an recommandé. Max. 10 par heure. Max. 240 par jour.
MMS 10000	Min. 1 par an recommandé. Max. 8 par heure. Max. 190 par jour.
MMS 12000	Min. 1 par an recommandé. Max. 5 par heure. Max. 120 par jour.
Franklin	Min. 1 par an recommandé. Max. 100 par jour.
Mercury 6"	Min. 1 par an recommandé. Max. 20 par heure.
Mercury 8"	Min. 1 par an recommandé. Max. 15 par heure.
Mercury 10"	Min. 1 par an recommandé. Max. 10 par heure.
Mercury 12"	Min. 1 par an recommandé. Max. 6 par heure.
Pleuger	Min. 1 par an recommandé. Max. 100 par jour.

7. Maintenance et réparation

Les pompes ne nécessitent aucune maintenance.

Toutes les pompes sont faciles à réparer.

Grundfos fournit des Kits et des outils pour la maintenance des pompes.

Les pompes peuvent être réparées dans un SAV Grundfos.

Si la pompe a été utilisée pour le pompage d'un liquide dangereux pour la santé ou toxique, elle doit être classée comme contaminée.

Si Grundfos est chargé de la réparation de la pompe, il doit être clairement indiqué quel liquide a été pompé etc... *avant* de retourner la pompe. Autrement Grundfos peut refuser la pompe.

Les frais d'envoi de la pompe chez Grundfos seront pris en charge par le client.

F

8. Tableau de recherche des pannes

Pannes	Causes	Corrections
1. La pompe ne fonctionne pas.	a) Les fusibles ont sauté.	Remplacer les fusibles. S'ils sautent à nouveau, faire un contrôle plus approfondi de l'installation électrique.
	b) Le disjoncteur différentiel a déclenché.	Réenclencher le disjoncteur.
	c) Pas d'électricité.	Contacter EDF concernant la coupure de l'alimentation.
	d) Le relais thermique a déclenché.	Réenclencher le relais thermique (automatiquement ou manuellement). S'il déclenche une nouvelle fois, vérifier la tension d'alimentation. Si la tension est O.K., voir points e) - h).
	e) La protection moteur/le contacteur est défectueux.	Remplacer la protection moteur/le contacteur.
	f) Le coffret de démarrage est défectueux.	Réparer ou remplacer le coffret de démarrage.
	g) Le circuit de commande est coupé ou défectueux.	Contrôler l'installation électrique.
	h) La protection manque d'eau a coupé l'alimentation électrique de la pompe à cause du niveau trop bas de l'eau.	Vérifier le niveau d'eau. S'il est O.K., contrôler les électrodes de niveau ou l'interrupteur à flotteur.
	i) La pompe/câble immergé est défectueux.	Réparer/remplacer la pompe/câble.
2. La pompe tourne mais ne débite pas d'eau.	a) La vanne de refoulement est fermée.	Ouvrir la vanne.
	b) Pas d'eau ou un niveau d'eau trop bas dans le forage.	Voir point 3 a).
	c) Le clapet de retenue est bloqué dans sa position fermée.	Lever la pompe et réparer ou remplacer le clapet de retenue.
	d) La crépine d'aspiration est bouchée.	Lever la pompe et nettoyer la crépine d'aspiration.
	e) La pompe est défectueuse.	Réparer/remplacer la pompe.
3. La pompe fonctionne à débit réduit.	a) L'abaissement de la nappe est plus grand que prévu.	Augmenter la profondeur d'immersion de la pompe; étrangler la pompe ou remplacer celle-ci par un modèle plus petit pour avoir un plus petit débit.
	b) Le sens de rotation n'est pas correct.	Voir paragraphe *4.7.1 Contrôle du sens de rotation*.
	c) Les vannes au refoulement sont partiellement fermées ou bloquées.	Contrôler et nettoyer/remplacer les vannes, si nécessaire.
	d) Le tuyau de refoulement est bouché par des impuretés (ocre).	Nettoyer/remplacer le tuyau de refoulement.
	e) Le clapet de retenue de la pompe est partiellement bloqué.	Lever la pompe et contrôler/remplacer le clapet.
	f) La pompe et le tuyau montant sont partiellement bouchés par des impuretés (ocre).	Lever la pompe. Contrôler et nettoyer ou remplacer la pompe, si nécessaire. Nettoyer les tuyaux.
	g) La pompe est défectueuse.	Réparer/remplacer la pompe.
	h) Fuite de la tuyauterie.	Contrôler et réparer les tuyaux.
	i) Le tuyau montant est défectueux.	Remplacer le tuyau montant.
4. Nombre de démarrages/ arrêts trop fréquents.	a) La pression différentielle au contacteur manométrique entre le démarrage et l'arrêt est trop petite.	Augmenter la pression différentielle. Cependant, la pression d'arrêt ne doit pas dépasser la pression de fonctionnement de l'hydrophore, et la pression de marche doit être suffisamment élevée afin d'assurer une alimentation suffisante d'eau.
	b) Les électrodes de niveau d'eau ou interrupteur de niveau dans le réservoir ne sont pas installés correctement.	Régler les électrodes, les interrupteurs de niveau pour assurer un temps convenable entre le déclenchement et l'enclenchement de la pompe. Voir les notices d'installation et de fonctionnement pour les appareils automatiques utilisés. Si les intervalles de temps entre l'enclenchement et le déclenchement de la pompe ne peuvent pas être changés par des commandes automatiques, le débit de la pompe peut éventuellement être réduit par étranglement de la vanne de refoulement.
	c) Le clapet de retenue fuit ou se maintient fermé dans sa position demi-ouverte.	Lever la pompe, et nettoyer/remplacer le clapet de retenue.
	d) Le volume d'air dans l'hydrophore/ le réservoir à diaphragme est trop petit.	Régler le volume d'air dans l'hydrophore/le réservoir à diaphragme en accord avec les notices d'installation et d'entretien.
	e) L'hydrophore/le réservoir à diaphragme est trop petit.	Augmenter la capacité de l'hydrophore/du réservoir à diaphragme (remplacer par un autre réservoir).
	f) Le diaphragme du réservoir est défectueux.	Contrôler le réservoir.

F

9. Contrôle du moteur et du câble

1. Tension d'alimentation 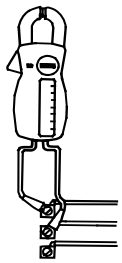 TM00 1371 5092	Mesurer la tension entre phases avec un voltmètre; entre phases et neutre en ce qui concerne les moteurs monophasés. Connecter le voltmètre aux bornes du disjoncteur.	La tension doit, lorsque le moteur est chargé, être comprise dans le domaine spécifié dans le paragraphe *4.1 Généralités*. Le moteur peut éventuellement griller s'il y a une trop grande variation de tension. Une large variation de la tension entraînerait une surintensité qui peut détériorer le moteur. Dans ce cas, arrêter la pompe jusqu'à ce que le défaut soit corrigé.
2. Consommation de courant 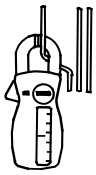 TM00 1372 5092	Mesurer l'intensité sur chaque phase pendant que la pompe est en marche à une pression constante (si possible à un débit où le moteur est le plus chargé). Pour l'intensité de service, voir la plaque de données.	Dans les moteurs triphasés, le déséquilibre entre phases ne doit pas excéder 5%. Si l'intensité excède l'intensité à pleine charge, ceci peut être causé par : • Les contacts de la protection moteur sont grillés. Remplacer les contacts ou le coffret de démarrage pour le fonctionnement en monophasé. • Mauvais contact au niveau du discontacteur ou des joints de câble. Voir point 3. • Tension trop élevée ou trop basse du réseau. Voir point 1. • Les enroulements du moteur sont court-circuités ou partiellement coupés. Voir point 3. • Une pompe avariée surcharge le moteur. Lever la pompe pour inspection. • La résistance des enroulements moteur varie trop (en triphasé). Inverser l'ordre des phases pour avoir une charge plus uniforme. Si cela ne vous aide pas, voir point 3.
Points 3 et 4 : Les mesures ne sont pas nécessaires lorsque la tension de réseau et la consommation de courant sont normales.		
3. Résistance des enroulements 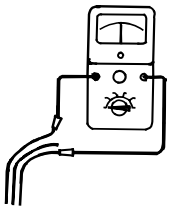 TM00 1373 5092	Déconnecter le câble immergé. Mesurer la résistance des enroulements en tenant compte de la résistance du câble.	Pour les moteurs triphasés, la variation entre valeur mini et valeur maxi ne doit pas excéder 10%. Si la variation est supérieure à 10%, lever la pompe. Mesurer le moteur, le câble moteur et le câble immergé séparément, et réparer ou remplacer les pièces défectueuses. **Nota :** Dans le cas des moteurs monophasés 3 fils, les enroulements supportent la résistance la plus basse.
4. Résistance d'isolement 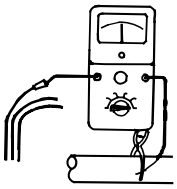 TM00 1374 5092	Déconnecter le câble immergé. Mesurer la résistance d'isolement de chaque phase à la terre. Veiller à ce que la prise de terre soit faite soigneusement.	Si la résistance d'isolement mesurée est plus petite que 0,5 MΩ, la pompe doit être levée pour réparation du moteur ou du câble. Les prescriptions locales peuvent spécifier d'autres valeurs pour la résistance d'isolement.

10. Mise au rebut

Ce produit ou des parties de celui-ci doit être mis au rebut tout en préservant l'environnement :

1. Utiliser le service local public ou privé de collecte des déchets.
2. Si ce n'est pas possible, envoyer ce produit à Grundfos ou au réparateur agréé Grundfos le plus proche.

F

INDICE

Prima dell'installazione leggere attentamente le presenti istruzioni di installazione e funzionamento. Per il corretto montaggio e funzionamento, rispettare le disposizioni locali e la pratica della regola d'arte.

Queste istruzioni sono da applicare ai motori sommersi Grundfos, tipo MS e MMS, e alle pompe sommerse Grundfos, tipo SP, provviste di motori sommersi, tipo Grundfos MS o MMS, Franklin 4"-8", Mercury 6"-12" e Pleuger 6"-12".

Se la pompa viene accoppiata ad un motore diverso dal tipo Grundfos MS o MMS, siate certi che i dati di targa di quest'ultimo non siano in conflitto con queste istruzioni.

1. Consegna e immagazzinamento

1.1 Consegna

Le pompe sommerse Grundfos devono essere tenute nel loro imballo originale fino al momento dell'installazione.

Abbiate cura di non sottoporre la pompa a flessione quando essa non è più imballata: ciò potrebbe causare il disassamento ed il danneggiamento della pompa stessa.

Nota: Le pompe devono rimanere nell'imballo fino al momento dell'installazione, da effettuarsi in posizione verticale.
Quando la pompa e il motore sono fornite come unità separate, regolate il motore alla pompa come descritto nella sezione *5.1 Assemblaggio del motore con la pompa*.

Nota: La targhetta sciolta che viene fornita con la pompa, deve essere fissata vicino all'apparecchiatura elettrica di comando.

La pompa non deve essere sottoposta ad inutili urti.

1.2 Immagazzinamento e movimentazione

Temperatura di magazzinaggio

Pompa: da –20°C a +60°C.
Motore: da –20°C a +70°C.

I motori devono essere immagazzinati al coperto, in locale secco e ben ventilato.

Nota: Se i motori MMS rimangono immagazzinati più di un anno, l'albero deve essere ruotato almeno una volta al mese.
Se un motore è stato immagazzinato più di un anno, prima dell'utilizzo le parti rotanti devono essere disassemblate e controllate prima dell'uso.

La pompa non deve essere esposta ai raggi solari.

Se la pompa non è imballata, dovrà essere conservata in magazzino orizzontalmente, adeguatamente sostenuta, oppure verticalmente, per prevenire il possibile disassamento. Verificare che la pompa non possa rotolare o cadere. Durante lo stoccaggio, la pompa può essere sostenuta come mostrato in figura 1.

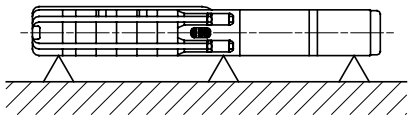

Fig. 1 Posizione della pompa durante l'immagazzinaggio

1.2.1 Protezione dal freddo

Se la pompa viene posta in magazzino dopo essere stata usata, deve essere conservata in un luogo in cui la temperatura non scenda al di sotto di 0°C, oppure assicurarsi che il liquido motore sia addizionato con antigelo.

2. Dati generali

2.1 Applicazioni

Le pompe sommerse Grundfos, tipo SP, sono progettate per un'ampia gamma di applicazioni, come l'approvvigionamento idrico per abitazioni private, per acquedotti ed industrie. Indispensabili in caso di abbassamento del livello di falda e per l'aumento pressione.

Immergete completamente la pompa sotto il livello dell'acqua quando la installate sia orizzontalmente che verticalmente. Vedere paragrafo *3.2 Limiti di posizionamento*.

2.2 Liquidi pompati

Liquidi puliti, **non esplosivi**, senza particelle solide o fibre.

Il contenuto massimo di sabbia nell'acqua non deve superare i 50 g/m^3. Una più alta concentrazione di sabbia ridurrà la vita della pompa ed aumenterà il rischio di avaria.

Nota: Se la pompa è utilizzata per pompare liquidi con una densità superiore all'acqua, occorrerà usare un motore con una potenza proporzionalmente maggiore.

Contattate Grundfos qualora intendiate pompare un liquido con una viscosità superiore a quella dell'acqua.

I modelli speciali SP A N, SP A R, SP N, SP R e SPE sono progettati per veicolare liquidi con aggressività superiore a quella dell'acqua potabile.

Per la temperatura massima del liquido vedere paragrafo *3.4 Temperatura del liquido / raffreddamento*.

2.3 Livello sonoro

Il livello sonoro è stato misurato secondo le normative CE; in particolare la Direttiva Macchine 98/37/EC.

Livello sonoro delle pompe

Applicabile a pompe sommerse in acqua, senza valvola esterna di regolazione.

Tipo di pompa	$\overline{L}_{pA}$ [dB(A)]
SP 1A	<70
SP 2A	<70
SP 3A	<70
SP 5A	<70
SP 8A	<70
SP 14A	<70
SP 17	<70
SP 30	<70
SP 46	<70
SP 60	<70
SP 77	<70
SP 95	<70
SP 125	79
SP 160	79
SP 215	82

Livello sonoro del motore

Il livello sonoro dei motori Grundfos MS e MMS è inferiore a 70 dB(A).

Per altri motori: Guardare le istruzioni di installazione e funzionamento.

3. Preparazione

Prima di iniziare ad operare sulla pompa, accertarsi che l'alimentazione elettrica sia stata tolta e che non possa venire accidentalmente riattivata.

3.1 Controllo del liquido nel motore

I motori sommersi sono riempiti in fabbrica con liquido speciale non tossico con funzione antigelo fino a –20°C.

Nota: Il liquido nel motore deve essere controllato e rabboccato se necessario.

Nota: Se c'è rischio di gelo o nel caso in cui il motore sia stato completamente svuotato, si deve usare il liquido speciale Grundfos. In caso diverso è sufficiente acqua pulita.
(**Non** usare **mai** acqua distillata.)

Il riempimento del liquido si esegue come di seguito indicato.

3.1.1 Motori sommersi Grundfos MS 4000 e MS 402

Il foro per il riempimento del liquido è situato in una delle seguenti posizioni:

MS 4000: nella parte superiore del motore.

MS 402: al piede del motore.

1. Posizionare la pompa come mostrato in figura 2. La vite per il riempimento del liquido deve essere nel punto più alto del motore.
2. Togliere la vite di riempimento.
3. Con la siringa (fig. 2) iniettare il liquido fino a farlo fuoriuscire dal foro di riempimento.
4. Riavvitare la vite a fondo prima di movimentare la pompa.

Coppia di serraggio:

MS 4000: 3,0 Nm.

MS 402: 2,0 Nm.

La pompa ora è pronta per l'installazione.

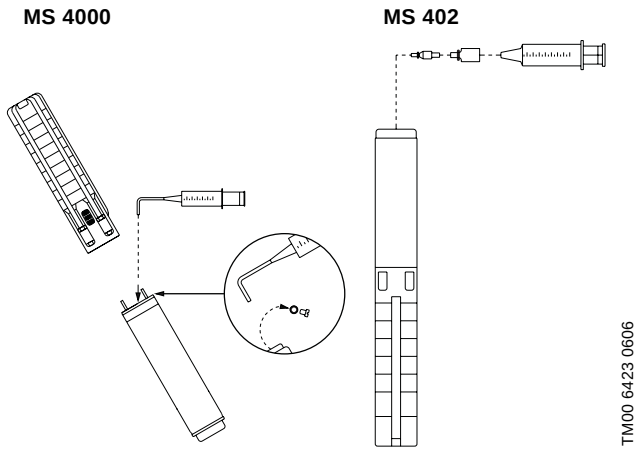

Fig. 2 Posizione della pompa durante il riempimento – MS 4000 e MS 402

3.1.2 Motori sommersi Grundfos MS 6000

- Se il motore viene fornito come componente separato, è necessario controllare il livello del liquido prima di effettuare il collegamento con la parte idraulica, vedere fig. 3.
- Su elettropompe consegnate da Grundfos già assemblate, il livello del liquido è già stato controllato.
- Durante le manutenzioni, in ogni caso, controllare il livello del liquido, vedere fig. 3.

Procedura di riempimento (vedere fig. 3):

Il foro di riempimento del liquido è situato sulla testa del motore.

1. Posizionare la pompa come mostrato in figura 3. La vite per il riempimento del liquido è nel punto più alto del motore.
2. Togliere la vite di riempimento.
3. Con la siringa (fig. 3) iniettare il liquido fino a farlo fuoriuscire dal foro di riempimento.
4. Riavvitare la vite a fondo prima di movimentare la pompa.

Coppia di serraggio: 3,0 Nm.

La pompa ora è pronta per l'installazione.

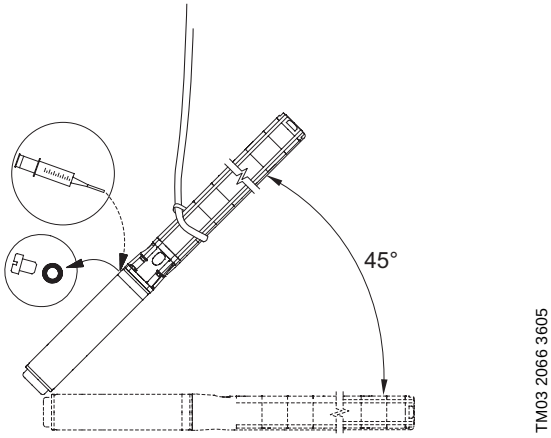

Fig. 3 Posizione della pompa durante il riempimento – MS 6000

3.1.3 Motori sommersi Grundfos MMS 6000, MMS 8000, MMS 10000 e MMS 12000

Procedura di riempimento (vedere fig. 4):

1. Posizionare il motore a 45° con la parte superiore rivolta verso l'alto.
2. Svitare il tappo A e posizionare un imbuto nel foro.
3. Versare acqua potabile nel motore finché il liquido all'interno del motore non inizia a fuoriuscire da A.
   Nota: Non utilizzare il liquido del motore perché contiene olio.
4. Rimuovere l'imbuto e rimontare il tappo A.

Nota: Prima di accoppiare il motore con una pompa, dopo un lungo periodo di immagazzinaggio, lubrificare la tenuta meccanica aggiungendo alcune gocce d'acqua e ruotando l'albero.

La pompa ora è pronta per l'installazione.

I

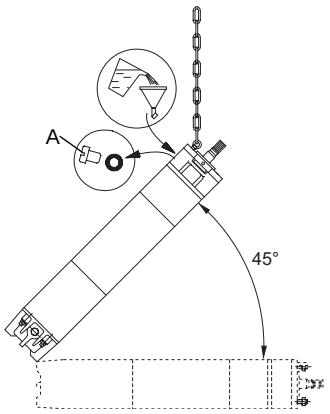

TM03 2065 3605

Fig. 4 Posizione del motore MMS durante il riempimento

3.1.4 Motori sommersi Franklin con potenza maggiore o uguale a 3 kW

Il livello del liquido in motori da 4" e 6" viene controllato misurando la distanza esistente tra la piastra d'appoggio e il diaframma in gomma. Questa distanza può essere misurata inserendo un'astina nel foro fino a toccare il diaframma, vedere fig. 5.
Nota: Fare attenzione a non danneggiare il diaframma.

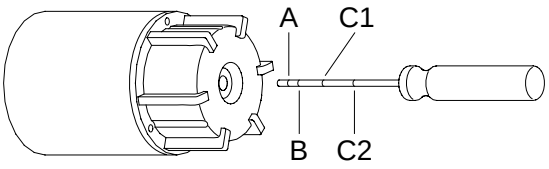

TM00 1353 5092

Fig. 5 Misurazione della distanza tra la piastra inferiore e il diaframma

La seguente tabella mostra la corretta distanza che deve intercorrere tra la piastra d'appoggio e il diaframma:

Motore	Dimensione	Distanza
Franklin 4", da 0,25 a 3 kW (guardare la fig. 6a)	A	8 mm
Franklin 4", da 3 a 7,5 kW (guardare la fig. 6b)	B	16 mm
Franklin 6", da 4 a 45 kW (guardare la fig. 6c)	C1	35 mm
Franklin 6", da 4 a 22 kW (guardare la fig. 6d)	C2	59 mm

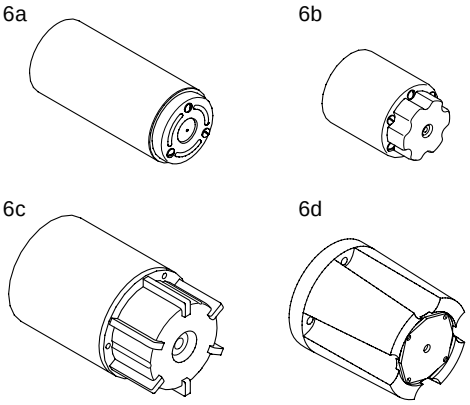

TM00 6422 3695

Fig. 6 Motori sommersi Franklin

Se la distanza non è corretta, eseguire una correzione come descritto nel paragrafo *3.1.5 Motori sommersi Franklin*.

3.1.5 Motori sommersi Franklin

Il livello del liquido in motori da 8" è controllato nel modo seguente:

1. Con un cacciavite estrarre il filtro di fronte alla valvola sulla testa del motore. Il filtro può avere l'apposito incavo per cacciavite. La posizione della valvola di riempimento è mostrata in fig. 7.
2. Inserire la siringa contro la valvola ed iniettare il liquido, fig. 7. Se l'otturatore della valvola è spinto dalla siringa troppo a fondo, può essere danneggiato e non fare più tenuta.
3. Togliere l'aria dal motore spingendo con cautela l'estremità della siringa contro la valvola.
4. Ripetere l'operazione di iniezione del liquido e rilascio dell'aria fino a che il liquido comincerà ad uscire o il diaframma sarà nella giusta posizione (Franklin da 4" e da 6").
5. Reinserire il filtro a fine riempimento.

La pompa ora è pronta per l'installazione.

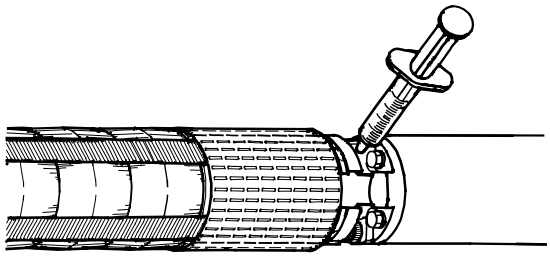

TM00 1354 5092

Fig. 7 Posizione della valvola di riempimento

3.1.6 Motori sommersi Mercury

Il livello del liquido nel motore è controllato come descritto per i motori Franklin da 8", vedere paragrafo *3.1.5 Motori sommersi Franklin*.

3.1.7 Motori sommersi Pleuger

Il livello del liquido nel motore è controllato come descritto per i motori Franklin da 8", vedere paragrafo *3.1.5 Motori sommersi Franklin*.

3.2 Limiti di posizionamento

Se la pompa viene installata in una posizione accessibile alle persone, bisogna evitare ogni possibilità di contatto tra giunto e persone, dotandola di uno schermo protettivo.

A seconda del tipo di motore, la pompa può essere installata sia verticalmente che orizzontalmente. La lista completa dei motori adatti per l'installazione orizzontale è illustrata nella sezione *3.2.1*.

Se la pompa è installata orizzontalmente la camera di mandata **non deve mai** risultare al di sotto del piano orizzontale, vedere fig. 8.

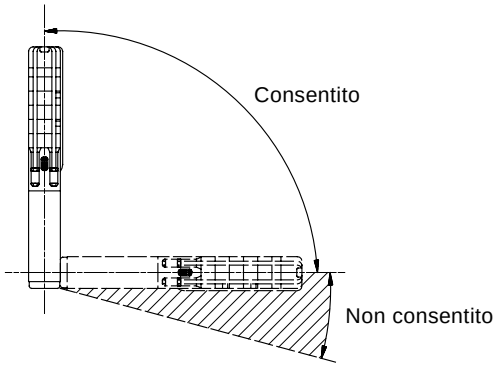

TM00 1355 5092

Fig. 8 Limiti di posizionamento

Se la pompa è installata orizzontalmente in una vasca, si raccomanda di inserirla in una camicia di raffreddamento.

3.2.1 Idoneità dei motori all'installazione orizzontale

Tipo del motore	Potenza nominale 50 Hz	Potenza nominale 60 Hz
	[kW]	[kW]
MS	Tutte le taglie	Tutte le taglie
MMS 6000	3,7 a 18,5	3,7 a 18,5
MMS 8000	22,0 a 63,0	22,0 a 63,0
MMS 10000	75,0 a 110,0	75,0 a 110,0
MMS 12000	147,0 a 190,0	–

Se, con motori Franklin 4" fino a 2,2 kW inclusi, si hanno più di 10 avviamenti al giorno, si raccomanda di inclinare la pompa di 15° verso l'alto in modo da minimizzare la spinta verso l'alto e la conseguente usura del cuscinetto reggispinta.

Nota: Durante il funzionamento l'interconnettore di aspirazione deve sempre essere sommerso.

Se la pompa viene usata per il pompaggio di liquidi caldi (da 40°C a 60°C), particolare cura va posta nell'evitare che le persone vadano a contatto con la pompa e/o l'impianto.

3.3 Diametro di pompa/motore

Il massimo diametro di pompa/motore appare nelle tabelle a pag. 146 e 147.

Verificate che il pozzo non presenti restrizioni o ostacoli alla discesa della pompa.

3.4 Temperatura del liquido / raffreddamento

I valori di massima temperatura del liquido e minima velocità del liquido attorno al motore, appaiono dalla tabella di seguito riportata.

Si raccomanda di installare il motore sopra il filtro del pozzo in modo da assicurargli il necessario raffreddamento.

Nota: Nelle installazioni dove non si hanno le velocità stabilite per il liquido si dovrà provvedere con una camicia di raffreddamento.

Se si presenta il rischio di sedimento sul motore dovuto a sabbia, l'uso di una camicia di raffreddamento è raccomandato.

3.4.1 Massima temperatura del liquido

Considerando le parti in gomma della pompa e del motore, la temperatura del liquido non deve superare i 40°C (~105°F). Guardare la tabella sottostante.

La pompa può operare a temperature comprese tra 40°C e 60°C (~105°F e 140°F) sostituendo le parti in gomma ogni tre anni.

Motore	Installazione		
	Velocità del liquido attorno al motore	Verticale	Orizzontale
Grundfos MS e MMS	**Convezione libera 0 m/s**	20°C (~68°F)	Camicia di raffr. consigliata
Grundfos MS	**0,15 m/s**	40°C (~105°F)	40°C (~105°F)
Grundfos MS I *	**0,15 m/s**	60°C (~140°F) Camicia di raffr. consigliata	60°C (~140°F) Camicia di raffr. consigliata
Grundfos MMS	**0,15 m/s**	25°C (~77°F)	25°C (~77°F)
Franklin 4"	**0,08 m/s**	30°C (~85°F)	30°C (~85°F)
Franklin 6" e 8"	**0,16 m/s**	30°C (~85°F)	30°C (~85°F)
Mercury	**0,15 m/s**	25°C (~77°F)	25°C (~77°F)
Pleuger	**0,5 m/s**	30°C (~86°F)	30°C (~86°F)

* A una pressione di minimo 1 bar (1 MPa)

Nota: Per convezione libera si intende il caso in cui il diametro del pozzo sia 2" maggiore rispetto al diametro del motore.

Motori di altre marche: Vedere le specifiche costruttive.

3.5 Collegamento della tubazione

Per evitare trasmissione di rumore, ma solo per pompe da 4", è utile l'impiego di tubi in plastica.

In queste installazioni la pompa deve essere affrancata ad una fune metallica di sicurezza non in tensione.

Assicurarsi che il tubo di plastica usato sia compatibile con l'effettiva temperatura del liquido e la pressione della pompa.

L'accoppiamento fra pompa e tubo in plastica dovrà essere effettuato con un giunto a compressione.

I

4. Collegamenti elettrici

Prima di iniziare ad operare sulla pompa, accertarsi che l'alimentazione elettrica sia stata tolta e che non possa venire accidentalmente riattivata.

4.1 Generalità

I collegamenti dovranno essere eseguiti secondo le regole vigenti da personale qualificato.

La tensione di alimentazione, la corrente e il cos φ sono indicati sulla targhetta motore.

Le variazioni di tensione sopportabili dai motori sommersi Grundfos **MS** e **MMS** sono –10%/+6% del valore nominale (incluse le perdite nei cavi).

Inoltre bisogna verificare che le fasi siano equilibrate, cioè la stessa differenza di tensione fra le varie fasi; vedere paragrafo *9. Tabella ricerca guasti motore e cavo* punto 2.

La pompa deve essere provvista di un collegamento di messa a terra.

La pompa deve essere collegata ad un interruttore generale esterno con una distanza minima fra i contatti di 3 mm.

I

Se i motori Grundfos MS con trasmettitore di temperatura incorporato (Tempcon) non sono installati con una protezione Grundfos del motore, devono essere collegati a un condensatore da 0,47 μF approvato per il funzionamento fase-fase (IEC 384-14) in conformità alla direttiva CE in materia di EMC (89/336/CEE).
Il condensatore deve essere collegato alle due fasi a cui è collegato il trasmettitore di temperatura, vedere fig. 9.

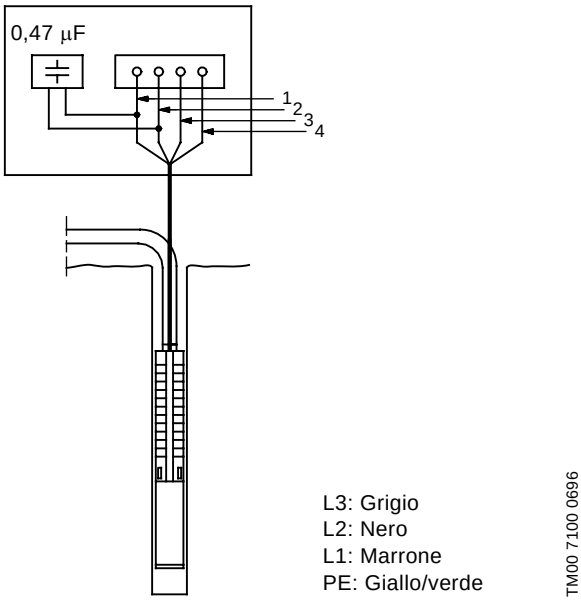

Fig. 9 Collegamento del condensatore

I motori sono predisposti per avviamento diretto o stella/triangolo (Y/Δ) e la corrente di avviamento varia da 4 a 6 volte la corrente nominale del motore.

La durata dell'avviamento è di circa 0,1 sec.

4.1.1 Funzionamento con convertitore di frequenza

Motori Grundfos

I motori trifase Grundfos possono essere azionati da un convertitore di frequenza.

Nota: Se si collega un motore Grundfos MS con trasmettitore di temperatura a un convertitore di frequenza, il fusibile incorporato nel trasmettitore si fonderà, rendendolo cos φ inattivo. Il trasmettitore non potrà essere riattivato. In questo caso il motore funzionerà come se il trasmettitore non ci fosse.

Qualora fosse necessario dotare il motore sommerso di un trasmettitore di temperatura, è possibile ordinare un sensore Grundfos tipo Pt100.

Se il motore è azionato da un convertitore di frequenza, non è consigliabile far funzionare il motore ad una frequenza superiore a quella nominale (50 o 60 Hz). Per il buon funzionamento della pompa, è importante non ridurre mai la frequenza (e conseguentemente la velocità) al di sotto di un valore tale per cui non si riesca più ad assicurare il necessario raffreddamento del motore.

Per evitare danni al corpo pompa, bisogna assicurarsi che il motore si fermi quando il flusso sia inferiore a 0,1 volte quello nominale.

Il motore, se azionato da un convertitore di frequenza, può ricevere picchi di tensione pericolosi.

I motori tipo MS 402, per tensioni di alimentazione fino a 440 V inclusi (vedere targhetta motore), devono essere protetti contro picchi di tensione superiori a 650 V (valore di picco) fra i morsetti di alimentazione.

E' raccomandabile proteggere gli altri tipi di motore da picchi di tensione superiori a 850 V.

I suddetti disturbi possono essere eliminati con l'installazione di un **filtro RC** fra il convertitore ed il motore.

Un possibile incremento del rumore del motore può essere abbattuto con l'installazione di un **filtro LC**, il quale può anche eliminare i picchi di tensione dal convertitore di frequenza.

Per altre informazioni contattate il costruttore del convertitore o Grundfos.

Altre marche di motori diversi da Grundfos

Prendete contatto con Grundfos o il costruttore del motore.

4.2 Protezione del motore

4.2.1 Motori monofase

I motori monofase tipo MS 402 sono dotati di interruttore termico interno e non richiedono altre protezioni.

Quando scatta la protezione termica, i morsetti del motore rimangono sotto tensione.
Quando si sarà debitamente raffreddato, ripartirà automaticamente.

I motori monofase tipo MS 4000 devono essere protetti. L'apparecchiatura di protezione può essere inserita nel quadro elettrico.

I motori monofase Franklin 4" PSC necessitano di un motoavviatore.

4.2.2 Motori trifase

I motori Grundfos **MS** sono disponibili con o senza trasmettitore di temperatura incorporato.

I motori **con** il trasmettitore di temperatura incorporato e funzionante devono essere protetti per mezzo di:

- un motoavviatore con relè termico oppure
- un MTP 75 e un motoavviatore con relè termico oppure
- un MP 204 e un contattore.

I motori **senza** il trasmettitore di temperatura o con il trasmettitore scollegato devono essere protetti per mezzo di:

- un motoavviatore con relè termico oppure
- un MP 204 e un contattore.

I motori Grundfos **MMS** non sono dotati di trasmettitore di temperatura. Il sensore Pt100 è disponibile come accessorio.

I motori **con** un sensore Pt100 devono essere protetti per mezzo di:

- un motoavviatore con relè termico oppure
- un MP 204 e un contattore.

I motori **senza** un sensore Pt100 devono essere protetti per mezzo di:

- un motoavviatore con relè termico oppure
- un MP 204 e un contattore.

4.2.3 Regolazione del motoavviatore

A motore freddo, il tempo di intervento della protezione deve essere inferiore a 10 sec. con 5 volte il valore della corrente nominale del motore.

Nota: Se questa condizione non è verificata la garanzia decade.

Per assicurare la migliore protezione regolare il relè termico nel seguente modo:

1. Regolare l'interruttore termico al valore della corrente nominale del motore.
2. Far funzionare la pompa per circa mezz'ora in condizioni normali.
3. Abbassare lentamente la taratura dell'interruttore termico fino a fare intervenire il relè termico.
4. Aumentare ora tale valore del 5%.

Il valore massimo ammesso è pari al valore nominale della corrente del motore.

Per motori con avviamento Y/Δ vale quanto detto sopra ma il valore selezionato sarà al massimo 0,58 volte la corrente di targa del motore.

Il tempo di scambio con avviamento Y/Δ o autotrasformatore non deve superare 2 secondi.

4.3 Protezione antifulmine

Si può dotare l'installazione di speciali sistemi che proteggono contro le sovratensioni causate da fulmini, vedere fig. 10.

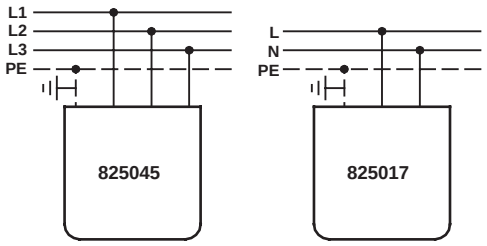

TM00 1357 3605

Fig. 10 Montaggio di una protezione contro la sovratensione

Tale protezione non è comunque efficace contro la fulminazione diretta sull'installazione.

La sua migliore collocazione è il più vicino possibile al motore, sempre in accordo con le norme di installazioni elettriche. Richiedete a Grundfos le protezioni antifulmine.

I motori sommersi tipo MS 402, essendo dotati di alto isolamento, non richiedono queste particolari protezioni.

E' disponibile un kit di giunzione cavo sommerso completo di protezione antifulmine per motori Grundfos da 4" (cod. 799911 / 799912).

4.4 Dimensione cavi

Verificate che i cavi sommersi siano del tipo sommergibile e compatibile con la temperatura del liquido.

La sezione (q) del cavo deve soddisfare i seguenti requisiti:

1. Il cavo dovrà avere una portata compatibile con la corrente nominale (I) del motore.
2. La caduta di tensione dovrà garantire comunque il buon funzionamento al motore.

Usate la maggiore tra le sezioni individuate al punto 1 e 2.

Rif. 1: La seguente tabella indica le portate dei cavi (cioè la massima corrente sopportabile dal cavo sommerso) in ambiente con temperatura max. di 30°C.
Per temperatura superiori contattare Grundfos.

Nella scelta del cavo verificate pertanto che la corrente in esame non superi il valore della portata (I_S) del cavo.

Per avviamento Y/Δ, dimensionate i cavi affinchè il valore di 0,58 x corrente nominale del motore non superi la portata in corrente (I_S) del cavo.

q [mm^2]	I_S [A]	q [mm^2]	I_S [A]
1,5	18,5	50	153
2,5	25	70	196
4	34	95	238
6	43	120	276
10	60	150	319
16	80	185	364
25	101	240	430
35	126	300	497

Rif. 2:
Nota: La sezione del cavo sommerso deve essere sufficiente a soddisfare i requisiti specificati al paragrafo *4.1 Generalità*.

La caduta di tensione del cavo scelto, può essere calcolata dai diagrammi di pagg. 148 e 149, dove

I = Corrente nominale del motore.
Per avviamento Y/Δ
I = corrente nominale x 0,58.

Lx = Lunghezza del cavo che determina la caduta di tensione pari all'1% di quello di linea.

$$Lx = \frac{\text{lunghezza del cavo}}{\text{caduta di tensione ammessa \%}}$$

q = Sezione del cavo sommerso.

Collegate con una linea retta il valore di corrente del motore ed il valore Lx imposto. Tale linea intersecherà l'asse delle sezioni q nel punto cercato. Scegliete il valore immediatamente superiore a questo.

I diagrammi sono costruiti sulla base della seguente formula:

Motori monofase

$$L = \frac{U \times \Delta U}{I \times 2 \times 100 \times \left(\cos\varphi \times \frac{\rho}{q} + \sin\varphi \times XI\right)}$$

Motori trifase

$$L = \frac{U \times \Delta U}{I \times 1{,}73 \times 100 \times \left(\cos\varphi \times \frac{\rho}{q} + \sin\varphi \times XI\right)}$$

dove

L = Lunghezza del cavo sommerso [m]
U = Tensione di targa [V]
ΔU = Caduta di tensione [%]
I = Corrente nominale del motore [A]
cos φ = 0,9
ρ = Resistenza specifica: 0,02 [Ωmm^2/m]
q = Sezione del cavo sommerso [mm^2]
sin φ = 0,436
XI = Resistenza induttiva: 0,078 x 10^{-3} [Ω/m]

4.5 Controllo dei motori monofase MS 402

Questi motori sono dotati di interruttore termico interno che ferma il motore in caso di eccessivo riscaldamento degli avvolgimenti senza peraltro togliere tensione al motore. Occorre tenerlo presente quando il motore è parte di un sistema di controllo.

Se c'è un compressore inserito in un sistema di controllo unitamente ad un filtro ocra, il compressore continuerà a funzionare anche quando la protezione del motore avrà provveduto a fermarlo, a meno di altre speciali precauzioni utilizzate.

I

4.6 Collegamento dei motori monofase

4.6.1 Collegamento dei motori monofase del tipo a 2 fili

I motori MS 402 2-fili hanno incorporato l'interruttore termico oltre al dispositivo di avviamento e pertanto possono essere collegati direttamente alla linea, fig. 11.

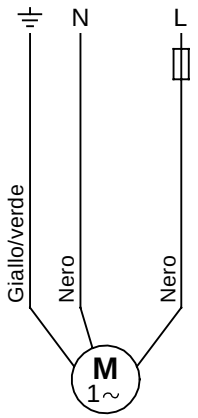

TM00 1358 5092

Fig. 11 Collegamento dei motori monofase del tipo a 2 fili

4.6.2 Collegamento dei motori monofase PSC

I motori PSC (condensatore permanentemente inserito) richiedono un condensatore di avviamento di dimensioni adeguate.

Vedere tabella seguente:

Motore	Condensatore
0,25 kW	12,5 µF / 400 V / 50 Hz
0,37 kW	16 µF / 400 V / 50 Hz
0,55 kW	20 µF / 400 V / 50 Hz
0,75 kW	30 µF / 400 V / 50 Hz
1,10 kW	40 µF / 400 V / 50 Hz
1,50 kW	50 µF / 400 V / 50 Hz
2,20 kW	75 µF / 400 V / 50 Hz

I motori MS 402 PSC incorporano l'interruttore termico di protezione e possono essere collegati alla rete come in fig. 12.

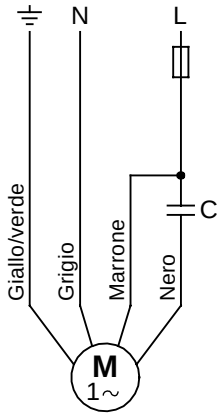

TM00 1359 5092

Fig. 12 Motori monofase PSC

Vedere www.franklin-electric.com e fig. 13.

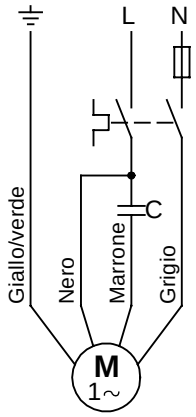

TM00 1361 1200

Fig. 13 Motori sommersi Franklin

4.6.3 Collegamento dei motori monofase del tipo a 3 fili

I motori Grundfos MS 4000 3-fili necessitano di un motoavviatore tipo SA-SPM 2 o 3.

I motori Grundfos MS 402 3-fili necessitano di SA-SPM 2 o 3 senza il motoprotettore essendo incorporato nel motore.

I collegamenti dei motori MS 4000 e MS 402 sono riportati nella tabella seguente:

Motore	Cavo	Motoavviatore	Linea
Fino a 0,75 kW	Grigio Marrone Nero Giallo/verde	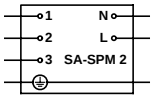	N L PE
Da 1,10 kW	Grigio Marrone Nero Giallo/verde	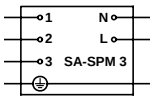	N L PE

4.7 Collegamento dei motori trifase

I motori sommersi trifase devono essere protetti, vedere il paragrafo *4.2.2 Motori trifase*.

Se utilizzate il MP 204 fate riferimento alle specifiche istruzioni.

4.7.1 Controllo del senso di rotazione

Nota: La pompa non può essere avviata fino a che l'interconnettore di aspirazione non è stato completamente immerso.

Una volta collegata l'alimentazione elettrica, verificare il senso di rotazione come segue:

1. Avviare la pompa e controllare la portata e la prevalenza fornite.
2. Eventualmente fermare la pompa e scambiare le fasi.
   Nel caso di motori con avviamento Y/Δ, cambiare U1 con V1 e U2 con V2.
3. Avviare la pompa e controllare la portata e la prevalenza fornite.
4. Fermare la pompa.
5. Il collegamento corretto è quello che fornisce la maggior portata e prevalenza.

4.7.2 Motori Grundfos, avviamento diretto in linea

I collegamenti per questo tipo di avviamento appaiono nella tabella seguente e in fig. 14.

Linea	Cavo/collegamento
	Motori Grundfos 4" e 6"
PE	PE (giallo/verde)
L1	U (marrone)
L2	V (nero)
L3	W (grigio)

Controllare il senso di rotazione come descritto al paragrafo *4.7.1 Controllo del senso di rotazione*.

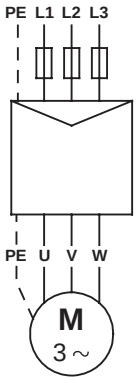

TM03 2099 3705

Fig. 14 Motori Grundfos, avviamento diretto in linea

4.7.3 Motori Grundfos, avviamento Y/Δ

I collegamenti per questo tipo di avviamento appaiono nella tabella seguente e in fig. 15.

Collegamento	Motori Grundfos 6"
PE	Giallo/verde
U1	Marrone
V1	Nero
W1	Grigio
W2	Marrone
U2	Nero
V2	Grigio

Controllare il senso di rotazione come descritto al paragrafo *4.7.1 Controllo del senso di rotazione*.

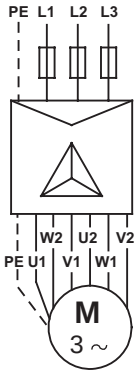

TM03 2100 3705

Fig. 15 Motori Grundfos, avviamento Y/Δ

Se non è richiesto l'avviamento Y/Δ ma diretto, il collegamento è quello in fig. 16.

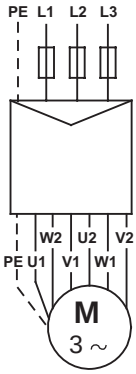

TM03 2101 3705

Fig. 16 Motori Grundfos, avviamento diretto in linea

4.7.4 Collegamento in caso di cavi elettrici non segnati

Considerando che il giusto collegamento determina la corretta rotazione, procedete come di seguito indicato:

Motori adatti ad avviamento diretto (1 cavo)

Collegare la pompa alla rete.

Poi controllare il senso di rotazione come descritto al paragrafo *4.7.1 Controllo del senso di rotazione*.

Motori adatti ad avviamento Y/Δ (2 cavi)

Le estremità degli avvolgimenti devono essere individuati con un tester e marcati di conseguenza: U1-U2, V1-V2, e W1-W2, vedere fig. 17.

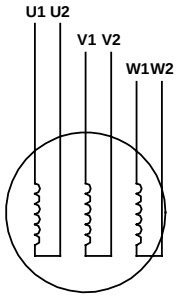

TM00 1367 5092

Fig. 17 Marcatura/collegamento del cavo non identificati – avvolgimento motori per avviamento Y/Δ

Se si vuole l'avviamento Y/Δ, collegare i conduttori come in fig. 15.

Se si vuole l'avviamento diretto, collegare i conduttori come in fig. 16.

Poi controllare il senso di rotazione come descritto al paragrafo *4.7.1 Controllo del senso di rotazione*.

4.7.5 Motori Franklin, Mercury e Pleuger

I collegamenti potranno essere effettuati come indicato nel paragrafo *4.7.4 Collegamento in caso di cavi elettrici non segnati*.

I

5. Installazione della pompa

Prima di iniziare ad operare sulla pompa o sul motore assicurarsi di aver disinserito l'alimentazione elettrica e che non possa essere reinserita accidentalmente.

5.1 Assemblaggio del motore con la pompa

Quando la pompa e il motore sono fornite come unità separate, montare il motore alla pompa come segue:

1. Maneggiare il motore utilizzando le morse adeguate alla movimentazione del motore.
2. Posizionare il motore in posizione verticale all'ingresso del pozzo, vedere fig. 18.

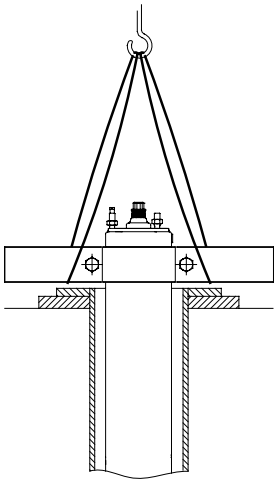

TM00 5259 2402

Fig. 18 Motore in posizione verticale

3. Sollevare la pompa utilizzando le morse, vedere fig. 19.

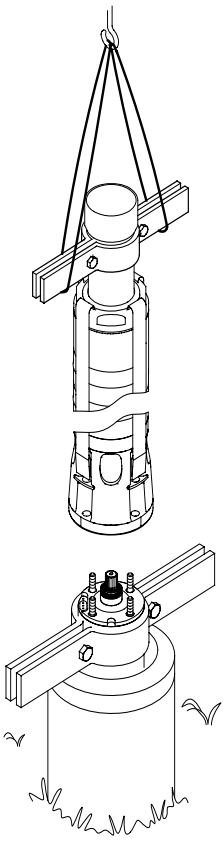

TM02 5263 2502

Fig. 19 Sollevamento della pompa in posizione

4. Posizionare la pompa sulla parte superiore del motore.
5. Avvitare i dadi, vedere tabella seguente.

I dadi che assicurano i tiranti della pompa devono essere serrati diagonalmente secondo la coppia di serraggio indicata in questa tabella:

Bulloni/ dadi dei tiranti	Coppia di serraggio [Nm]
M8	18
M10	35
M12	45
M16	120
SP 215, 50 Hz, con più di 8 stadi SP 215, 60 Hz, con più di 5 stadi	150

Nota: Accertarsi del perfetto accoppiamento albero motore-pompa.

Quando si assembla il motore con la pompa, i dadi devono essere serrati diagonalmente secondo i valori di coppia di serraggio dichiarati in questa tabella:

Diametro dei tiranti pompa/motore	Coppia di serraggio [Nm]
M8	18
M12	70
M16	150
M20	280

Nota: Assicurarsi di aver correttamente allineato le camere della pompa dopo aver completato l'assemblaggio.

5.2 Rimozione ed inserimento del copricavo

Per queste operazioni vedere da pag. 150 e 151.

Se il copricavo è avvitato sulla pompa, come per esempio nelle SP 215 o per le pompe intubate, utilizzare un cacciavite per smontarlo.

Nota: Assicurarsi di aver correttamente allineato le camere della pompa dopo aver completato l'assemblaggio.

5.3 Cablaggio del cavo sommerso

5.3.1 Motori sommersi Grundfos

Prima di cablare il cavo al motore, assicurarsi che la presa sia asciutta e pulita.

Per facilitare il cablaggio del cavo, lubrificare le parti in gomma della spina con una pasta al silicone non conduttiva.

Serrare le viti con le seguenti coppie di serraggio:

MS 402: 2,0 Nm.
MS 4000: 2,0 Nm.
MS 6000: 4,0-5,0 Nm.
MMS 6000: 10 Nm.
MMS 12000: 15 Nm.

5.4 Tubazione di mandata

Se la pompa è già accoppiata alla tubazione di mandata e si usa una chiave a catena per tubi, la pompa dovrà essere stretta solo afferrandola per la bocca di mandata.

I tubi filettati dovranno essere collegati in modo da evitare che si svitino a causa della reazione dovuta all'avviamento/arresto della pompa.

La filettatura del tubo che si avvita alla pompa non deve essere più lunga del filetto della pompa.

Per evitare trasmissione di rumore all'edificio è utile l'impiego di tubi in plastica.

Nota: I tubi in plastica sono consigliati solo per pompe da 4".

Quando si utilizzano tubi in plastica, assicurare la pompa con una fune non in tensione collegata alla bocca di mandata, come in fig. 20.

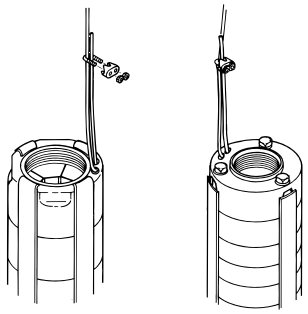

Fig. 20 Fissaggio del cavo del filtro

Per collegare il tubo di plastica alla pompa, usare un giunto a compressione di tipo conico.

Per tubi flangiati si dovranno prevedere delle cavità che ricevono il cavo elettrico ed il tubetto di plastica per indicare il livello dell'acqua.

5.5 Massima profondità d'installazione al di sotto del pelo libero

Grundfos MS 402: 150 m.
Grundfos MS 4000: 600 m.
Grundfos MS 6000: 600 m.
Grundfos MMS: 250 m.
Motori Franklin: 350 m.
Motori Mercury: 350 m.
Motori Pleuger: 350 m.

5.6 Fissaggio del cavo

Per fissare il cavo sulla fune di sostegno o sulla tubazione di mandata bisogna usare delle fascette da posizionare ogni 3 metri.

Grundfos può fornire un set di fascette di 1,5 mm di spessore e 16 bottoni.

Sistemazione cavo: Togliere il nastro in gomma in modo che la parte senza asola sia la più lunga possibile.
Avvolgere la fascetta una volta sul cavo e sulla fune disponendo le parti come in fig. 21.

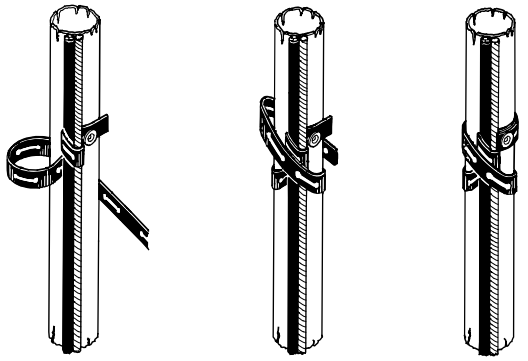

Fig. 21 Montaggio dei fascette

Avvolgere poi il tutto una o più volte attorno al tubo fermando la fascetta con asola e bottone.
Avvolgere poi almeno due volte e strettamente al tubo, il cavo e la fune.
Tagliare la parte eccedente della fascetta.

Con cavi di grossa dimensione avvolgere più volte.

Nel caso che il tubo sia di plastica, bisogna lasciare il cavo elettrico e la fune di sostegno non in tensione onde evitare che l'allungamento del tubo, dovuto al peso dell'acqua in esso contenuto, strappi il cavo elettrico.

Con tubi flangiati le fascette devono essere applicate prima e dopo le flange.

5.7 Inserimento della pompa nel pozzo

Si raccomanda di verificare che il pozzo non abbia variazioni di diametro che possano ostacolare l'installazione.

Calare la pompa nel pozzo evitando di danneggiare il cavo.

Nota: Non utilizzare il cavo elettrico per calare la pompa.

5.8 Profondità di installazione

Il livello dinamico nel pozzo deve garantire la copertura dell'interconnettore della pompa. Vedere paragrafo *3.2 Limiti di posizionamento* e fig. 22.

La minima pressione all'aspirazione è indicata nelle curve dell'NPSH per la specifica pompa.
Il margine minimo di sicurezza deve essere di 1 metro.

Si raccomanda di installare la pompa al di sopra del filtro del pozzo per garantire un miglior raffreddamento del motore, paragrafo *3.4 Temperatura del liquido / raffreddamento*.

Bloccare il tubo di mandata con apposite staffe sulla testa del pozzo.

Allentare la fune di sostegno ed assicuratela alla fondazione.

Nota: In caso di tubo di plastica evidenziamo l'allungamento dello stesso durante il funzionamento.

I

6. Avviamento e funzionamento

6.1 Avviamento

Una volta installata, la pompa si può avviare con valvola di mandata chiusa di 1/3.

Controllare il senso di rotazione come descritto al paragrafo *4.7.1 Controllo del senso di rotazione*.

Se ci sono impurità nell'acqua bisognerà aprire gradualmente la valvola fino a che l'acqua comincerà a schiarirsi. La pompa non deve essere fermata prima che l'acqua sia tornata completamente pulita, perchè altrimenti le varie parti della pompa e la valvola di non ritorno potrebbero rovinarsi.

Verificate che il livello del pozzo lasci la pompa sempre sommersa. In particolare che l'interconnettore non sia scoperto, vedere paragrafo *3.2 Limiti di posizionamento* e fig. 22.

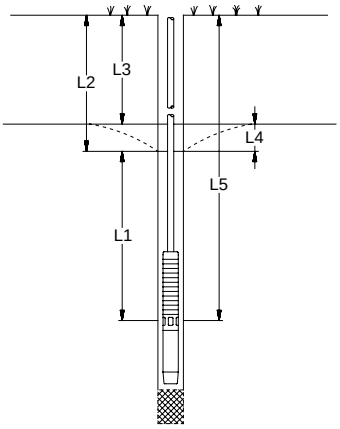

Fig. 22 Confronto dei diversi livelli dell'acqua

L1: Profondità minima di installazione sotto il livello dinamico. E' raccomandato al minimo 1 mt.
L2: Livello dinamico dell'acqua.
L3: Livello statico dell'acqua.
L4: Abbassamento. E' la differenza fra lo statico e il dinamico.
L5: Profondità di installazione.

Se la portata della pompa è superiore a quella del pozzo, raccomandiamo l'uso del MP 204 che protegge contro la marcia a secco.

In assenza di ogni protezione contro la marcia a secco, il livello scenderà fino all'interconnettore e la pompa aspirerà aria.

Nota: Ciò provoca danni per insufficiente raffreddamento e lubrificazione.

6.2 Funzionamento

6.2.1 Portata minima

Per garantire il raffreddamento richiesto del motore, la pompa deve funzionare con valori di portata non inferiori a quelli minimi indicati al paragrafo *3.4 Temperatura del liquido / raffreddamento*.

6.2.2 Frequenza di avviamenti e arresti

Tipo di motore	Numero di avviamenti
MS 402	Se ne raccomanda almeno 1 all'anno. Massimo 100 all'ora. Massimo 300 al giorno.
MS 4000	Se ne raccomanda almeno 1 all'anno. Massimo 100 all'ora. Massimo 300 al giorno.
MS 6000	Se ne raccomanda almeno 1 all'anno. Massimo 30 all'ora. Massimo 300 al giorno.
MMS 6000	Se ne raccomanda almeno 1 all'anno. Massimo 15 all'ora. Massimo 360 al giorno.
MMS 8000	Se ne raccomanda almeno 1 all'anno. Massimo 10 all'ora. Massimo 240 al giorno.
MMS 10000	Se ne raccomanda almeno 1 all'anno. Massimo 8 all'ora. Massimo 190 al giorno.
MMS 12000	Se ne raccomanda almeno 1 all'anno. Massimo 5 all'ora. Massimo 120 al giorno.
Franklin	Se ne raccomanda almeno 1 all'anno. Massimo 100 al giorno.
Mercury 6"	Se ne raccomanda almeno 1 all'anno. Massimo 20 all'ora.
Mercury 8"	Se ne raccomanda almeno 1 all'anno. Massimo 15 all'ora.
Mercury 10"	Se ne raccomanda almeno 1 all'anno. Massimo 10 all'ora.
Mercury 12"	Se ne raccomanda almeno 1 all'anno. Massimo 6 all'ora.
Pleuger	Se ne raccomanda almeno 1 all'anno. Massimo 100 al giorno.

I

7. Manutenzione e assistenza

Le pompe non richiedono particolari manutenzioni.

Utilizzare i Service Kits e gli attrezzi speciali Grundfos per pompe SP.

L'assistenza è bene sia eseguita presso i Centri Assistenza Grundfos.

Se la pompa è stata utillizzata con liquidi nocivi o tossici, sarà classificata come contaminata.

Prima di usufruire dell'assistenza Grundfos, contattare la società fornendo i dettagli circa il liquido pompato e solo successivamente spedire la pompa all'assistenza. In caso contrario, Grundfos può rifiutarsi di accettare la pompa e addebitare al cliente eventuali costi di trasporto.

8. Tabella ricerca guasti

Guasto	Causa	Rimedio
1. La pompa non funziona.	a) I fusibili sono bruciati.	Sostituirli. Se si ripete controllare cavo e motore.
	b) L'interruttore automatico è intervenuto.	Ripristinarlo.
	c) Non c'è tensione in linea.	Contattare il fornitore di energia.
	d) L'interruttore termico è intervenuto.	Ripristinarlo. Se si ripete controllare la tensione.
	e) Contattore in avaria.	Sostituirlo.
	f) Componenti del quadro in avaria.	Riparare o sostituire.
	g) Il circuito di controllo è interrotto o in avaria.	Controllarlo.
	h) E' intervenuta la protezione contro la marcia a secco.	Controllare il livello. Se è corretto controllare gli elettrodi e il relè.
	i) La pompa o il cavo sono danneggiati.	Riparare/sostituire pompa/cavo.
2. La pompa gira ma non eroga acqua.	a) Valvola di mandata chiusa.	Aprire la valvola.
	b) Non c'è acqua nel pozzo o il livello è troppo basso.	Vedere 3 a).
	c) La valvola di non ritorno è bloccata in posizione chiusa.	Estrarre la pompa, pulire o sostituire la valvola.
	d) La griglia di aspirazione è intasata.	Estrarre la pompa e pulirla.
	e) La pompa è in avaria.	Riparare/sostituire la pompa.
3. La pompa eroga poca portata.	a) Abbassamento livello dinamico maggiore del previsto.	Aumentare la profondità di installazione, ridurre la portata agendo sulla valvola, sostituire la pompa con una più piccola.
	b) Senso di rotazione motore errato.	Vedere paragrafo *4.7.1 Controllo del senso di rotazione*.
	c) Le valvole sul tubo di mandata sono poco aperte o intasate.	Controllare, aprire e pulire.
	d) Il tubo di mandata è intasato (terra/limo).	Ripulire o sostituire.
	e) La valvola di non ritorno della pompa è ostruita.	Sollevare la pompa e pulire la valvola.
	f) La pompa e il tubo sono intasati.	Estrarre la pompa e ripulire il tutto.
	g) La pompa è danneggiata.	Riparare/sostituire.
	h) Perdita nel tubo.	Riparare/sostituire.
	i) Il tratto verticale del tubo è danneggiato.	Riparare/sostituire.
4. Marcia/arresto troppo frequenti.	a) Differenziale del pressostato troppo basso.	Aumentare il differenziale. La pressione di stop non deve superare la pressione nominale del serbatoio autoclave.
	b) Gli elettrodi del relè di livello non sono stati installati correttamente nel serbatoio di accumulo.	Regolare la distanza tra gli elettrodi per assicurare un buon intervallo fra avviamento/arresto. Se ciò non servisse, si può agire riducendo l'apertura della valvola sulla mandata.
	c) La valvola di non ritorno perde o rimane semiaperta.	Estrarre la pompa e riparate la valvola.
	d) Il volume d'aria in autoclave è scarso.	Pressurizzare secondo le istruzioni dell'autoclave o del serbatoio a membrana.
	e) Serbatoio autoclave troppo piccolo.	Aumentare la capacità aggiungendo altri serbatoi o sostituirlo con uno più grande.
	f) La membrana del serbatoio è danneggiata.	Controllare la membrana.

I

9. Tabella ricerca guasti motore e cavo

1. Tensione di alimentazione 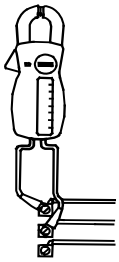 TM00 1371 5092	Misurare le tensioni fra le fasi con un voltmetro. Nel monofase misurare la tensione fra fase e neutro o fase/fase. Collegare il voltmetro ai morsetti del quadro elettrico.	La tensione, con motore in marcia, dovrà essere come indicato nel paragrafo *4.1 Generalità*. Il motore si può bruciare con variazioni superiori. In questo caso la linea è insufficiente e la pompa deve essere fermata.
2. Consumo di corrente 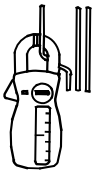 TM00 1372 5092	Misurare l'intensità di corrente su ogni fase con un valore di pressione stabile (possibilmente al massimo carico). Il valore di corrente max. è indicato in targhetta.	Lo squilibrio di corrente fra le fasi non deve superare il 5%. In caso di eccessivo assorbimento si possono verificare i seguenti casi: • Bruciatura dei contatti in caso di alimentazione monofase. Sostituire il motoavviatore o sostituire i contatti. • Indebolimento dei collegamenti nelle giunzioni. Vedere punto 3. • Tensione di linea troppo alta o troppo bassa. Vedere punto 1. • Gli avvolgimenti del motore sono in corto. Vedere punto 3. • La pompa è danneggiata e il motore è in sovraccarico. Estrarre la pompa e controllare. • I valori di resistenza delle fasi (motore trifase) sono squilibrati. Vedere punto 3.
Punti 3 e 4. La misura non è necessaria quando tensione e corrente sono normali.		
3. Resistenza degli avvolgimenti 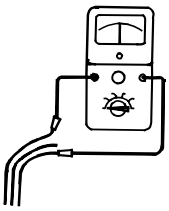 TM00 1373 5092	Scollegare il cavo sommerso dal quadro. Misurare la resistenza dei conduttori.	Per motore trifase la differenza massima non deve superare il 10%. Per differenze maggiori controllare separatamente motore e cavo sostituendo la parte difettosa. **Nota:** Nei motori monofase a 3-fili, l'avvolgimento di marcia ha il valore più basso.
4. Resistenza di isolamento 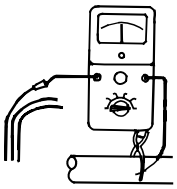 TM00 1374 5092	Scollegare il cavo sommerso dal quadro elettrico. Misurare l'isolamento fra ogni fase e terra. Accertarsi che il collegamento di terra sia appropriato.	L'isolamento deve essere maggiore o uguale a 0,5 MΩ. Al contrario controllare motore e cavo separatamente e sostituire la parte difettosa. Regolamenti locali potrebbero fissare valori diversi di resistenza d'isolamento.

10. Smaltimento

Lo smaltimento di questo prodotto o di parte di esso deve essere effettuato in modo consono:

1. Usare i sistemi locali, pubblici o privati, di raccolta dei rifiuti.
2. Nel caso in cui non fosse possibile, contattare Grundfos o l'officina di assistenza autorizzata più vicina.

Soggetto a modifiche.

CONTENIDO

Leer estas instrucciones de instalación y funcionamiento antes de realizar la instalación. La instalación y el funcionamiento deben cumplir con las normativas locales en vigor.

Estas instrucciones se aplican a los motores sumergibles Grundfos, tipos MS y MMS, y a las bombas sumergibles Grundfos, tipo SP, provistas de motores sumergibles, tipos Grundfos MS o MMS, Franklin 4"-8", Mercury 6"-12" y Pleuger 6"-12".

Si las bombas llevan motores distintos a Grundfos MS o MMS, tenga en cuenta que los datos del motor pueden diferir de los datos indicados en estas instrucciones.

1. Suministro y almacenamiento

1.1 Suministro

Las bombas sumergibles Grundfos se suministran desde fábrica en un embalaje adecuado en el que permanecerán hasta que se instalen.

Durante el desembalaje y antes de la instalación, debe tener cuidado cuando maneje la bomba de no causar desalineación debido a la inclinación.

Nota: Las bombas deben permanecer en el embalaje hasta que se coloquen en posición vertical durante la instalación.
Cuando el cuerpo hidráulico y el motor se suministran como unidades separadas (bombas largas), montar el motor a la bomba como se indica en sección *5.1 Montaje del motor a la bomba*.

Nota: La placa de datos que se suministra suelta con la bomba debe ser fijada cerca del lugar de instalación.

La bomba no debe sufrir golpes ni sacudidas innecesarias.

1.2 Almacenaje y manipulación

Temperatura de almacenaje

Bomba: –20°C a +60°C.
Motor: –20°C a +70°C.

Los motores deben guardarse en un lugar cerrado, seco y bien ventilado.

Nota: Si se almacenan los motores MMS durante más de un año, hay que girar el eje a mano por lo menos una vez al mes.
Si el motor ha estado almacenado durante más de un año antes de la instalación, las piezas giratorias del motor deben ser desmontadas y verificadas antes de su utilización.

La bomba no debe estar expuesta a la luz directa del sol.

Si la bomba ha sido desembalada, debe guardarse en posición horizontal, sujetada adecuadamente, o en posición vertical para evitar desalineación. Comprobar que la bomba no pueda rodar ni caer. Durante el almacenaje, la bomba puede estar sujetada como indica la fig. 1.

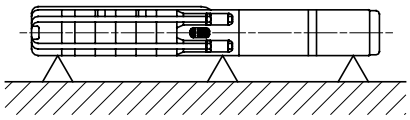

Fig. 1 Posición de la bomba durante el almacenamiento

1.2.1 Protección contra heladas

Si la bomba tiene que estar almacenada después de usarse, debe hacerse en un local protegido contra heladas, o debe asegurarse de que el líquido del motor sea anticongelante.

2. Información general

2.1 Aplicaciones

Las bombas sumergibles Grundfos, tipo SP, están diseñadas para una amplia gama de aplicaciones de suministro de agua y distribución de líquidos, tales como suministro de agua potable a casas particulares, instalaciones de abastecimiento de agua, suministro de agua a viveros, jardines o cultivos, agua subterránea y grupos de presión, y varias aplicaciones industriales.

Instalar las bombas con el interconector de aspiración por debajo del nivel del agua; pueden ser instaladas tanto horizontal como verticalmente, ver también sección *3.2 Requisitos de colocación*.

2.2 Líquidos bombeados

Líquidos limpios, poco densos y **no explosivos** sin partículas sólidas ni fibras.

El máximo contenido de arena en el agua no debe exceder los 50 g/m^3. Un mayor contenido de arena reducirá la vida de la bomba e incrementará el riesgo de bloqueo.

Nota: Cuando se bombean líquidos con una densidad mayor que la del agua, deben utilizarse motores con un rendimiento correspon-dientemente mayor.

Si se ha de bombear líquidos con una viscosidad mayor que la del agua, contactar con Grundfos.

Los modelos especiales SP A N, SP A R, SP N, SP R y SPE están diseñados para líquidos con mayor agresividad que el agua potable.

La máxima temperatura del líquido aparece en sección *3.4 Temperatura del líquido/refrigeración*.

E

2.3 Nivel de ruido

El nivel de ruido se ha medido de acuerdo con las reglas establecidas en la directiva sobre maquinaria de la CE 98/37/CE.

Nivel de ruido de las bombas

Se refiere a bombas sumergidas en el agua, sin válvulas de regulación externas.

Tipo de bomba	$\overline{L}_{pA}$ [dB(A)]
SP 1A	<70
SP 2A	<70
SP 3A	<70
SP 5A	<70
SP 8A	<70
SP 14A	<70
SP 17	<70
SP 30	<70
SP 46	<70
SP 60	<70
SP 77	<70
SP 95	<70
SP 125	79
SP 160	79
SP 215	82

Nivel de ruido de los motores

El nivel de ruido de los motores Grundfos MS y MMS es inferior a 70 dB(A).

Otras marcas de motores: Ver instrucciones de instalación y funcionamiento para esos motores.

E

3. Preparación

Antes de empezar a trabajar en la bomba asegúrese de que el suministro eléctrico está desconectado y que no puede conectarse accidentalmente.

3.1 Comprobación del líquido del motor

Los motores sumergibles vienen de fábrica rellenos de un líquido especial no tóxico, anticongelante hasta –20°C.

Nota: El nivel del líquido del motor debe ser comprobado y el motor debe rellenarse si es necesario.

Nota: Si hay riesgo de helada, debe utilizarse líquido especial Grundfos para rellenar el motor. Por otra parte, puede utilizarse agua limpia para rellenar (sin embargo, **no** utilizar **nunca** agua destilada).

Rellenar de líquido como se describe abajo.

3.1.1 Motores sumergibles Grundfos tipos MS 4000 y MS 402

El orificio de llenado para el líquido del motor está situado en las siguientes posiciones:

MS 4000: En el punto más alto del motor.

MS 402: En el fondo del motor.

1. Colocar la bomba sumergible como muestra la fig. 2. El tornillo de llenado debe estar en el punto más alto del motor.
2. Quitar el tornillo del orificio de llenado.
3. Inyectar líquido en el motor con una jeringuilla de llenado, fig. 2, hasta que el líquido vuelva a salir por el orificio de llenado.
4. Volver a colocar el tornillo en el orificio de llenado y apretarlo fuertemente antes de cambiar de posición la bomba.

Par de torsión:

MS 4000: 3,0 Nm.

MS 402: 2,0 Nm.

La bomba sumergible está ahora lista para ser instalada.

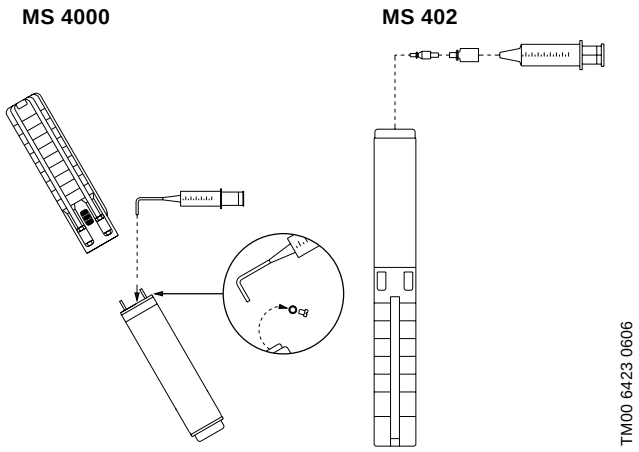

Fig. 2 Posición de la bomba durante el llenado – MS 4000 y MS 402

3.1.2 Motores sumergibles Grundfos tipo MS 6000

- Si se suministra el motor desde un almacén hay que comprobar el nivel del líquido antes de montar el motor en la bomba, ver fig. 3.
- El nivel del líquido de bombas suministradas directamente por Grundfos ya ha sido comprobado.
- En el caso de reparación hay que comprobar el nivel del líquido, ver fig. 3.

Procedimiento de llenado:

El orificio de llenado para el líquido del motor está situado en la parte superior del motor.

1. Colocar la bomba sumergible como muestra la fig. 3. El tornillo de llenado debe estar en el punto más alto del motor.
2. Quitar el tornillo del orificio de llenado.
3. Inyectar líquido en el motor con una jeringuilla de llenado, fig. 3, hasta que el líquido vuelva a salir por el orificio de llenado.
4. Volver a colocar el tornillo en el orificio de llenado y apretarlo fuertemente antes de cambiar de posición la bomba.

Par de torsión: 3,0 Nm.

La bomba sumergible está ahora lista para ser instalada.

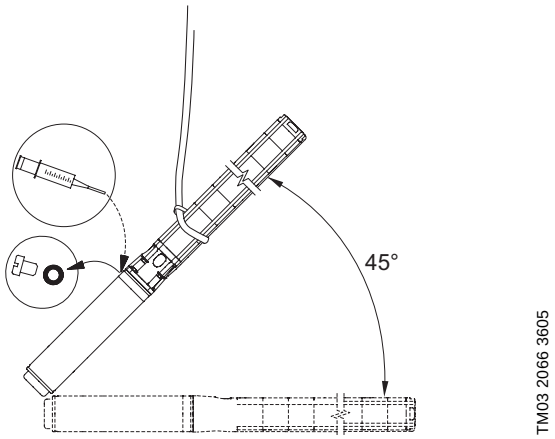

Fig. 3 Posición de la bomba durante el llenado – MS 6000

3.1.3 Motores sumergibles Grundfos tipos MMS 6000, MMS 8000, MMS 10000 y MMS 12000

Procedimiento de llenado:

1. Colocar el motor en un ángulo de 45° con el punto más alto del motor hacia arriba, ver fig. 4.
2. Quitar el tapón A y colocar un embudo en el orificio.
3. Echar agua de grifo en el motor hasta que el líquido dentro del motor rebose por A.
   Nota: No utilizar líquido de motor ya que contiene aceite.
4. Quitar el embudo y volver a colocar el tapón A.

Nota: Antes de montar el motor a la bomba después de un periodo largo de almacenamiento, lubricar el cierre echando unas gotas de agua y girando el eje.

La bomba sumergible está ahora lista para ser instalada.

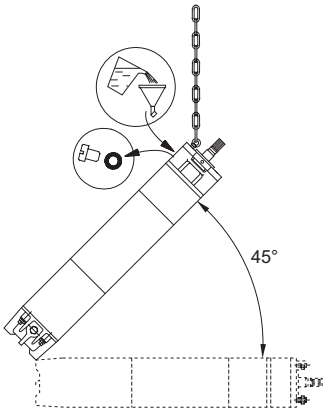

TM03 2065 3605

Fig. 4 Posición del motor durante el llenado – MMS

3.1.4 Motores sumergibles Franklin a partir de 3 kW

El nivel del líquido del motor de los motores sumergibles Franklin de 4" y 6" se comprueba midiendo la distancia desde la placa inferior hasta el diafragma de caucho incorporado. Esta distancia puede medirse insertando una regla o una varilla a través del orificio hasta que toque al diafragma, fig. 5.
Nota: Tenga cuidado de no dañar el diafragma.

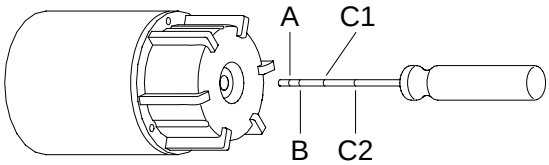

TM00 1353 5092

Fig. 5 Medición de la distancia desde el fondo hasta el diafragma

La siguiente tabla muestra la distancia correcta desde el extremo de la placa inferior hasta el diafragma:

Motor	Dimensión	Distancia
Franklin 4", 0,25 a 3 kW (ver fig. 6a)	A	8 mm
Franklin 4", 3 a 7,5 kW (ver fig. 6b)	B	16 mm
Franklin 6", 4 a 45 kW (ver fig. 6c)	C1	35 mm
Franklin 6", 4 a 22 kW (ver fig. 6d)	C2	59 mm

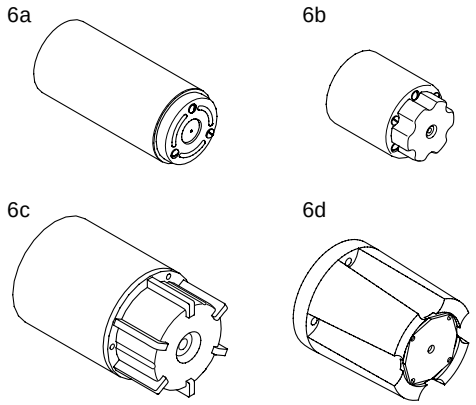

TM00 6422 3695

Fig. 6 Motores sumergibles Franklin

Si la distancia no es correcta, realizar un ajuste como se describe en sección *3.1.5 Motores sumergibles Franklin*.

3.1.5 Motores sumergibles Franklin

El nivel del líquido del motor en los motores sumergibles Franklin de 8" se comprueba de la siguiente manera:

1. Sacar con palanca el filtro enfrente de la válvula de la parte superior del motor utilizando un destornillador. Si el filtro está encajado, desatornillarlo. La posición de la válvula de llenado se muestra en la fig. 7.
2. Presionar la jeringuilla de llenado contra la válvula e inyectar el líquido, fig. 7. Si el cono de la válvula se aprieta demasiado, puede dañarse ocasionando escapes de agua en la válvula.
3. Quitar el aire del motor presionando la punta de la jeringuilla de llenado ligeramente contra la válvula.
4. Repetir los procesos de inyectar líquido y liberar aire hasta que el líquido fluya o hasta que el diafragma esté en su posición correcta (Franklin 4" y 6").
5. Volver a colocar el filtro después de haber rellenado con líquido.

La bomba sumergible está ahora lista para ser instalada.

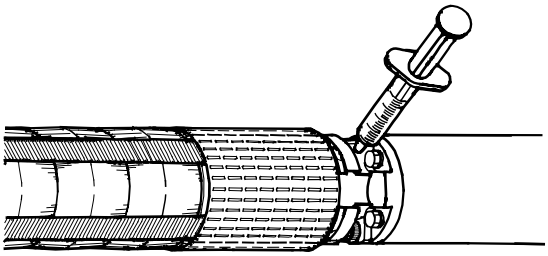

TM00 1354 5092

Fig. 7 Posición de la válvula de llenado

3.1.6 Motores sumergibles Mercury

El nivel de líquido en el motor se comprueba como se describe para los motores Franklin de 8", ver sección *3.1.5 Motores sumergibles Franklin*.

3.1.7 Motores sumergibles Pleuger

El nivel de líquido en el motor se comprueba como se describe para los motores Franklin de 8", ver sección *3.1.5 Motores sumergibles Franklin*.

3.2 Requisitos de colocación

Si la bomba tiene que instalarse en un sitio donde sea accesible, el acoplamiento debe estar adecuadamente aislado del contacto de las personas. Se puede por ejemplo encamisarla.

Dependiendo del tipo de motor, la bomba puede instalarse vertical u horizontalmente. La sección *3.2.1* muestra una lista completa de tipos de motores aptos para instalación horizontal.

Si se instala horizontalmente, la conexión de descarga **nunca debe** estar por debajo del plano horizontal, ver fig. 8.

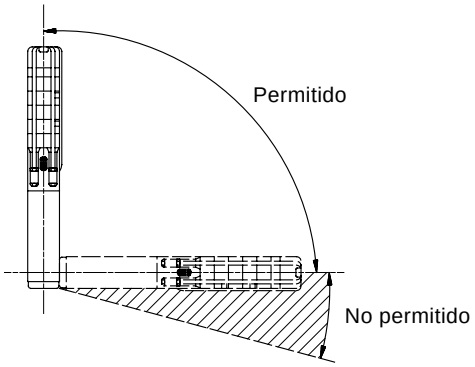

TM00 1355 5092

Fig. 8 Requisitos de colocación

Si se instala la bomba horizontalmente, por ejemplo en un tanque, se recomienda montarla en una camisa de refrigeración.

E

3.2.1 Motores adecuados para instalación horizontal

Tipo de motor	Potencia nominal 50 Hz	Potencia nominal 60 Hz
	[kW]	[kW]
MS	Todos los tamaños	Todos los tamaños
MMS 6000	3,7 a 18,5	3,7 a 18,5
MMS 8000	22,0 a 63,0	22,0 a 63,0
MMS 10000	75,0 a 110,0	75,0 a 110,0
MMS 12000	147,0 a 190,0	–

Cuando los motores sumergibles Franklin de 4" hasta 2,2 kW incluidos se arrancan más de 10 veces al día, se recomienda inclinar el motor por lo menos 15º por encima del plano horizontal para reducir al mínimo el desgaste del disco de empuje superior.

Nota: Durante el funcionamiento, el interconector de aspiración de la bomba debe estar siempre completamente sumergido en el líquido.

Si se utiliza la bomba para bombear líquidos calientes (40º a 60ºC), tener cuidado para que nadie entre en contacto con la bomba y la instalación, instalando p.ej. un protector.

3.3 Diámetro de la bomba/motor

El máximo diámetro de la bomba/motor está indicado en las tablas de las pág. 146 y 147.

Se recomienda comprobar el pozo con un calibrador interior para asegurar un paso no obstruido.

3.4 Temperatura del líquido/refrigeración

La máxima temperatura del líquido y la mínima velocidad del líquido sobre el motor aparecen en la siguiente tabla.

Se recomienda instalar el motor por encima del filtro del pozo para conseguir una óptima refrigeración.

Nota: En los casos en que no se pueda alcanzar la velocidad indicada del líquido, debe instalarse una camisa.

Si hay riesgo de producirse sedimentos, tales como arena, alrededor del motor, debe utilizarse una camisa para asegurar una adecuada refrigeración del motor.

3.4.1 Máxima temperatura del líquido

Teniendo en cuenta las piezas de caucho de la bomba y del motor, la temperatura del líquido no debe superar los 40ºC (~105ºF). Ver también la siguiente tabla.

La bomba puede funcionar a una temperatura del líquido entre los 40ºC y los 60ºC (~105ºF a 140ºF), siempre que las piezas de caucho se sustituyan cada tres años.

Motor	Instalación		
	Flujo alrededor del motor	Vertical	Horizontal
Grundfos MS y MMS	**Convección libre 0 m/s**	20°C (~68°F)	Se recomienda camisa
Grundfos MS	**0,15 m/s**	40°C (~105°F)	40°C (~105°F)
Grundfos MS I *	**0,15 m/s**	60°C (~140°F) Se recomienda camisa	60°C (~140°F) Se recomienda camisa
Grundfos MMS	**0,15 m/s**	25°C (~77°F)	25°C (~77°F)
Franklin 4"	**0,08 m/s**	30°C (~85°F)	30°C (~85°F)
Franklin 6" y 8"	**0,16 m/s**	30°C (~85°F)	30°C (~85°F)
Mercury	**0,15 m/s**	25°C (~77°F)	25°C (~77°F)
Pleuger	**0,5 m/s**	30°C (~86°F)	30°C (~86°F)

* A una presión ambiente de mín. 1 bar (1 MPa)

Nota: Por convección libre se entiende que el diámetro del pozo es al menos 2" mayor que el del motor sumergible.

Otras marcas de motores: Ver especificaciones del motor.

3.5 Conexión de la tubería

Si puede transmitirse ruido al edificio a través de la tubería, es aconsejable utilizar tuberías de plástico.

Nota: Las tuberías de plástico están recomendadas solamente para bombas de 4".

Cuando se utilicen tuberías de plástico, la bomba debe sujetarse mediante un cable de suspensión.

Asegúrese de que las tuberías de plástico que van a utilizarse son adecuadas para la temperatura del líquido y presión de la bomba en concreto.

Cuando se conectan tuberías de plástico, se debe utilizar un acoplamiento de compresión entre la bomba y la primera sección de la tubería.

4. Conexiones eléctricas

Antes de empezar a trabajar en la bomba asegúrese de que el suministro eléctrico está desconectado y que no puede conectarse accidentalmente.

4.1 General

La conexión eléctrica debe realizarla un electricista autorizado de acuerdo con las normativas locales.

La tensión de alimentación, la intensidad nominal máxima y el cos φ aparecen en la placa de datos suelta que **debe** colocarse cerca del lugar de instalación.

El tipo de tensión para los motores sumergibles Grundfos **MS** y **MMS**, medida en los terminales del motor, puede ser –10%/+6% de la tensión nominal durante el funcionamiento contínuo (incluyendo variación en la tensión de alimentación y pérdidas en los cables).

Además, debe comprobarse que hay simetría de tensión en las líneas de suministro eléctrico, es decir, la misma diferencia de tensión entre las fases individuales, ver también sección *9. Comprobación de motor y cable*, punto 2.

La bomba debe conectarse a tierra.

La bomba debe conectarse a un interruptor externo con una separación mínima de contacto de 3 mm en todos los polos.

Si los motores Grundfos MS con un transmisor de temperatura (Tempcon) integrado no se instalan junto con un MP 204 o protección de motor Grundfos similar, éstos deben conectarse a un condensador de 0,47 µF homologado para funcionamiento fase-fase (IEC 384-14) para cumplir con la directiva EC EMC (89/336/EEC). El condensador debe conectarse a las dos fases a las cuales el transmisor de temperatura está conectado, ver fig. 9.

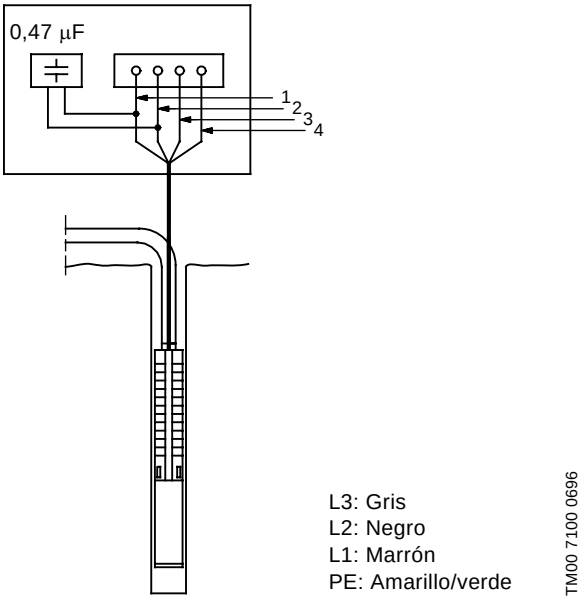

Fig. 9 Conexión del condensador

Los motores están bobinados para arranque directo o arranque estrella-triángulo, y la corriente de arranque es entre 4 y 6 veces el motor a plena carga.

El tiempo de arranque de la bomba es solo de 0,1 segundo aproximadamente. El arranque directo es, por tanto, normalmente aprobado por las autoridades de suministro eléctrico.

4.1.1 Funcionamiento con convertidor de frecuencia

Motores Grundfos

Los motores Grundfos trifásicos pueden conectarse a un convertidor de frecuencia.

Nota: Si un motor Grundfos MS con transmisor de temperatura se conecta a un convertidor de frecuencia, un fusible incorporado en el transmisor se fundirá y el transmisor quedará inactivo. El transmisor no puede ser reactivado. Esto significa que el motor funcionará como un motor sin transmisor de temperatura.

Si se requiere un transmisor de temperatura se puede pedir a Grundfos un sensor Pt100 para ser montado en el motor sumergible.

Durante el funcionamiento con convertidor de frecuencia, no es aconsejable que el motor gire a una frecuencia superior a la frecuencia nominal (50 ó 60 Hz). Respecto al funcionamiento de la bomba, es importante que nunca se reduzca la frecuencia (y consecuentemente la velocidad) a tal nivel que no se pueda asegurar el caudal necesario del líquido de refrigeración alrededor del motor.

Para evitar daños en el cuerpo hidráulico, debe asegurarse de que el motor pare cuando el caudal de la bomba descienda por debajo de 0,1 x caudal nominal.

Dependiendo del tipo de convertidor de frecuencia, el motor puede estar expuesto a picos de tensión perjudiciales.

Para tensiones de alimentación de hasta 440 V inclusive, los motores MS 402 (ver placa de motor) deben estar protegidos contra picos de tensión superiores a 650 V (valor máximo) entre los terminales de suministro.

Se recomienda proteger otros tipos de motores contra picos de tensión superiores a 850 V.

Las perturbaciones mencionadas pueden disminuirse mediante la instalación de un **filtro RC** entre el convertidor de frecuencia y el motor.

El posible incremento de ruido del motor puede reducirse instalando un **filtro LC** que también elimina los picos de tensión del convertidor de frecuencia.

Para mayor información, contacte con el proveedor de su convertidor de frecuencia o con Grundfos.

Otras marcas de motores distintas a Grundfos

Contactar con Grundfos o con el fabricante del motor.

4.2 Protección del motor

4.2.1 Motores monofásicos

Los motores sumergibles monofásicos tipo MS 402 incorporan un interruptor térmico y no necesitan protección adicional del motor.

Cuando el motor se ha desconectado térmicamente, los terminales del motor todavía tienen corriente. Cuando el motor se haya enfriado lo suficiente, arrancará automáticamente.

Los motores sumergibles monofásicos tipo MS 4000 deben estar protegidos. El dispositivo de protección puede ir en una caja de control o separado.

Los motores Franklin 4" PSC deben estar conectados a un arrancador de motor.

4.2.2 Motores trifásicos

Los motores Grundfos **MS** están disponibles con o sin transmisor de temperatura incorporado.

Los motores **con** un transmisor de temperatura operativo incorporado deben protegerse por medio de:

- un arrancador de motor con relé térmico o
- un MTP 75 y un arrancador de motor con relé térmico o
- un MP 204 y contactor(es).

Los motores **sin** transmisor de temperatura o **con** un transmisor de temperatura **no** operativo deben protegerse por medio de:

- un arrancador de motor con relé térmico o
- un MP 204 y contactor(es).

Los motores Grundfos **MMS** no llevan sensor de temperatura. Un sensor Pt100 está disponible como accesorio.

Los motores **con** un Pt100 deben estar protegidos mediante:

- un arrancador con relé térmico o
- un MP 204 y contactor(es).

Los motores **sin** un sensor Pt100 deben estar protegidos mediante:

- un arrancador con relé térmico o
- un MP 204 y contactor(es).

4.2.3 Ajustes necesarios del arrancador de motor

En motores fríos, el tiempo de disparo del arrancador debe ser inferior a 10 segundos con una intensidad 5 veces la máxima nominal del motor.

Nota: Si no se cumple este requisito, la garantía del motor quedará anulada.

Para garantizar la protección óptima del motor sumergible, la protección de arranque debe ajustarse según lo siguiente:

1. Ajustar la protección de arranque a la intensidad nominal máxima del motor.
2. Arrancar la bomba y dejar funcionar durante media hora a rendimiento normal.
3. Bajar gradualmente el indicador de la escala hasta llegar al punto de disparo del motor.

E

4. Aumentar el ajuste de la sobrecarga en un 5%.

El ajuste máximo permitido es la intensidad nominal máxima del motor.

Para los motores que están bobinados para arranque estrella-triángulo, la sobrecarga del arrancador debe ajustarse como se indica arriba, pero el ajuste máximo debe ser como sigue:

Ajuste de la sobrecarga del arrancador = intensidad nominal máxima x 0,58.

El máximo tiempo de puesta en marcha permitido para arranque estrella-triángulo y arranque con autotransformador es de 2 segundos.

4.3 Protección contra rayos

La instalación puede estar provista de un dispositivo de protección especial de sobrevoltaje para proteger al motor contra sobretensiones en las líneas de suministro eléctrico cuando los rayos caen sobre algún lugar de la zona, ver fig. 10.

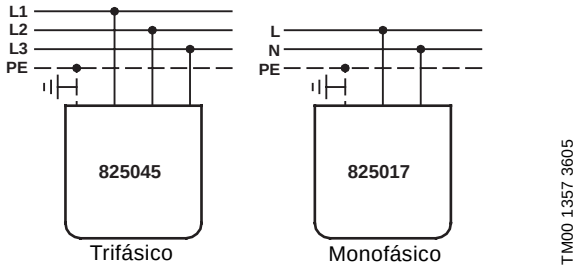

Fig. 10 Montaje de un dispositivo de protección contra sobrevoltaje

La protección contra sobrevoltaje, sin embargo, no protegerá al motor contra la caída directa de un rayo.

La protección contra sobrevoltaje debe estar conectada a la instalación tan cerca como sea posible del motor, y siempre de acuerdo con las normativas locales.
Consulte a Grundfos por los dispositivos de protección contra rayos.

Los motores tipo MS 402, sin embargo, no necesitan protección adicional contra rayos ya que están muy bien aislados.

Pedir un Kit especial de terminación de cable con un dispositivo de protección contra sobrevoltaje incorporado para motores sumergibles Grundfos de 4" (pieza nº.: 799911 / 799912).

4.4 Dimensionamiento del cable

Asegurarse de que el cable de inmersión puede resistir la sumersión permanente en el líquido y a la temperatura real.

Grundfos puede suministrar cables de inmersión para una amplia gama de instalaciones.

El corte en sección (q) del cable debe reunir los siguientes requisitos:

1. El cable de inmersión debe estar dimensionado a la intensidad nominal máxima (I) del motor.
2. La sección debe ser suficiente para producir una caída de tensión aceptable en el cable.

Utilizar la sección mayor que se encuentre en los puntos 1 y 2.

Re 1: La siguiente tabla indica el valor de la corriente de los cables de inmersión Grundfos (es decir, la corriente máxima tolerada por el cable de inmersión) a una temperatura ambiente máxima de 30ºC.
Contactar con Grundfos si la temperatura ambiente supera los 30ºC.

Cuando dimensione el cable de inmersión, asegúrese de que la intensidad nominal máxima no supere el valor de la intensidad (I_S).

Para arranque estrella-triángulo, sin embargo, dimensionar el cable de manera que la intensidad nominal máxima del motor x 0,58 no supere el valor de la corriente (I_S) de los cables.

q [mm^2]	I_S [A]
1,5	18,5
2,5	25
4	34
6	43
10	60
16	80
25	101
35	126

q [mm^2]	I_S [A]
50	153
70	196
95	238
120	276
150	319
185	364
240	430
300	497

Si no se utilizan cables de inmersión Grundfos, la sección debe ser seleccionada en base a los valores de corriente de los cables actuales.

Re 2:
Nota: La sección del cable de inmersión debe ser suficientemente grande para cumplir todos los requerimientos referentes a la calidad del voltaje especificados en sección *4.1 General*.

Determinar la caída de tensión para la sección del cable de inmersión por medio de los diagramas de las páginas 148 y 149, donde

I = Intensidad nominal máxima del motor.
Para arranque estrella-triángulo
I = Intensidad nominal máxima del motor x 0,58.

Lx = Longitud del cable transformada en una caída de tensión del 1% de la tensión nominal.

$$Lx = \frac{\text{longitud del cable de inmersión}}{\text{caída de tensión permitida en \%}}$$

q = Sección transversal del cable de inmersión.

Dibujar una línea recta entre los valores actuales de I y Lx. Donde la línea corte al eje q seleccionar la sección que está justo por encima de la intersección.

Los diagramas se han hecho en base a las fórmulas:

Motores sumergibles monofásicos

$$L = \frac{U \times \Delta U}{I \times 2 \times 100 \times \left(\cos\varphi \times \frac{\rho}{q} + \sin\varphi \times XI\right)}$$

Motores sumergibles trifásicos

$$L = \frac{U \times \Delta U}{I \times 1{,}73 \times 100 \times \left(\cos\varphi \times \frac{\rho}{q} + \sin\varphi \times XI\right)}$$

donde

L = Longitud del cable de inmersión [m]
U = Tensión nominal [V]
ΔU = Caída de tensión [%]
I = Intensidad nominal máxima del motor [A]
$\cos\varphi$ = 0,9
ρ = Resistencia específica: 0,02 [Ωmm^2/m]
q = Sección del cable de inmersión [mm^2]
$\sin\varphi$ = 0,436
XI = Resistencia de inducción: 0,078 x 10^{-3} [Ω/m]

4.5 Control de MS 402 monofásico

El motor sumergible MS 402 monofásico incorpora una protección, la cual para el motor en caso de una excesiva temperatura en los bobinados mientras el motor está todavía conectado. Tener esto en cuenta cuando el motor forma parte de un sistema de control.

Si se incluye un compresor en un sistema de control junto con un filtro ocre, el compresor funcionará continuamente una vez que la protección haya parado el motor, a no ser que se hayan tomado otras precauciones especiales.

4.6 Conexión de motores monofásicos

4.6.1 Motores de 2 hilos

Los motores de 2 hilos Grundfos MS 402 incorporan una protección de motor y un dispositivo de arranque y son, por tanto, adecuados para una conexión directa a la red, ver fig. 11.

TM00 1358 5092

Fig. 11 Motores de 2 hilos

4.6.2 Motores PSC

Los motores PSC están conectados a la red eléctrica por medio de un condensador de funcionamiento, el cual debe estar dimensionado para un funcionamiento continuo.

Seleccionar el tamaño correcto del condensador en la tabla siguiente:

Motor	Condensador
0,25 kW	12,5 µF / 400 V / 50 Hz
0,37 kW	16 µF / 400 V / 50 Hz
0,55 kW	20 µF / 400 V / 50 Hz
0,75 kW	30 µF / 400 V / 50 Hz
1,10 kW	40 µF / 400 V / 50 Hz
1,50 kW	50 µF / 400 V / 50 Hz
2,20 kW	75 µF / 400 V / 50 Hz

El motor Grundfos MS 402 PSC incorpora protección de motor y debe estar conectado a la red como muestra la fig. 12.

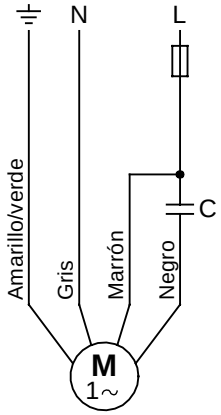

TM00 1359 5092

Fig. 12 Motores PSC

Ver www.franklin-electric.com y la fig. 13.

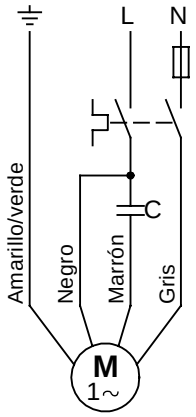

TM00 1361 1200

Fig. 13 Motores sumergibles Franklin

4.6.3 Motores de 3 hilos

Los motores Grundfos MS 4000 de 3 hilos deben estar conectados a la red mediante una caja de control Grundfos SA-SPM 2 ó 3 que incorpora una protección de motor.

Los motores Grundfos MS 402 de 3 hilos incorporan protección de motor y deben ser conectados a la red mediante una caja de control Grundfos SA-SPM 2 ó 3 sin protección de motor.

La conexión de los motores MS 4000 y MS 402 aparece en la tabla siguiente:

Motor	Cable	Caja de control	Red
Hasta 0,75 kW	Gris Marrón Negro Amarillo/verde	1 N 2 L 3 SA-SPM 2	N L PE
Desde 1,10 kW	Gris Marrón Negro Amarillo/verde	1 N 2 L 3 SA-SPM 3	N L PE

4.7 Conexión de motores trifásicos

Los motores sumergibles trifásicos deben estar protegidos, ver sección *4.2.2 Motores trifásicos*.

Para la conexión eléctrica por medio del MP 204, consultar las instrucciones de instalación y funcionamiento para esta unidad.

Cuando se utiliza un arrancador de motor convencional, las conexiones eléctricas deben llevarse a cabo como se describe más abajo.

4.7.1 Comprobación del sentido de giro

Nota: La bomba no debe ser arrancada hasta que el interconector de aspiración esté completamente sumergido en el líquido.

Cuando la bomba ha sido conectada al suministro eléctrico, determinar el sentido de giro correcto como sigue:

1. Arrancar la bomba y comprobar la cantidad de agua y la altura desarrollada.
2. Parar la bomba e intercambiar dos de las conexiones de fases.
   En el caso de motores bobinados para arranque estrella-triángulo, cambiar U1 por V1 y U2 por V2.
3. Arrancar la bomba y comprobar la cantidad de agua y la altura desarrollada.
4. Parar la bomba.
5. Comparar los resultados tomados en los puntos 1 y 3.
   La conexión que da mayor cantidad de agua y mayor altura es la conexión correcta.

E

4.7.2 Motores Grundfos, arranque directo en línea

La conexión de los motores sumergibles Grundfos bobinados para arranque directo en línea aparece en la siguiente tabla y en la fig. 14.

Red	Cable/Conexión
	Motores Grundfos de 4" y 6"
PE	PE (amarillo/verde)
L1	U (marrón)
L2	V (negro)
L3	W (gris)

Comprobar el sentido de giro como se describe en sección *4.7.1 Comprobación del sentido de giro*.

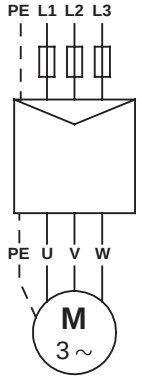

TM03 2099 3705

Fig. 14 Motores Grundfos, arranque directo en línea

4.7.3 Motores Grundfos, arranque estrella-triángulo

La conexión de los motores sumergibles Grundfos bobinados para arranque estrella-triángulo aparece en la siguiente tabla y en la fig. 15.

Conexión	Motores Grundfos de 6"
PE	Amarillo/verde
U1	Marrón
V1	Negro
W1	Gris
W2	Marrón
U2	Negro
V2	Gris

Comprobar el sentido de giro como se describe en sección *4.7.1 Comprobación del sentido de giro*.

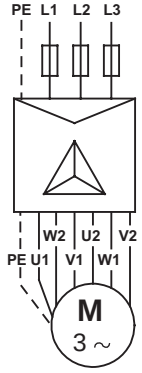

TM03 2100 3705

Fig. 15 Motores Grundfos, arranque estrella-triángulo

Si no es necesario un arranque estrella-triángulo pero sí un arranque directo en línea, los motores sumergibles deben estar conectados como muestra la fig. 16.

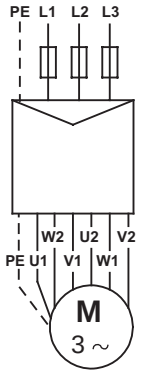

TM03 2101 3705

Fig. 16 Motores Grundfos, arranque directo en línea

4.7.4 Conexión en caso de marca o conexión de cable no identificada

Si no se sabe donde deben estar conectados los hilos individuales a la red eléctrica, proceder de la siguiente manera para asegurar un sentido de giro correcto:

Motores bobinados para arranque directo

Conectar la bomba a la red como se supone que es correcto.

Luego comprobar el sentido de giro como se describe en sección *4.7.1 Comprobación del sentido de giro*.

Motores bobinados para arranque estrella-triángulo

Los bobinados del motor se determinan por medio de un ohmímetro, y el conjunto de hilos para los bobinados individuales son denominados, por consiguiente: U1-U2, V1-V2 y W1-W2, ver fig. 17.

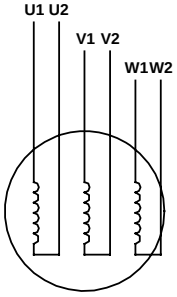

TM00 1367 5092

Fig. 17 Marca/conexión de cable sin identificar – motores para arranque estrella-triángulo

Si es necesario un arranque estrella-triángulo, los hilos deben estar conectados como muestra la fig. 15.

Si es necesario un arranque directo, los hilos deben estar conectados como muestra la fig. 16.

Luego comprobar el sentido de giro como se describe en sección *4.7.1 Comprobación del sentido de giro*.

4.7.5 Motores Franklin, Mercury y Pleuger

Las conexiones para los motores Franklin, Mercury y Pleuger aparecen en sección *4.7.4 Conexión en caso de marca o conexión de cable no identificada*.

E

5. Instalación de la bomba

Antes de empezar cualquier trabajo en la bomba/motor asegúrese de que el suministro eléctrico está desconectado y de que no puede conectarse accidentalmente.

5.1 Montaje del motor a la bomba

Cuando el cuerpo hidráulico y el motor se suministran como unidades separadas (bombas largas), montar el motor al cuerpo hidráulico como se indica a continuación:

1. Utilizar abrazaderas para tubería para sujetar el motor.
2. Colocar el motor en posición vertical en la tapa del pozo, ver fig. 18.

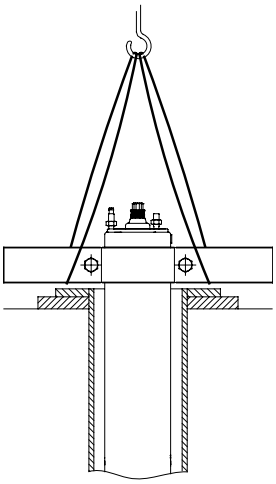

TM00 5259 2402

Fig. 18 Motor en posición vertical

3. Levantar el cuerpo hidráulico mediante las abrazaderas montadas en la tubería de extensión, ver fig. 19.

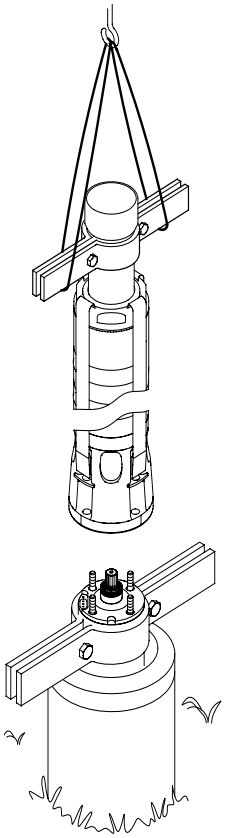

TM02 5263 2502

Fig. 19 Levantar la bomba y acoplarla

4. Colocar el cuerpo hidráulico encima del motor.
5. Poner y apretar las tuercas, ver la siguiente tabla.

Los pernos y tuercas que aseguran las abrazaderas a la bomba deben apretarse diagonalmente a los pares de torsión indicados en la siguiente tabla:

Abrazaderas Pernos/tuercas	Par de torsión [Nm]
M8	18
M10	35
M12	45
M16	120
SP 215, 50 Hz, con más de 8 etapas SP 215, 60 Hz, con más de 5 etapas	150

Nota: Asegúrese de que el acoplamiento entre bomba y motor encaja adecuadamente.

Al montar el motor al cuerpo hidráulico, las tuercas deben apretarse diagonalmente a los pares de torsión indicados en la siguiente tabla:

Bomba/motor Diámetro del perno	Par de torsión [Nm]
M8	18
M12	70
M16	150
M20	280

Nota: Asegúrese de que las cámaras de la bomba estén alineadas una vez esté terminado el montaje.

E

5.2 Desconexión y colocación del protector del cable

Para la desconexión y colocación de protector(es) del cable, ver páginas 150 y 151.

Si el protector del cable está roscado a la bomba, como en las SP 215 y bombas encamisadas, la protección del cable debe ser desconectada y colocada por medio de tornillos.

Nota: Asegúrese de que las cámaras de la bomba estén alineadas una vez esté terminado el montaje.

5.3 Colocación del cable de inmersión

5.3.1 Motores sumergibles Grundfos

Antes de colocar el cable de inmersión al motor, asegúrese de que el enchufe del cable está limpio y seco.

Para facilitar la colocación del cable, lubricar las piezas de caucho del enchufe del cable con pasta de silicona aislante.

Apretar los tornillos sujetando el cable a los pares de torsión indicados:

MS 402: 2,0 Nm.
MS 4000: 2,0 Nm.
MS 6000: 4,0-5,0 Nm.
MMS 6000: 10 Nm.
MMS 12000: 15 Nm.

5.4 Tubería de elevación

Si, cuando la tubería de elevación está fijada a la bomba, se utiliza una herramienta como por ejemplo una llave de cadena para tuberías, la bomba debe estar sujeta solamente por la cámara de descarga de la bomba.

Las uniones roscadas de la tubería de elevación deben estar todas bien cortadas y colocadas para asegurar que no trabajen sueltas cuando se sometan a una reacción de torsión causada por los arranques y paradas de la bomba.

La rosca de la primera sección de la tubería de elevación que tiene que enroscarse en la bomba no debe ser más larga que las roscas de la bomba.

Si puede ser transmitido ruido al edificio a través de la tubería, es aconsejable utilizar tuberías de plástico.

Nota: Las tuberías de plástico se recomiendan solamente para bombas de 4".

Cuando se utilizan tuberías de plástico, la bomba deberá estar asegurada con un cable de suspensión aflojado sujeto a la cámara de descarga de la bomba, ver fig. 20.

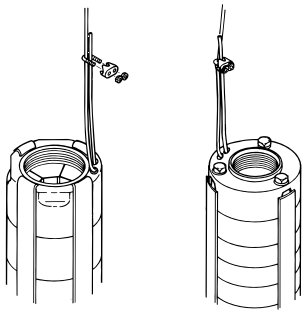

Fig. 20 Fijar el cable de suspensión

Cuando se conectan tuberías de plástico, se deberá utilizar un acoplamiento de compresión entre la bomba y la primera sección de la tubería.

Si se utilizan tuberías con bridas, las bridas deben estar ranuradas para sujetar el cable de inmersión y la manguera indicadora de agua, si está colocada.

5.5 Máxima profundidad de instalación por debajo del nivel del agua

Grundfos MS 402:	150 m.
Grundfos MS 4000:	600 m.
Grundfos MS 6000:	600 m.
Grundfos MMS:	250 m.
Motores Franklin:	350 m.
Motores Mercury:	350 m.
Motores Pleuger:	350 m.

5.6 Colocación del cable

Deben utilizarse abrazaderas cada 3 m de cable para fijar el cable de inmersión y el de suspensión, si está instalado, a la tubería de elevación de la bomba.

Grundfos suministra el conjunto de abrazaderas para el cable bajo pedido. El conjunto consiste en una cinta de goma de 1,5 mm de grosor y 16 botones.

Colocación del cable: Cortar la cinta de goma de tal forma que la pieza sin aberturas sea lo más larga posible.
Insertar un botón en la primera abertura.
Colocar el cable de suspensión al lado del cable de inmersión, fig. 21.

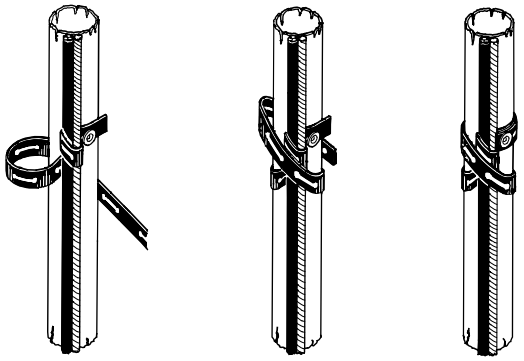

Fig. 21 Montar las abrazaderas del cable

Enrollar la cinta una vez alrededor del cable de suspensión y el de inmersión.
Luego enrollarla fuertemente por lo menos dos veces alrededor de la tubería y los cables.
Poner la abertura sobre el botón y cortar la cinta.

Donde se utilizan secciones de cables grandes, será necesario enrrollar la cinta varias veces.

Donde se utilizan tuberías de plástico debe dejarse cierta holgura entre cada abrazadera del cable, ya que las tuberías de plástico se ensanchan bajo presión.

Cuando se utilizan tuberías con bridas, las abrazaderas de cable deben colocarse por encima y por debajo de cada unión.

5.7 Introducción de la bomba en el pozo

Se recomienda comprobar la perforación del pozo con un calibrador interior antes de introducir la bomba para asegurar un paso sin obstáculos.

Introducir la bomba cuidadosamente en el pozo teniendo cuidado de no dañar el cable del motor ni el cable de inmersión.

Nota: No bajar o subir la bomba por medio del cable del motor.

5.8 Profundidad de la instalación

El nivel dinámico del agua debe estar siempre por encima del interconector de aspiración de la bomba, ver sección *3.2 Requisitos de colocación* y fig. 22.

La presión mínima de entrada está indicada en la curva NPSH de la bomba.
El margen mínimo de seguridad debe ser de 1 metro de altura.

Se recomienda instalar la bomba de manera que la parte del motor esté por encima del filtro del pozo para asegurar una refrigeración óptima, ver sección *3.4 Temperatura del líquido/refrigeración*.

Cuando la bomba se ha instalado a la profundidad requerida, la instalación debe finalizarse con un sellado del pozo.

Aflojar el cable de suspensión de forma que quede descargado y bloqueado al sellado del pozo por medio de un tope de cable.

Nota: Para bombas colocadas con tuberías de plástico, hay que tener en cuenta la expansión de las tuberías cuando están cargadas, a la hora de decidir la profundidad de instalación de la bomba.

E

6. Puesta en marcha y funcionamiento

6.1 Puesta en marcha

Cuando la bomba se ha conectado correctamente y se ha sumergido en el líquido que va a ser bombeado, debe ponerse en marcha con la válvula de descarga cerrada a 1/3 de su máximo volumen de agua.

Comprobar el sentido de giro como se describe en sección *4.7.1 Comprobación del sentido de giro*.

Si hay impurezas en el agua, la válvula deberá abrirse gradualmente a medida que se aclara el agua. La bomba no debe ser parada hasta que el agua esté completamente limpia, ya que, de lo contrario, las piezas de la bomba y la válvula de retención pueden obstruirse.

A medida que se vaya abriendo la válvula, se deberá comprobar la bajada de nivel de agua para asegurar que la bomba permanezca siempre sumergida.

El nivel dinámico del agua deberá estar siempre por encima del interconector de aspiración de la bomba, ver sección *3.2 Requisitos de colocación* y fig. 22.

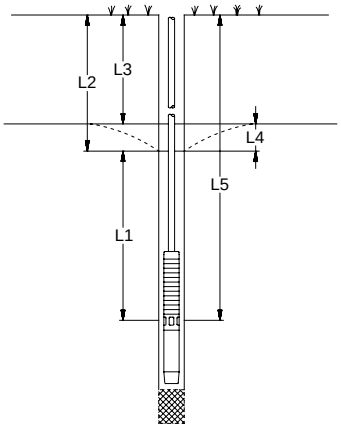

Fig. 22 Comparación de distintos niveles de agua

L1: Mínima profundidad de la instalación por debajo del nivel dinámico del agua. El mínimo recomendado es 1 metro.

L2: Profundidad al nivel dinámico del agua.

L3: Profundidad al nivel estático del agua.

L4: Descenso. Es la diferencia entre el nivel dinámico y el nivel estático del agua.

L5: Profundidad de la instalación.

Si la bomba puede bombear más de lo que el pozo produce, se recomienda instalar una unidad de control Grundfos MP 204 u otro tipo de protección contra la marcha en seco.

Si no se han instalado electrodos o interruptores de nivel, el nivel de agua puede descender hasta el interconector de aspiración de la bomba y entonces la bomba tomaría aire.

Nota: Funcionar mucho tiempo con agua que contiene aire puede dañar la bomba y ocasionar una insuficiente refrigeración del motor.

6.2 Funcionamiento

6.2.1 Mínima velocidad de fluido

Para asegurar la refrigeración necesaria del motor, la bomba nunca debe tener un ajuste tan bajo que no puedan conseguirse los requerimientos de refrigeración especificados en sección *3.4 Temperatura del líquido/refrigeración*.

6.2.2 Frecuencia de arranques y paradas

Tipo de motor	Número de arranques
MS 402	Se recomienda como mínimo 1 por año. Máximo 100 por hora. Máximo 300 por día.
MS 4000	Se recomienda como mínimo 1 por año. Máximo 100 por hora. Máximo 300 por día.
MS 6000	Se recomienda como mínimo 1 por año. Máximo 30 por hora. Máximo 300 por día.
MMS 6000	Se recomienda como mínimo 1 por año. Máximo 15 por hora. Máximo 360 por día.
MMS 8000	Se recomienda como mínimo 1 por año. Máximo 10 por hora. Máximo 240 por día.
MMS 10000	Se recomienda como mínimo 1 por año. Máximo 8 por hora. Máximo 190 por día.
MMS 12000	Se recomienda como mínimo 1 por año. Máximo 5 por hora. Máximo 120 por día.
Franklin	Se recomienda como mínimo 1 por año. Máximo 100 por día.
Mercury 6"	Se recomienda como mínimo 1 por año. Máximo 20 por hora.
Mercury 8"	Se recomienda como mínimo 1 por año. Máximo 15 por hora.
Mercury 10"	Se recomienda como mínimo 1 por año. Máximo 10 por hora.
Mercury 12"	Se recomienda como mínimo 1 por año. Máximo 6 por hora.
Pleuger	Se recomienda como mínimo 1 por año. Máximo 100 por día.

7. Mantenimiento y reparación

Las bombas no necesitan ningún mantenimiento.

Todas las bombas son fáciles de reparar.

Grundfos suministra Kits y herramientas de reparación.

Las bombas pueden ser reparadas en un Servicio técnico Grundfos.

Si la bomba se ha utilizado para un líquido perjudicial para la salud o tóxico, la bomba será clasificada como contaminada.

Al pedir a Grundfos la reparación de una bomba, Grundfos debe ser informado de los detalles del líquido bombeado, etc, *antes* del envío de la bomba a reparar. De lo contrario Grundfos puede negarse a repararla.

Los posibles gastos de devolución de la bomba serán a cargo del cliente.

E

8. Localización de fallos

Fallo	Causa	Solución
1. La bomba no funciona.	a) Los fusibles están fundidos.	Sustituir los fusibles fundidos. Si los nuevos también se funden, debe comprobarse la instalación eléctrica y el cable de inmersión.
	b) El ELCB se ha disparado.	Conectar el ELCB.
	c) No hay suministro eléctrico.	Contactar con las autoridades del suministro eléctrico.
	d) Se ha disparado el protector de arranque.	Rearmar el protector de arranque (automática o manualmente). Si se dispara de nuevo, comprobar la tensión. Si es correcta, ver los ejemplos e) - h).
	e) Arrancador de motor/contactor está defectuoso.	Sustituir el arrancador del motor/contactor.
	f) El dispositivo de arranque está defectuoso.	Reparar/sustituir el dispositivo de arranque.
	g) El circuito de control se ha interrumpido o está defectuoso.	Comprobar la instalación eléctrica.
	h) La protección contra trabajo en seco ha cortado el suministro eléctrico a la bomba, debido a una bajada del nivel del agua.	Comprobar el nivel del agua. Si es correcto, comprobar los electrodos de nivel de agua o los interruptores de nivel.
	i) La bomba/cable de inmersión está defectuoso.	Reparar/sustituir la bomba/cable.
2. La bomba funciona pero no da agua.	a) La válvula de descarga está cerrada.	Abrir la válvula.
	b) El pozo no tiene agua o el nivel es demasiado bajo.	Ver punto 3 a).
	c) La válvula de retención está atascada en posición cerrada.	Sacar la bomba y limpiar o sustituir la válvula.
	d) El filtro de aspiración está obstruido.	Sacar la bomba y limpiar el filtro.
	e) La bomba está defectuosa.	Reparar/sustituir la bomba.
3. La bomba funciona a capacidad reducida.	a) La bajada es mayor de lo previsto.	Aumentar la profundidad de la instalación de la bomba, estrangular la bomba o sustituirla por un modelo más pequeño para obtener una capacidad menor.
	b) Sentido de giro erróneo.	Ver sección *4.7.1 Comprobación del sentido de giro*.
	c) Las válvulas de la tubería de descarga están parcialmente cerradas/bloqueadas.	Comprobar y limpiar/sustituir las válvulas, si es necesario.
	d) La tubería de descarga está parcialmente bloqueada por impurezas (ocre).	Limpiar/sustituir la tubería de descarga.
	e) La válvula de retención de la bomba está parcialmente bloqueada.	Sacar la bomba y comprobar/sustituir la válvula.
	f) La bomba y la tubería de elevación están parcialmente bloqueadas por impurezas (ocre).	Sacar la bomba. Comprobar y limpiar o sustituir la bomba, si es necesario. Limpiar las tuberías.
	g) La bomba está defectuosa.	Reparar/sustituir la bomba.
	h) Pérdidas en la tubería.	Comprobar y reparar la tubería.
	i) La tubería de elevación está defectuosa.	Sustituir la tubería de elevación.
4. Frecuentes arranques y paradas.	a) El diferencial del interruptor de presión entre las presiones de arranque y parada es demasiado bajo.	Aumentar el diferencial. No obstante, la presión de parada no debe exceder la presión de funcionamiento del tanque de presión, y la presión de arranque debe ser suficientemente alta para asegurar un suministro de agua suficiente.
	b) Los electrodos de nivel de agua o los interruptores de nivel en el depósito no se han instalado correctamente.	Ajustar los intervalos de los electrodos/interruptores de nivel para asegurar un tiempo adecuado entre el arranque y la parada de la bomba. Ver instrucciones de instalación y funcionamiento para los dispositivos automáticos utilizados. Si los intervalos entre parada/arranque no pueden cambiarse automáticamente, la capacidad de la bomba puede reducirse estrangulando la válvula de descarga.
	c) La válvula de retención tiene pérdidas o está semi-abierta.	Sacar la bomba y limpiar o sustituir la válvula de retención.
	d) El volumen de aire en el tanque de presión/diafragma es demasiado pequeño.	Ajustar el volumen de aire en el tanque de presión/diafragma de acuerdo con las instrucciones de instalación y funcionamiento.
	e) El tanque de presión/diafragma es demasiado pequeño.	Aumentar la capacidad del tanque de presión/diafragma sustituyéndolo o complementándolo con otro tanque.
	f) El diafragma del tanque está defectuoso.	Comprobar el tanque de diafragma.

E

9. Comprobación de motor y cable

1. Tensión de alimentación 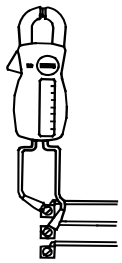 TM00 1371 5092	Medir la tensión entre las fases mediante un voltímetro. En motores monofásicos, medir entre la fase y el neutro o entre dos fases, dependiendo del tipo de suministro. Conectar el voltímetro a los terminales en el arrancador del motor.	Cuando el motor está cargado, la tensión debe estar entre los intervalos especificados en sección *4.1 General*. El motor puede quemarse si hay variaciones mayores en la tensión. Grandes variaciones de tensión indican un escaso suministro eléctrico, y la bomba deberá pararse hasta que se remedie el fallo.
2. Consumo de intensidad 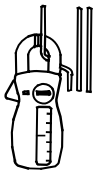 TM00 1372 5092	Medir los amperios de cada fase mientras la bomba está funcionando a una altura de descarga constante (si es posible, a la capacidad donde el motor está más cargado). Para la máxima intensidad de funcionamiento, ver la placa de datos.	En motores trifásicos, la diferencia entre la fase con el consumo más alto y la corriente en la fase con el consumo más bajo no debe superar el 5%. Si eso ocurre, o si la corriente supera la plena carga, pueden producirse los siguientes fallos: • Contactos del arrancador del motor quemados. Sustituir los contactos o la caja de control para un funcionamiento monofásico. • Conexión defectuosa en los cables, posiblemente en la junta del cable. Ver punto 3. • Tensión de alimentación demasiado alta o demasiado baja. Ver punto 1. • Los bobinados del motor tienen cortocircuito o están parcialmente desunidos. Ver punto 3. • La bomba dañada está causando sobrecarga al motor. Sacar la bomba para revisarla. • El valor de resistencia de los bobinados del motor se desvía demasiado (trifásicos). Cambiar las fases para lograr una carga más uniforme. Si esto no ayuda, ver punto 3.
Puntos 3 y 4: No es necesario medir cuando la tensión de alimentación y el consumo de intensidad son normales.		
3. Resistencia del bobinado 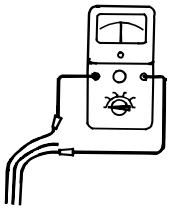 TM00 1373 5092	Desconectar el cable de inmersión del arrancador del motor. Medir la resistencia del bobinado entre los hilos del cable de inmersión.	Para motores trifásicos, la desviación entre el valor más alto y más bajo no debe superar el 10%. Si la desviación es superior, sacar la bomba. Medir el motor, el cable del motor y el cable de inmersión por separado y reparar/sustituir las piezas defectuosas. **Nota:** En motores monofásicos de 3 hilos, el bobinado de funcionamiento tomará el mínimo valor de resistencia.
4. Resistencia de aislamiento 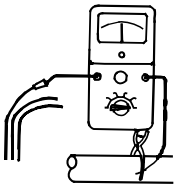 TM00 1374 5092	Desconectar el cable de inmersión del arrancador del motor. Medir la resistencia de aislamiento desde cada fase a tierra (masa). Asegúrese de que la conexión a tierra está realizada convenientemente.	Si la resistencia de aislamiento es inferior a 0,5 MΩ, debe sacarse la bomba para reparar el motor o el cable. Las normativas locales pueden especificar otros valores para la resistencia de aislamiento.

10. Eliminación

La eliminación de este producto o partes de él debe realizarse de forma respetuosa con el medio ambiente:

1. Utilizar el servicio local, público o privado, de recogida de residuos.
2. Si esto no es posible, contactar con la compañía o servicio técnico Grundfos más cercano.

E

ÍNDICE

P

Antes da instalação, leia estas instruções de instalação e funcionamento. A montagem e o funcionamento também devem obedecer aos regulamentos locais e aos códigos de boa prática, geralmente aceites.

Estas instruções referem-se aos motores submersíveis Grundfos, dos tipos MS e MMS, e às bombas submersíveis Grundfos, modelo SP, equipadas com motores submersíveis, tipos MS e MMS Grundfos, Franklin 4"-8", Mercury 6"-12" e Pleuger 6"-12".

Se a bomba for montada com outro motor não Grundfos MS ou MMS, tenha em consideração que as especificações podem ser diferentes das apresentadas neste Manual de Instruções.

1. Entrega e armazenagem

1.1 Entrega

As bombas submersíveis Grundfos são fornecidas da fábrica numa embalagem própria na qual devem ficar até serem instaladas.

Deve-se ter cuidado ao manusear a bomba, durante o desembalamento e antes da instalação, de forma a evitar desajustamentos provocados por movimentos bruscos.

Nota: As bombas devem manter-se na embalagem até que sejam colocadas na posição vertical durante a instalação. Quando a bomba e o motor forem fornecidos separadamente (bombas com muitos estágios), monte o motor na bomba como explicado na secção *5.1 Montagem do motor na bomba*.

Nota: A placa extra de informações fornecida com a bomba deve ficar fixada junto do local da instalação.

A bomba não deve ficar sujeita a choques e impactos desnecessários.

1.2 Armazenagem e manuseamento

Temperatura de armazenagem

Bomba: –20ºC a +60ºC.
Motor: –20ºC a +70ºC.

Os motores devem ser arrefecidos num local fechado, seco e bem ventilado.

Nota: Se os motores MMS estiverem armazenados mais de um ano, deve-se rodar à mão o veio uma vez por mês.
Se o motor esteve armazenado mais de um ano antes da sua instalação, deve-se desmontar e verificar todas as peças rotativas do motor.

A bomba não deve ficar exposta directamenta à luz do sol.

Depois da bomba ter sido desembalada, deve ser colocada na horizontal, apoiada de forma adequada, ou na vertical para evitar desajustamentos da bomba. Não deve oscilar nem cair. Durante o período de armazenagem, a bomba pode ficar apoiada tal como se exemplifica na fig. 1.

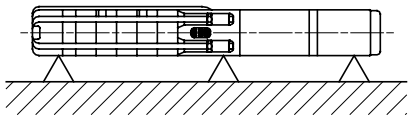

Fig. 1 Posição da bomba durante o armazenamento

1.2.1 Protecção contra formação de gelo

Se a bomba voltar a ser armazenada após utilização, deve permanecer num local sem risco de formação de gelo, ou então deve verificar se o liquído do motor possui anti-congelante.

2. Informações gerais

2.1 Aplicação

As bombas submersíveis Grundfos, modelo SP, destinam-se a uma vasta gama de aplicações de abastecimento de água e transferência de líquidos, tais como o abastecimento de água potável a residências particulares ou instalações hidráulicas de estufas ou quintas, abaixamento de nível de águas subterrâneas e pressurização, e várias actividades industriais.

As bombas são para instalar com o filtro de aspiração abaixo do nível da água. As bombas podem ser instaladas na horizontal ou na vertical, ver secção *3.2 Condições de instalação*.

2.2 Líquidos bombeados

Líquidos limpos, finos e **não-explosivos**, sem partículas sólidas ou fibras.

O conteúdo máximo de areia na água não deve exceder 50 g/m^3. Um conteúdo de areia superior irá reduzir a vida útil da bomba e aumentar o risco de bloqueio.

Nota: Se a bomba for utilizada para bombear líquidos com uma densidade superior à da água, devem ser utilizados motores de potência proporcionalmente superior.

Se líquidos com uma viscosidade superior à da água vão ser bombeados favor contactar a Grundfos.

Os modelos especiais SP A N, SP A R, SP N, SP R e SPE destinam-se a líquidos mais agressivos que água potável.

A temperatura máxima do líquido vem referida na secção *3.4 Temperaturas do líquido/Arrefecimento*.

2.3 Nível de ruído

O nível de ruído foi medido em conformidade com as regras estabelecidas pela Directiva 98/37/CE da CE relativamente a maquinaria.

Nível de ruído das bombas

Aplica-se a bombas submersas em água sem válvula de regulação externa.

Modelo da bomba	$\overline{L}_{pA}$ [dB(A)]
SP 1A	<70
SP 2A	<70
SP 3A	<70
SP 5A	<70
SP 8A	<70
SP 14A	<70
SP 17	<70
SP 30	<70
SP 46	<70
SP 60	<70
SP 77	<70
SP 95	<70
SP 125	79
SP 160	79
SP 215	82

Nível de ruído dos motores

O nível de ruído dos motores MS e MMS Grundfos é inferior a 70 dB(A).

Motores de outras marcas: Ver as instruções de instalação e funcionamento desses motores.

3. Preparação

Antes de começar a trabalhar na bomba, verificar se a alimentação eléctrica está desligada e não pode ser ligada acidentalmente.

3.1 Verificação do líquido do motor

Os motores submersíveis são cheios de fábrica com um líquido especial não tóxico à prova de congelamento até –20ºC.

Nota: O nível do líquido do motor deve ser verificado e reposto, se necessário.

Nota: Se existir o risco de formação de gelo, deve ser utilizado para o enchimento do motor um líquido especial da Grundfos, ou então água limpa (no entanto, **nunca** deve ser utilizada água destilada).

O enchimento deve ser efectuado de acordo com a seguinte descrição.

3.1.1 Motores submersíveis Grundfos MS 4000 e MS 402

O enchimento do motor com líquido é feito através de um orifício existente numa das seguintes posições:

MS 4000: no topo do motor.

MS 402: no fundo do motor.

1. Colocar a bomba submersível tal como se exemplifica na fig. 2. O orifício de enchimento deve ficar no ponto mais alto do motor.
2. Retirar o parafuso do orifício de enchimento.
3. Injectar o líquido no motor com a ajuda de uma seringa de enchimento, fig. 2, até o líquido começar a transbordar pelo orifício.
4. Colocar de novo o parafuso no orifício de enchimento e apertá-lo bem antes de mudar a posição da bomba.

Tensões:

MS 4000: 3,0 Nm.

MS 402: 2,0 Nm.

A bomba submersível está agora pronta para ser instalada.

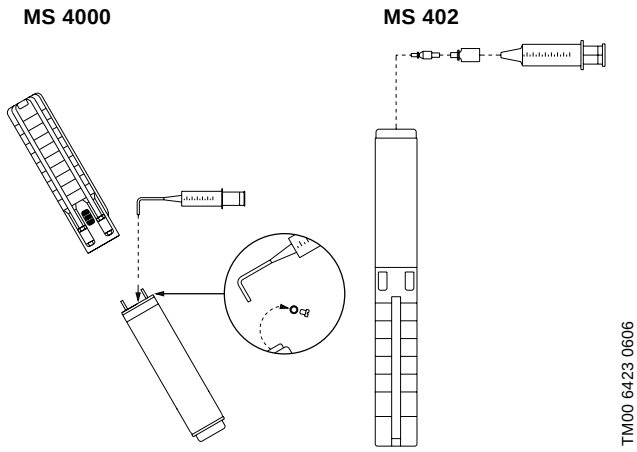

Fig. 2 Posição da bomba durante o enchimento – MS 4000 e MS 402

3.1.2 Motores submersíveis Grundfos MS 6000

- Se o motor for fornecido do stock, o nível do líquido do motor tem de ser verificado, ver fig. 3.
- A verificação do nível do liquido é feita quando as bombas com motor acoplado são fornecidas pela Grundfos.
- No caso de uma reparação o nível do líquido tem de ser verificado, ver fig. 3.

Procedimento de enchimento:

O enchimento do motor com líquido é feito através de um orifício existente no topo do motor.

1. Colocar a bomba submersível tal como se exemplifica na fig. 3. O orifício de enchimento deve ficar no ponto mais alto do motor.
2. Retirar o parafuso do orifício de enchimento.
3. Injectar o líquido no motor com a ajuda de uma seringa de enchimento, fig. 3, até o líquido começar a transbordar pelo orifício.
4. Colocar de novo o parafuso no orifício de enchimento e apertá-lo bem antes de mudar a posição da bomba.

Tensão: 3,0 Nm.

A bomba submersível está agora pronta para ser instalada.

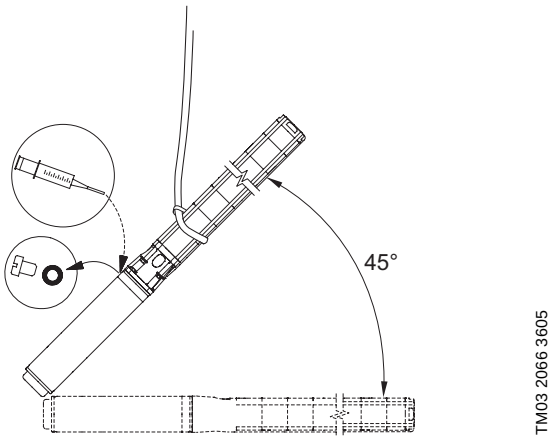

Fig. 3 Posição da bomba durante o enchimento – MS 6000

3.1.3 Motores submersíveis da Grundfos MMS 6000, MMS 8000, MMS 10000 e MMS 12000

Procedimento de enchimento:

1. Colocar o motor num ângulo de 45º com o topo do motor para cima, ver fig. 4.
2. Desaparafusar o tampão A e colocar um funil no orifício.
3. Encher o motor com água até que o líquido dentro do motor atinja o nível do orifício em A.
   Nota: Não utilizar líquido do motor uma vez que contem óleo.
4. Retirar o funil e recolocar o tampão A.

P

Nota: Antes de montar o motor numa bomba depois de um longo período de armazenamento, lubrificar o empanque adicionando umas gotas de água e rodando o veio.

A bomba submersível está agora pronta para ser instalada.

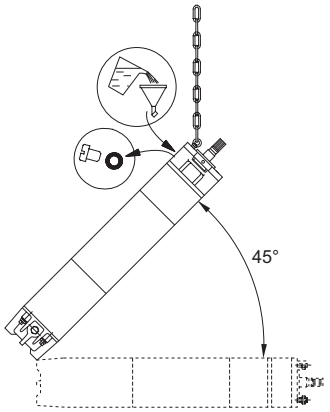

TM03 2065 3605

Fig. 4 Posição do motor durante o enchimento – MMS

3.1.4 Motores submersíveis Franklin a partir de 3 kW

O nível do líquido do motor nos motores submersíveis Franklin 4" e 6" é verificado através da medição a distância entre o fundo do motor e o diafragma de borracha incorporado. Para medir esta profundidade, inserir um paquímetro ou uma pequena haste através do orifício existente até tocar no diafragma, fig. 5.
Nota: Tomar cuidado para não danificar o diafragma.

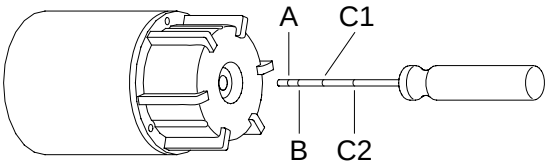

TM00 1353 5092

Fig. 5 Medição da distância do fundo da base ao diafragma

O quadro seguinte indica a profundidade que deve ser medida entre o fundo do motor e o diafragma:

Motor	Dimenção	Profundidade
Franklin 4", 0,25 a 3 kW (ver fig. 6a)	A	8 mm
Franklin 4", 3 a 7,5 kW (ver fig. 6b)	B	16 mm
Franklin 6", 4 a 45 kW (ver fig. 6c)	C1	35 mm
Franklin 6", 4 a 22 kW (ver fig. 6d)	C2	59 mm

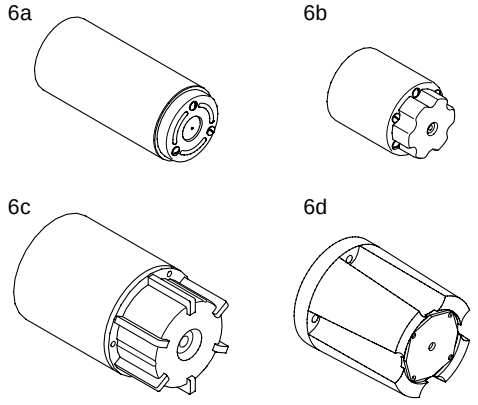

TM00 6422 3695

Fig. 6 Motores submersíveis Franklin

Se a profundidade medida não corresponder aos valores da tabela, proceder aos ajustes descritos na secção *3.1.5 Motores submersíveis Franklin*.

3.1.5 Motores submersíveis Franklin

O nível do líquido do motor nos motores Franklin 8" é verificado da seguinte forma:

1. Retirar o filtro que tapa a válvula existente no topo do motor com a ajuda de uma chave de fendas. Se o filtro tiver fenda, desaparafusar. A posição da válvula de enchimento é mostrada na fig. 7.
2. Pressionar a seringa contra a válvula e injectar o líquido, fig. 7. Se o cone da válvula for demasiado pressionado, pode ficar danificado causando fugas do líquido.
3. Retirar o ar do motor pressionando levemente a ponta da seringa contra a válvula.
4. Repetir o processo de injectar líquido e retirar ar até o líquido começar a sair ou o diafragma estar na posição correcta (Franklin 4" e 6").
5. Reinstalar o filtro após o enchimento.

A bomba submersível está agora pronta para ser instalada.

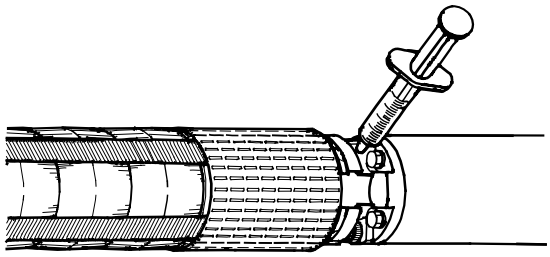

TM00 1354 5092

Fig. 7 Posição da válvula de enchimento

3.1.6 Motores submersíveis Mercury

O nível do líquido do motor é verificado tal como está descrito para os motores Franklin 8", ver secção *3.1.5 Motores submersíveis Franklin*.

3.1.7 Motores submersíveis Pleuger

O nível do líquido do motor é verificado tal como está descrito para os motores Franklin 8", ver secção *3.1.5 Motores submersíveis Franklin*.

3.2 Condições de instalação

Se a bomba vai ser instalada numa posição acessível, o acoplamento deve estar convenientemente protegido do contacto humano. A bomba pode ser, por exemplo, colocada dentro de uma camisa de refrigeração.

Dependendo do tipo de motor, a bomba pode ser instalada tanto na vertical como na horizontal. Uma lista completa de tipos de motor existentes para instalação horizontal é mostrada na secção *3.2.1*.

Se a bomba for instalada na horizontal, a descarga **nunca** deve ficar inferior ao plano horizontal, ver fig. 8.

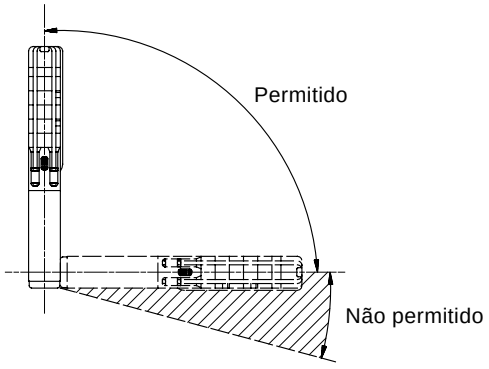

TM00 1355 5092

Fig. 8 Condições de instalação

Se a bomba for instalada na horizontal, por exemplo num reservatório, recomenda-se a instalação de uma camisa de refrigeração.

P

3.2.1 Tabela de motores para instalação horizontal

Modelo do motor	Potência 50 Hz	Potência 60 Hz
	[kW]	[kW]
MS	Todos os modelos	Todos os modelos
MMS 6000	3,7 a 18,5	3,7 a 18,5
MMS 8000	22,0 a 63,0	22,0 a 63,0
MMS 10000	75,0 a 110,0	75,0 a 110,0
MMS 12000	147,0 a 190,0	–

Quando os motores submersíveis Franklin 4" até 2,2 kW inclusivé são accionados mais do que 10 vezes por dia, deve-se inclinar o motor pelo menos 15º acima do plano horizontal a fim de minimizar o desgaste do disco de apoio.

Nota: Durante o funcionamento, o filtro de aspiração da bomba tem de estar completamente submerso no líquido.

Se a bomba for utilizada no bombeamento de líquidos quentes (40º até 60ºC), deve-se tomar precauções de forma a evitar que pessoas toquem acidentalmente na bomba, através da montagem de guardas.

3.3 Diâmetro da bomba/motor

O diâmetro máximo da bomba/motor está indicado nos quadros das páginas 146 e 147.

Deve-se verificar o diâmetro interno do furo com um aparelho apropriado para assegurar que a passagem está desobstruída.

3.4 Temperaturas do líquido/Arrefecimento

A temperatura máxima do líquido e a velocidade mínima do líquido no motor estão referenciadas na tabela seguinte.

O motor deve ser instalado acima do ralo do furo a fim de obter a refrigeração adequada.

Nota: Caso não seja possível obter a velocidade do líquido indicada, deve ser instalada uma camisa de refrigeração.

Se existir o risco de aglomeração de sedimentos, tal como areia, à volta do motor, deverá ser colocada uma camisa de refrigeração para assegurar um arrefecimento apropriado do motor.

3.4.1 Temperatura máxima do líquido

Tendo em conta as peças em borracha da bomba e do motor, a temperatura do líquido não deve exceder os 40ºC (~105ºF). Ver também o quadro seguinte.

A bomba pode funcionar com temperaturas de líquido entre 40ºC e 60ºC (~105ºF e ~140ºF), desde que todas as peças em borracha sejam substituídas de três em três anos.

Motor	Instalação		
	Caudal ao longo do motor	Vertical	Horizontal
Grundfos MS e MMS	**Convecção livre 0 m/s**	20ºC (~68ºF)	Camisa de refrigeração recomendada
Grundfos MS	**0,15 m/s**	40ºC (~105ºF)	40ºC (~105ºF)
Grundfos MS I *	**0,15 m/s**	60ºC (~140ºF) Camisa de refrigeração recomendada	60ºC (~140ºF) Camisa de refrigeração recomendada
Grundfos MMS	**0,15 m/s**	25ºC (~77ºF)	25ºC (~77ºF)
Franklin 4"	**0,08 m/s**	30ºC (~85ºF)	30ºC (~85ºF)
Franklin 6" e 8"	**0,16 m/s**	30ºC (~85ºF)	30ºC (~85ºF)
Mercury	**0,15 m/s**	25ºC (~77ºF)	25ºC (~77ºF)
Pleuger	**0,5 m/s**	30ºC (~86ºF)	30ºC (~86ºF)

* Com pressão ambiente no mínimo de 1 bar (1 MPa)

Nota: Convecção livre significa que o diâmetro do furo, é pelo menos 2" mais largo que o diâmetro do motor submersível.

Motores de outras marcas: Ver especificações do motor.

3.5 Ligação da tubagem

Se o ruído pode ser transmitido ao edifício através da tubagem, recomenda-se a utilização de tubos em plástico.

Nota: Só se recomenda os tubos em plástico para bombas de 4".

Quando são utilizados tubos em plástico, a bomba deve ter a segurança de um cabo de aço de suspensão.

Certificar se os tubos em plástico utilizados são apropriados para a temperatura actual do líquido e pressão da bomba.

Na ligação dos tubos em plástico, deve-se utilizar uma junta de compressão entre a bomba e a primeira secção do tubo.

P

4. Ligações eléctricas

Antes de começar a trabalhar na bomba, verificar se a alimentação eléctrica está desligada e não pode ser ligada acidentalmente.

4.1 Geral

As ligações eléctricas devem ser efectuadas por um técnico autorizado e de acordo com as normas locais.

A tensão de abastecimento, a corrente nominal máxima e cos φ estão referenciadas na placa de informações anexa que **deve** ser fixada junto ao local da instalação.

A qualidade da tensão requerida para os motores submersíveis, **MS** e **MMS** Grundfos, medida nos terminais do motor, é –10%/+6% da tensão nominal durante o funcionamento contínuo (incluindo a variação na tensão de abastecimento e perdas nos cabos).

Além disso, deve-se verificar se existe simetria de tensão nos cabos de alimentação eléctrica, i.e. a mesma diferença de tensão entre as fases individuais, ver também o ponto 2 da secção *9. Verificação do motor e do cabo*.

A bomba deve ser ligada à terra.

A bomba deve ser ligada a um interruptor de corrente externo com uma diferença de contacto mínima de 3 mm entre os pólos.

Se os motores MS da Grundfos têm um sensor de temperatura integrado (Tempcon) não são instalados juntamente com o MP 204 ou uma protecção de motor da Grundfos semelhante, devem ser ligados a um condensador 0,47 μF aprovado para funcionamento fase-fase (IEC 384-14) para ir ao encontro da directiva EC EMC (89/336/EEC). O condensador deve estar ligado às duas fases às quais o transdutor de temperatura está ligado, consulte a fig. 9.

P

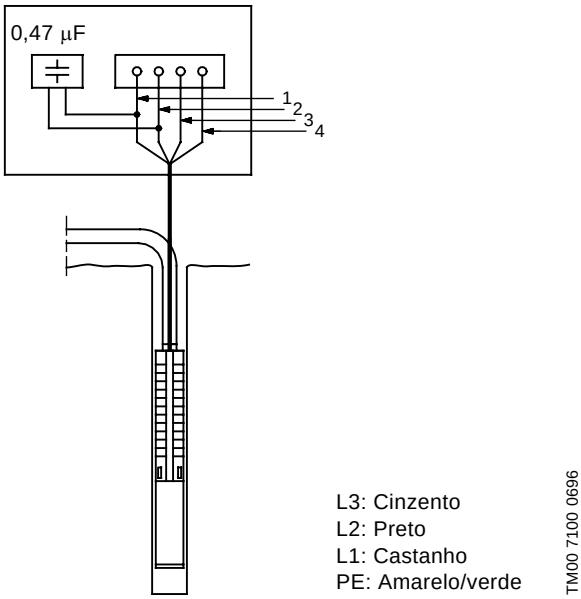

Fig. 9 Ligação do condensador

Os motores estão preparados para arranque directo ou arranque estrela-triângulo e a corrente de arranque é entre 4 e 6 vezes a corrente de funcionamento do motor.

O tempo de arranque da bomba é só cerca de 0,1 seg. O arranque directo é, portanto, normalmente aprovado pelas autoridades de abastecimento eléctrico.

4.1.1 Funcionamento com conversor de frequência

Motores Grundfos

Os motores trifásicos Grundfos podem ser ligados a um conversor de frequência.

Nota: Se um motor MS Grundfos com sensor de temperatura for ligado a um conversor de frequência, o fusível que se encontra incorporado no sensor fundirá, tornando-o inactivo. O sensor não poderá ser reactivado, ficando o motor a operar sem o sensor de temperatura.

Se necessitar um sensor de temperatura, um motor com um sensor Pt100 pode ser encomendado à Grundfos.

Durante o funcionamento com o conversor de frequência, não é aconselhável que o motor atinja frequências superiores à frequência nominal (50 ou 60 Hz). Com relação ao funcionamento da bomba, é importante não reduzir nunca a frequência (e consequentemente a velocidade) para níveis que não assegurem o fluxo necessário do líquido de arrefecimento no motor.

Para evitar danos nas peças da bomba, o motor deve parar quando o caudal da bomba descer abaixo de 0,1 x caudal nominal.

Dependendo do tipo de conversor, o motor pode ficar exposto a picos de tensão prejudiciais.

Motores do tipo MS 402, para funcionarem com tensões até 440 V inclusivé (ver placa do motor), têm de ser protegidos contra picos de tensão superiores a 650 V (valor de pico) entre os terminais de alimentação ao motor.

Deve-se proteger os outros tipos de motores contra picos de tensão superiores a 850 V.

Estas perturbações podem ser eliminadas se instalar um filtro RC entre o conversor de frequência e o motor.

Um eventual ruído crescente produzido pelo motor pode ser eliminado se instalar um filtro LC, o qual também elimina os picos de tensão do conversor de frequência.

Para mais informações, é favor contactar o fornecedor do conversor de frequência ou a Grundfos.

Motores de outras marcas

Favor contactar a Grundfos ou o fabricante.

4.2 Protecção do motor

4.2.1 Motores monofásicos

Os motores submersíveis monofásicos, tipo MS 402, têm um relé térmico incorporado e portanto não necessitam de outra protecção.

Depois de o motor ser desligado pela protecção térmica, os terminais do motor continuam activados. Depois do motor ter arrefecido o suficiente, rearranca automáticamente.

Os motores submersíveis monofásicos, tipo MS 4000, devem ter protecção exterior. Um dispositivo de protecção pode ser incorporado numa caixa de controlo ou em separado.

Os motores Franklin 4" PSC devem ser ligados a um arrancador.

4.2.2 Motores trifásicos

Os motores **MS** Grundfos estão disponíveis com ou sem um sensor de temperatura incorporado.

Motores **com** um sensor de temperatura operacional instalado de fábrica devem ser protegidos através de:

- um arrancador com relé térmico, ou
- um MTP 75 e um arrancador com relé térmico, ou
- um MP 204 e contactor(es).

Motores **sem** ou **com** um sensor de temperatura **não** operacional devem ser protegidos através de:

- um arrancador com relé térmico, ou
- um MP 204 e contactor(es).

Os motores **MMS** Grundfos não possuem sensor de temperatura incorporado. Um sensor Pt100 está disponivel como um acessório.

Motores **com** um sensor Pt100 devem ser protegidos através de:

- um arrancador com relé térmico, ou
- um MP 204 e contactor(es).

Motores **sem** um sensor Pt100 devem ser protegidos através de:

- um arrancador com relé térmico, ou
- um MP 204 e contactor(es).

4.2.3 Ajustamentos requeridos para o arrancador

Nos motores para água fria, o tempo de disparo do arrancador deve ser inferior a 10 segundos a 5 vezes a corrente nominal máxima do motor.

Nota: Se esta condição não se verificar, a garantia do motor fica sem efeito.

Para assegurar uma protecção óptima do motor submersível, o relé térmico do arrancador deve ser regulado de acordo com as seguintes directrizes:

1. Ajustar o relé térmico do arrancador à corrente nominal máxima do motor.
2. Arrancar a bomba e deixá-la funcionar durante meia hora em rendimento normal.
3. Entretanto regular lentamente o relé térmico até alcançar o ponto de disparo.
4. Aumentar este valor em 5%.

O ponto admissível mais elevado é a corrente nominal máxima do motor.

Para motores preparados para arranque estrela-triângulo, o relé térmico do arrancador deve ser regulado como atrás descrito, mas o ajuste máximo deve ser o seguinte:

Ajuste do relé térmico do arrancador = Corrente nominal máxima x 0,58.

O tempo máximo admissível de arranque para o arranque estrela-triângulo ou arrancador com transformador é de 2 segundos.

4.3 Protecção contra descargas eléctricas atmosféricas

Na instalação pode ser aplicado um dispositivo especial de protecção contra sobretensões para proteger o motor contra picos de tensão nos cabos de alimentação eléctrica, provocados pelo ocorrência de descargas eléctricas atmosféricas na área, ver fig. 10.

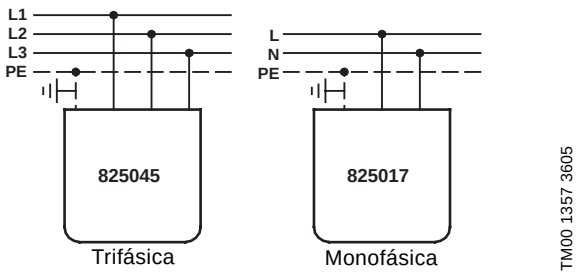

Fig. 10 Montar um aparelho de protecção contra sobretensão

O dispositivo de protecção contra sobretensões não protege, no entanto, contra descargas directas.

O dispositivo de protecção contra sobretensões deve ser ligado à instalação tão perto quanto possível do motor e sempre de acordo com as normas locais.
Contactar a Grundfos para a compra de dispositivos de protecção contra descargas eléctricas atmosféricas.

Os motores submersíveis, tipo MS 402, no entanto, não necessitam de protecção extra contra descargas eléctricas atmosféricas uma vez que estão isolados.

Pode pedir um kit especial de ligação de cabos com um dispositivo de protecção contra sobretensões incorporado para os motores submersíveis 4" Grundfos (peça nº 799911 / 799912).

4.4 Dimensão dos cabos eléctricos

Assegurar que o cabo eléctrico pode suportar uma submersão permanente no líquido à temperatura ambiente.

A Grundfos pode fornecer cabos eléctricos para uma vasta gama de instalações.

A secção do cabo (q) deve obedecer às seguintes condições:

1. O cabo eléctrico deve ser dimensionado tendo em conta a corrente nominal máxima (I) do motor.
2. A secção deve ser suficiente para evitar uma queda de tensão elevada.

Utilize a secção de cabo mais elevada de entre as localizadas nos pontos 1. e 2.

Nota 1: O quadro seguinte especifica o valor da corrente dos cabos eléctricos de alimentação Grundfos (p.e. a corrente máxima admissível pelo cabo) a uma temperatura ambiente máxima de 30ºC.
Favor contactar a Grundfos caso a temperatura ambiente seja superior a 30ºC.

Quando dimensionar o cabo de alimentação, certificar se a corrente nominal máxima não excede a corrente (I_S).

Para arranque estrela-triângulo, no entanto, deve-se dimensionar os cabos de forma que 0,58 x a corrente nominal máxima do motor não exceda a corrente (I_S).

q [mm^2]	I_S [A]	q [mm^2]	I_S [A]
1,5	18,5	50	153
2,5	25	70	196
4	34	95	238
6	43	120	276
10	60	150	319
16	80	185	364
25	101	240	430
35	126	300	497

Se não são utilizados os cabos de alimentação da Grundfos, a secção deve ser seleccionada com base nas dimensões da tabela do respectivo fabricante.

Nota 2: A secção do cabo de alimentação deve ser suficientemente elevada para que sejam observadas todas as condições relativas à qualidade de tensão especificadas na secção *4.1 Geral*.

A queda de tensão para a secção do cabo de alimentação pode ser calculada com a ajuda dos diagramas das páginas 148 e 149, sendo

I = Corrente nominal máxima do motor.
Para o arranque estrela-triângulo
I = corrente nominal máxima do motor x 0,58.

Lx = Comprimento do cabo para uma queda de tensão de 1% da tensão nominal.

$$Lx = \frac{\text{comprimento do cabo de alimentação}}{\text{queda de tensão admitida em \%}}$$

q = Secção do cabo de alimentação.

Desenhar uma linha recta entre o valor-I actual e o valor-Lx.
No ponto em que a linha interseta o eixo-q, seleccionar a secção que está imediatamente acima da interseção.

Os diagramas são feitos com base nas seguintes fórmulas:

Motor submersível monofásico

$$L = \frac{U \times \Delta U}{I \times 2 \times 100 \times \left(\cos\varphi \times \frac{\rho}{q} + \sin\varphi \times XI\right)}$$

Motor submersível trifásico

$$L = \frac{U \times \Delta U}{I \times 1{,}73 \times 100 \times \left(\cos\varphi \times \frac{\rho}{q} + \sin\varphi \times XI\right)}$$

sendo

L = Comprimento do cabo de alimentação [m]
U = Tensão nominal [V]
ΔU = Queda de tensão [%]
I = Corrente nominal máxima do motor [A]
$\cos\varphi$ = 0,9
ρ = Resistência específica: 0,02 [Ωmm^2/m]
q = Secção do cabo de alimentação [mm^2]
$\sin\varphi$ = 0,436
XI = Resistência indutiva: 0,078 x 10^{-3} [Ω/m]

P

4.5 Controlo do motor monofásico MS 402

O motor submersível monofásico MS 402 tem incorporada uma protecção térmica que desliga o motor no caso de temperatura excessiva nos enrolamentos enquanto o motor está a ser alimentado. Há que ter isto em consideração quando o motor está integrado num sistema de controlo.

Se um compressor está integrado no sistema de controlo, juntamente com um filtro de carvão, o compressor continuará em funcionamento quando a protecção térmica desligar o motor submersível, a menos que outras precauções especiais tenham sido tomadas.

4.6 Ligação dos motores monofásicos

4.6.1 Motores com arranque a 2 fios

Os motores MS 402 Grundfos com arranque a 2 fios têm protecção interna do motor e um arrancador incorporados e são portanto adequados para uma ligação directa, ver fig. 11.

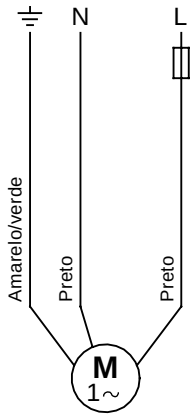

TM00 1358 5092

Fig. 11 Motores com arranque a 2 fios

4.6.2 Motores PSC

Os motores PSC são ligados à rede e utilizam um condensador dimensionado para funcionamento contínuo.

Seleccionar a dimensão correcta do condensador com base no quadro seguinte:

Motor	Condensador
0,25 kW	12,5 µF / 400 V / 50 Hz
0,37 kW	16 µF / 400 V / 50 Hz
0,55 kW	20 µF / 400 V / 50 Hz
0,75 kW	30 µF / 400 V / 50 Hz
1,10 kW	40 µF / 400 V / 50 Hz
1,50 kW	50 µF / 400 V / 50 Hz
2,20 kW	75 µF / 400 V / 50 Hz

O motor PSC MS 402 Grundfos tem protecção do motor incorporada e deve ser ligado como mostra a fig. 12.

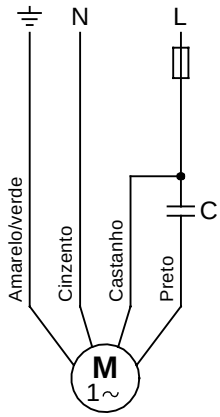

TM00 1359 5092

Fig. 12 Motores PSC

Consulte www.franklin-electric.com e a fig. 13.

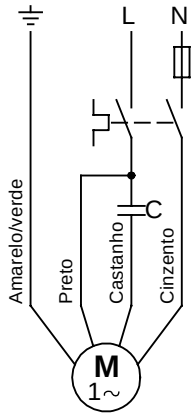

TM00 1361 1200

Fig. 13 Motores submersíveis Franklin

4.6.3 Motores com arranque a 3 fios

Os motores MS 4000 Grundfos com arranque a 3 fios devem ser ligados à rede através da caixa de controlo Grundfos SA-SPM 2 ou 3 que incorpora protecção do motor.

Os motores MS 402 Grundfos com arranque a 3 fios têm protecção do motor incorporada e devem ser ligados à rede através da caixa de controlo Grundfos SA-SPM 2 ou 3 sem protecção do motor incorporada.

As ligações dos MS 4000 e MS 402 estão referenciadas no quadro seguinte:

Motor	Cabo	Caixa de controlo	Rede
Máx. 0,75 kW	Cinzento Castanho Preto Amarelo/verde	1 N 2 L 3 SA-SPM 2	N L PE
Desde 1,10 kW	Cinzento Castanho Preto Amarelo/verde	1 N 2 L 3 SA-SPM 3	N L PE

4.7 Ligação dos motores trifásicos

Os motores trifásicos têm de ser protegidos, ver secção *4.2.2 Motores trifásicos*.

Para a ligação eléctrica através da MP 204, consultar as instruções de instalação e funcionamento específicas desta unidade.

Quando é utilizado um arrancador convencional, a ligação eléctrica deve ser efectuada como se descreve em seguida.

4.7.1 Verificação do sentido de rotação

Nota: A bomba não deve arrancar antes do filtro de aspiração estar completamente submerso no líquido.

Depois da bomba estar ligada à alimentação eléctrica, determine o sentido de rotação correcto da seguinte forma:

1. Arrancar a bomba e verificar o volume de água e a altura de coluna de água desenvolvida.
2. Parar a bomba e trocar duas das fases de ligação. Nos motores preparados para arranque estrela-triângulo, trocar U1 por V1 e U2 por V2.
3. Arrancar a bomba e verificar o volume de água e a altura de coluna de água desenvolvida.
4. Parar a bomba.
5. Comparar os resultados obtidos nos pontos 1. e 3. e a ligação correcta é a que debitar o maior volume de água e a altura de coluna de água mais elevada.

P

4.7.2 Motores Grundfos, arranque directo

A ligação dos motores submersíveis Grundfos preparados para arranque directo está referenciada no quadro seguinte e fig. 14.

Rede	Cabo/ligação
	Motores Grundfos 4" e 6"
PE	PE (amarelo/verde)
L1	U (castanho)
L2	V (preto)
L3	W (cinzento)

Verificar o sentido de rotação conforme se descreve na secção *4.7.1 Verificação do sentido de rotação*.

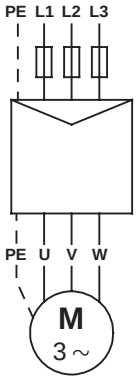

TM03 2099 3705

Fig. 14 Motores Grundfos, arranque directo

4.7.3 Motores Grundfos, arranque estrela-triângulo

A ligação dos motores submersíveis Grundfos preparados para arranque estrela-triângulo está referenciada no quadro seguinte e fig. 15.

Ligação	Motores Grundfos 6"
PE	Amarelo/verde
U1	Castanho
V1	Preto
W1	Cinzento
W2	Castanho
U2	Preto
V2	Cinzento

Verificar o sentido de rotação conforme se descreve na secção *4.7.1 Verificação do sentido de rotação*.

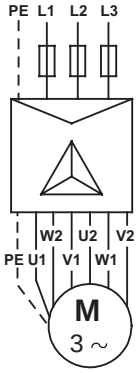

TM03 2100 3705

Fig. 15 Motores Grundfos, arranque estrela-triângulo

Se não é necessário o arranque estrela-triângulo, mas sim o arranque directo, os motores submersíveis devem ser ligados conforme mostra a fig. 16.

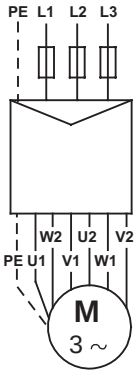

TM03 2101 3705

Fig. 16 Motores Grundfos, arranque directo

4.7.4 Ligação de cabos não identificados

Se se desconhece onde os condutores devem ser ligados à rede para assegurar um correcto sentido de rotação, proceder da seguinte forma:

Motores de arranque directo

Ligar a bomba à rede da forma que se julgar mais correcta.

Depois verificar o sentido de rotação conforme se descreve na secção *4.7.1 Verificação do sentido de rotação*.

Motores de arranque estrela-triângulo

Os enrolamentos do motor são determinados através de um ohmímetro e os fios condutores dos enrolamentos são nomeados de acordo: U1-U2, V1-V2 e W1-W2, ver fig. 17.

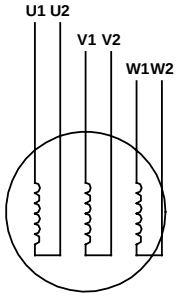

TM00 1367 5092

Fig. 17 Marcação/ligação do cabo não identificada – motores para arranque estrela-triângulo

Se é necessário o arranque estrela-triângulo, os fios condutores devem ser ligados conforme mostra a fig. 15.

Se é necessário o arranque directo, os fios condutores devem ser ligados conforme mostra a fig. 16.

Verificar o sentido de rotação conforme se descreve na secção *4.7.1 Verificação do sentido de rotação*.

4.7.5 Motores Franklin, Mercury e Pleuger

A ligação dos motores Franklin, Mercury e Pleuger está descrita na secção *4.7.4 Ligação de cabos não identificados*.

P

5. Instalação da bomba

Antes de começar a trabalhar na bomba ou no motor, verificar se a alimentação eléctrica está desligada e não pode ser ligada acidentalmente.

5.1 Montagem do motor na bomba

Quando a bomba e o motor forem fornecidos separadamente (bombas comprimidas), monte o motor na bomba como se descreve a seguir:

1. Use barras como grampos quando manusear a bomba.
2. Coloque o motor na posição vertical com os parafusos de fixação voltados para cima, ver fig. 18.

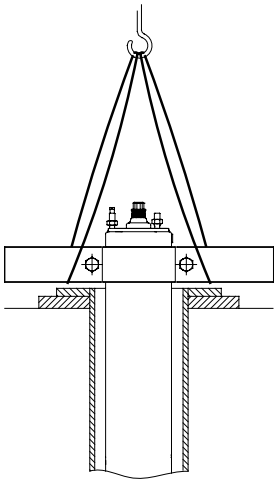

TM00 5259 2402

Fig. 18 Motor na posição vertical

3. Eleve a parte da bomba através de estropos (cabos fortes) presos às barras extensoras, ver fig. 19.

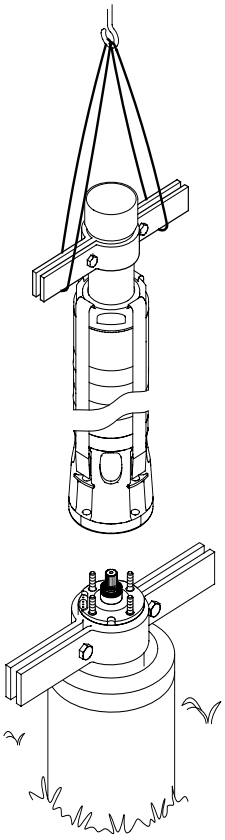

TM02 5263 2502

Fig. 19 Elevar a bomba para a posição

4. Coloque a bomba no topo do motor.
5. Insira nos parafusos e aperte, veja a tabela abaixo.

Os parafusos e buchas que fixam as tiras à bomba devem ser apertados em cruz com as tensões indicadas no quadro seguinte:

Tiras Parafuso/bucha	Tensão [Nm]
M8	18
M10	35
M12	45
M16	120
SP 215, 50 Hz, com mais de 8 etapas SP 215, 60 Hz, com mais de 5 etapas	150

Nota: Verificar se o acoplamento da bomba e motor está correcto.

Quando acoplar o motor à parte hidraúlica, as porcas de fixação têm de ser apertadas em cruz com as tensões indicadas no quadro seguinte:

Bomba/motor Diâmetro dos pernos de ligação	Tensão [Nm]
M8	18
M12	70
M16	150
M20	280

Nota: Verificar se as câmaras da bomba estão alinhadas depois de terminada a montagem.

5.2 Retirar e colocar a protecção de cabos

Para retirar e colocar a protecção de cabo(s), ver páginas 150 e 151.

Se a protecção do cabo está aparafusada à bomba, como no caso das bombas SP 215 e das bombas com camisa, a protecção do cabo deve ser retirada e aplicada usando parafusos.

Nota: Verificar se as câmaras da bomba estão alinhadas depois de terminada a montagem da protecção do cabo.

5.3 Ligar o cabo de alimentação

5.3.1 Motores submersíveis Grundfos

Antes de ligar o cabo de alimentação ao motor, certificar se a tomada do cabo está limpa e seca.

Para facilitar a ligação do cabo, lubrificar as peças em borracha da ficha do cabo com massa de silício não-condutora.

Apertar os parafusos segurando o cabo até às tensões indicadas:

MS 402: 2,0 Nm.
MS 4000: 2,0 Nm.
MS 6000: 4,0-5,0 Nm.
MMS 6000: 10 Nm.
MMS 12000: 15 Nm.

5.4 Tubo de elevação

Se uma chave de corrente fôr utilizada quando da montagem do tubo à bomba, apenas a câmara de descarga deverá ser segura nesta operação.

As uniões roscadas do tubo de elevação devem ser de boa qualidade e bem apertadas para assegurar que não se vão soltar quando sujeitas a tensões causadas pela paragem e arranque da bomba.

A extremidade roscada da primeira secção do tubo de elevação que vai ser apertada à bomba não deve ser maior do que a rosca da bomba.

Se existe a possibilidade de transmitir ruído ao edifício através da tubagem, recomenda-se a utilização de tubos em plástico.

Nota: Os tubos em plástico só devem ser utilizados nas bombas de 4".

P

Se são utilizados tubos em plástico, fixar a bomba com um cabo de aço apertado à câmara de descarga da bomba, ver fig. 20.

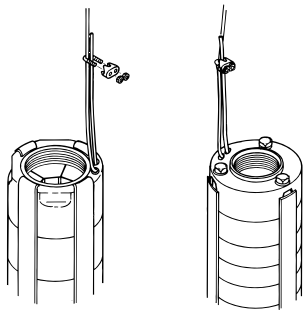

Fig. 20 Fixação do cabo de aço de suspensão

Na ligação de tubos em plástico, deve utilizar-se uma junta de compressão entre a bomba e a primeira secção do tubo.

Quando são utilizados tubos flangeados, as flanges devem ser adequadas para receber o cabo de alimentação e uma mangueira para o indicador de nível, se instalado.

5.5 Profundidade máxima da instalação abaixo do nível da água

Grundfos MS 402: 150 m.
Grundfos MS 4000: 600 m.
Grundfos MS 6000: 600 m.
Grundfos MMS: 250 m.
Motores Franklin: 350 m.
Motores Mercury: 350 m.
Motores Pleuger: 350 m.

5.6 Montagem dos cabos

Aplicar abraçadeiras para fixação dos cabos em cada 3 m para manter os cabos de alimentação e de aço, se montado, no tubo de elevação da bomba.

A Grundfos fornece kits de abraçadeiras para cabos, a pedido. O kit consiste numa fita de borracha com 1,5 mm e 16 botões.

Fixação do cabo: Cortar a banda de borracha de forma que a parte sem ranhura fique tão longa quanto possível.
Inserir um botão na primeira ranhura.
Colocar o cabo de aço ao longo do cabo de alimentação, fig. 21.

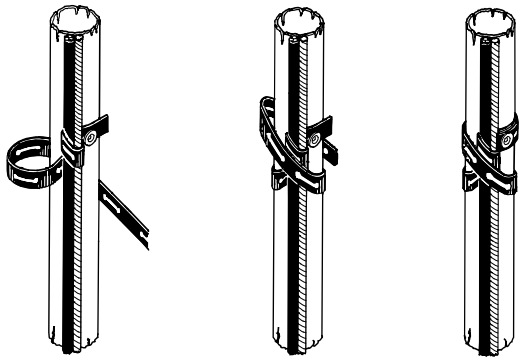

Fig. 21 Fixar o cabo à tubagem

Enrolar a banda uma vez à volta do cabo de aço e outra à volta do cabo de alimentação.
A seguir enrolá-la de forma apertada pelo menos duas vezes à volta do tubo, do cabo de aço e do cabo de alimentação.
Pressionar a ranhura sobre o botão e depois cortar a banda.

Quando são utilizadas secções de cabo elevadas, é necessário enrolar a banda várias vezes.

Quando são utilizados tubos em plástico, deve ser deixada uma folga nos cabos entre cada abraçadeira já que os tubos dilatam quando em carga.

Quando são utilizados tubos flangeados, as abraçadeiras para cabo devem ser colocadas por cima e por baixo de cada junta.

5.7 Baixar a bomba no furo

Verificar o furo com um calibrador antes de colocar a bomba para assegurar que o furo não tem qualquer obstrução.

Colocar cuidadosamente a bomba no furo para não danificar o cabo do motor e o cabo de alimentação.

Nota: Não colocar ou retirar a bomba através do cabo do motor.

5.8 Profundidade da instalação

O nível dinâmico da água deverá estar sempre acima do filtro de aspiração da bomba, ver secção *3.2 Condições de instalação* e fig. 22.

A pressão mínima de aspiração está indicada na curva do NPSH da bomba.
A margem de segurança mínima deveria ser de 1 metro de altura.

A bomba deve ser instalada de forma que o motor fique acima do ralo do furo para permitir um arrefecimento optimizado, conforme secção *3.4 Temperaturas do líquido/Arrefecimento*.

Depois da bomba ter sido instalada à profundidade requerida, deve-se completar a montagem com uma tampa de vedação do furo.

Aliviar o cabo de aço de forma a ficar solto e prendê-lo à tampa de vedação do furo com serracabos.

Nota: Para bombas montadas com tubos em plástico, deve-se ter em conta a dilatação da tubagem cheia de acordo com a profundidade da instalação da bomba.

6. Procedimentos de arranque e operação

6.1 Procedimentos de arranque

Após a bomba ter sido instalada correctamente e estar submersa no líquido a ser bombeado, a bomba deve ser accionada com a válvula de descarga fechada até aprox. 1/3 do volume máximo de água.

Verificar o sentido de rotação conforme se descreve na secção *4.7.1 Verificação do sentido de rotação*.

Se há impurezas na água, a válvula deve ser aberta gradualmente à medida que a água fica mais limpa. Não se deve parar a bomba até a água sair completamente limpa para que as peças no interior da bomba e a válvula de retenção não fiquem obstruídas.

A medida que a válvula é aberta o abaixamento de nível dinâmico da água deve ser verificado para assegurar que a bomba permanece submersa.

O nível dinâmico da água deverá estar sempre acima do filtro de aspiração da bomba, ver secção *3.2 Condições de instalação* e fig. 22.

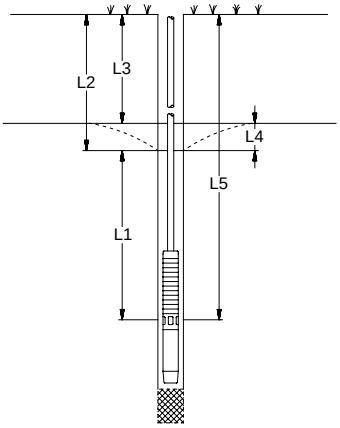

Fig. 22 Comparação dos vários níveis de água

L1: Profundidade mínima de instalação abaixo do nível dinâmico da água. Recomenda-se no mínimo 1 metro.
L2: Profundidade ao nível dinâmico da água.
L3: Profundidade ao nível estático da água.
L4: Descida de nível: É a diferença entre o nível dinâmico e o nível estático da água.
L5: Profundidade de instalação.

P

Se a bomba bombeia mais água do que aquela que o furo pode fornecer, recomenda-se a colocação da unidade de controlo Grundfos tipo MP 204 ou outro tipo de protecção contra funcionamento a seco.

Se não forem instalados eléctrodos ou interruptores de nível de água, o nível da água pode ficar abaixo do filtro de aspiração da bomba e a bomba deixa entrar ar.

Nota: Um funcionamento prolongado com água contendo ar pode danificar a bomba e causar um arrefecimento insuficiente do motor.

6.2 Operação

6.2.1 Caudal mínimo

Para assegurar o arrefecimento necessário do motor, a bomba nunca deve ficar instalada tão profunda que não se obtenha o arrefecimento requerido especificado na secção *3.4 Temperaturas do líquido/Arrefecimento*.

6.2.2 Frequência de arranques/paragens

Tipo motor	Número de arranques
MS 402	Mínimo recomendado 1 por ano. Máximo 100 por hora. Máximo 300 por dia.
MS 4000	Mínimo recomendado 1 por ano. Máximo 100 por hora. Máximo 300 por dia.
MS 6000	Mínimo recomendado 1 por ano. Máximo 30 por hora. Máximo 300 por dia.
MMS 6000	Mínimo recomendado 1 por ano. Máximo 15 por hora. Máximo 360 por dia.
MMS 8000	Mínimo recomendado 1 por ano. Máximo 10 por hora. Máximo 240 por dia.
MMS 10000	Mínimo recomendado 1 por ano. Máximo 8 por hora. Máximo 190 por dia.
MMS 12000	Mínimo recomendado 1 por ano. Máximo 5 por hora. Máximo 120 por dia.
Franklin	Mínimo recomendado 1 por ano. Máximo 100 por dia.
Mercury 6"	Mínimo recomendado 1 por ano. Máximo 20 por hora.
Mercury 8"	Mínimo recomendado 1 por ano. Máximo 15 por hora.
Mercury 10"	Mínimo recomendado 1 por ano. Máximo 10 por hora.
Mercury 12"	Mínimo recomendado 1 por ano. Máximo 6 por hora.
Pleuger	Mínimo recomendado 1 por ano. Máximo 100 por dia.

P

7. Manutenção e assistência

As bombas não necessitam de manutenção.

A assistência das bombas é fácil.

A Grundfos fornece kits de manutenção e ferramentas para assistência às bombas.

As bombas podem ser assistidas em qualquer centro de assistência Grundfos.

Se uma bomba foi utilizada para bombear um líquido prejudicial à saúde ou tóxico, a bomba será classificada como contaminada.

Se a Grundfos for chamada par fazer a assistência da bomba, deve ser informada detalhadamente sobre o líquido bombeado, etc, *antes* da bomba ser entregue. Caso contrário, a Grundfos pode recusar-se a aceitar a bomba para assistência.

Os possíveis custos de devolução da bomba serão suportados pelo cliente.

8. Tabela de análise de avarias

Avaria	Causa	Solução
1. A bomba não funciona.	a) Fusíveis fundidos.	Substituir os fusíveis fundidos. Se os novos também fundirem, verificar a instalação eléctrica e o cabo de alimentação.
	b) Interruptor de defeito dispara.	Armar o interruptor de defeito.
	c) Não há abastecimento eléctrico.	Contactar a empresa abastecedora de electricidade (EDP).
	d) O relé térmico do arrancador disparou.	Ligar de novo o relé térmico do arrancador (automática ou manualmente). Se se desligar outra vez, verificar a tensão. Se a tensão estiver bem, ver items e) - h).
	e) Arrancador/contactor defeituosos.	Substituir o arrancador/contactor.
	f) Arrancador defeituoso.	Reparar/substituir o arrancador.
	g) O circuito de comando foi interrompido ou está defeituoso.	Verificar a instalação eléctrica.
	h) Protecção contra funcionamento a seco desligou o abastecimento eléctrico à bomba devido a um nível de água baixo.	Verificar o nível da água. Se estiver bem, verificar os eléctrodos/interruptor de nível de água.
	i) Bomba/cabo de alimentação defeituosos.	Reparar/substituir a bomba/cabo.
2. A bomba funciona mas não debita água.	a) A válvula de descarga está fechada.	Abrir a válvula.
	b) Não há água ou o nível de água no furo é demasiado baixo.	Ver item 3 a).
	c) A válvula de retenção está bloqueada na posição de fechada.	Retirar a bomba, limpar ou substituir a válvula.
	d) O filtro de admissão está obstruído.	Retirar a bomba e limpar o filtro.
	e) A bomba está defeituosa.	Reparar/substituir a bomba.
3. A bomba funciona com débito reduzido.	a) A descida de nível é maior do que a prevista.	Aumentar a profundidade da instalação da bomba. Reduzir o caudal da bomba (fechar a válvula) ou substituí-la por um modelo mais pequeno para obter capacidade inferior.
	b) Sentido de rotação errado.	Ver secção *4.7.1 Verificação do sentido de rotação*.
	c) As válvulas no tubo de descarga estão fechadas/bloqueadas parcialmente.	Verificar e limpar/substituir as válvulas, se necessário.
	d) O tubo de descarga está parcialmente bloqueado devido a impurezas (carvão).	Limpar/substituir o tubo de descarga.
	e) A válvula de retenção da bomba está parcialmente bloqueada.	Tirar a bomba e verificar/substituir a válvula.
	f) A bomba e o tubo de elevação estão parcialmente bloqueados por impurezas (carvão).	Tirar a bomba. Verificar e limpar ou substituir a bomba se necessário. Limpar os tubos.
	g) A bomba está defeituosa.	Reparar/substituir a bomba.
	h) Fuga na tubagem.	Verificar e reparar os tubos.
	i) Tubagem de elevação defeituosa.	Substituir a tubagem de elevação.
4. Arranques e paragens frequentes.	a) O diferencial do pressostato entre as pressões de arranque e de paragem demasiado baixo.	Aumentar o diferencial. No entanto, a pressão de paragem não deve exceder a pressão de funcionamento do reservatório de pressão, e a de arranque deve ser suficientemente alta para assegurar o abastecimento de água.
	b) Os eléctrodos ou interruptores de nível no reservatório não foram instalados corretamente.	Ajustar os intervalos dos eléctrodos/interruptores de nível para assegurar um espaço de tempo adequado entre o ligar e o desligar da bomba. Ver instruções de instalação e funcionamento dos dispositivos automáticos utilizados. Se os intervalos entre o arranque e paragem não puderem ser alterados nos dispositivos automáticos, a capacidade da bomba pode ser reduzida fechando a válvula de descarga.
	c) Válvula de retenção com fugas ou está presa meio aberta.	Tirar a bomba, e limpar/substituir a válvula de retenção.
	d) O volume de ar no reservatório de pressão de membrana é demasiado baixo.	Ajustar o volume de ar no reservatório depressão de membrana de acordo com as instruções de instalação e funcionamento.
	e) O reservatório de pressão de membrana é demasiado pequeno.	Aumentar a capacidade do reservatório de pressão de membrana substituindo ou complementando-o com outro reservatório.
	f) A membrana do reservatório está deteriorada.	Verificar o reservatório de membrana.

P

9. Verificação do motor e do cabo

1. Tensão de alimentação 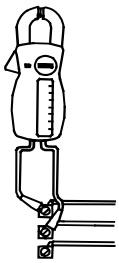 TM00 1371 5092	Medir a tensão entre as fases com um voltímetro. Nos motores monofásicos medir entre a fase e o neutro ou entre as duas fases, dependendo do tipo de abastecimento. Ligar o voltímetro aos terminais no arrancador.	A tensão, quando o motor está em funcionamento, deve estar dentro dos intervalos especificados na secãão *4.1 Geral*. O motor pode queimar se existirem grandes variações de tensão. Grandes variações de tensão indicam fraco abastecimento eléctrico, e a bomba deve ficar parada até a avaria estar solucionada.
2. Consumo de corrente 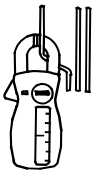 TM00 1372 5092	Medir o consumo eléctrico de cada fase enquanto a bomba está a funcionar a uma altura de descarga constante (se possível a uma capacidade em que o motor está mais carregado). Para a corrente máx. de funcionamento, ver a placa.	Nos motores trifásicos a diferença entre a fase com o consumo mais elevado e a corrente da fase com o consumo mais baixo não deve exceder 5%. Se assim for, ou se a corrente exceder a corrente de funcionamento, existem as seguintes avarias: • Contactos do arrancador fundidos. Substituir os contactos ou a caixa de controlo para funcionamento monofásico. • Mau aperto dos fios condutores possívelmente na junta do cabo. Ver item 3. • Abastecimento de tensão demasiado baixo ou demasiado alto. Ver item 1. • Curtocircuito nos enrolamentos do motor ou estão parcialmente desligados. Ver item 3. • Bomba danificada está a causar sobrecarga no motor. Tirar a bomba para revisão. • Valor da resistência nos enrolamentos do motor está alterado (trifásico). Mudar as fases segundo a sua ordem para uma carga mais uniforme. Se isto não ajudar, ver item 3.
Items 3 e 4: Não é necessário medir quando o abastecimento de tensão e o consumo de corrente são normais.		
3. Resistência dos enrolamentos 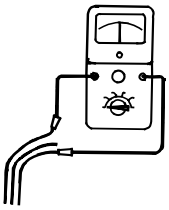 TM00 1373 5092	Desligar o cabo de alimentação no arrancador. Medir a resistência dos enrolamentos entre os fios condutores do cabo de alimentação.	Nos motores trifásicos o desvio entre o valor mais alto e o mais baixo não deve exceder 10%. Se o desvio for superior, tirar a bomba. Medir o motor e o cabo de alimentação separadamente, e reparar/substituir as peças defeituosas. **Nota:** Nos motores monofásicos a 3 fios o enrolamento de operação assume o valor mais baixo de resistência.
4. Resistência do isolamento 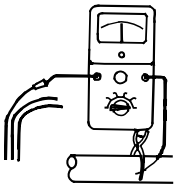 TM00 1374 5092	Desligar o cabo de alimentação no arrancador. Medir a resistência do isolamento de cada fase para a terra (quadro). Verificar se a ligação terra está feita cuidadosamente.	Se a resistência do isolamento é inferior a 0,5 MΩ, a bomba deve ser retirada para reparar o motor ou o cabo. Legislação local pode especificar outros valores para a resistência do isolamento.

10. Eliminação

Este produto ou as suas peças devem ser eliminadas de forma ambientalmente seguras:

1. Utilize o serviço de recolha de desperdícios público ou privado.
2. Se tal não for possível, contacte a Grundfos mais próxima de si ou oficina de reparação.

P

Sujeito a alterações.

ΠΕΡΙΕΧΟΜΕΝΑ

Πριν την εγκατάσταση, διαβάστε τις παρούσες οδηγίες εγκατάστασης και λειτουργίας. Λειτουργία και εγκατάσταση πρέπει να συμφωνούν με τους τοπικούς κανονισμούς και τους παραδεκτούς κανόνες καλής χρήσης.

Οι οδηγίες αυτές εφαρμόζονται στους υποβρύχιους κινητήρες Grundfos τύπου MS και MMS και στις υποβρύχιες αντλίες Grundfos τύπου SP που είναι εφοδιασμένες με υποβρύχιους κινητήρες Grundfos MS ή MMS, Franklin 4"-8", Mercury 6"-12" και Pleuger 6"-12".

Αν η αντλία είναι εφοδιασμένη με κινητήρα διαφορετικό από τον Grundfos MS ή MMS, παρακαλούμε προσέξτε διότι τα οτοιχεία του κινητήρα μπορεί να διαφέρουν από αυτά που παρουσιάζονται στις οδηγίες αυτές.

1. Παράδοση και αποθήκευση

1.1 Παράδοση

Οι υποβρύχιες αντλίες Grundfos παραδίδονται από το εργοστάσιο με κατάλληλη συσκευασία στην οποία πρέπει να παραμείνουν μέχρι την εγκατάσταση.

Φροντίστε να μην κάμπτονται οι αντλίες κατά τη διάρκεια της αποσυσκευασίας και μετά από αυτήν γιατί αυτό μπορεί να προκαλέσει διατάραξη της ευθυγράμμισης.

Σημείωση: Οι αντλίες πρέπει να παραμένουν στη συσκευασία τους μέχρι να τοποθετηθούν κατακόρυφα κατά την εγκατάσταση. Αν η αντλία και ο κινητήρας παραδοθούν ως χωριστές μονάδες (μακριές αντλίες) συνδέστε τον κινητήρα με την αντλία όπως περιγράφεται στο μέρος *5.1 Τοποθέτηση του κινητήρα στην αντλία*.

Σημείωση: Η πινακίδα με τα στοιχεία της αντλίας που τη συνοδεύει πρέπει να τοποθετείται κοντά στο σημείο εγκατάστασης.

Η αντλία δεν πρέπει να εκτίθεται σε κρούσεις και τραντάγματα.

1.2 Αποθήκευση και μεταφορά

Θερμοκρασία αποθήκευσης

Αντλία: από –20°C έως +60°C.
Κινητήρας: από –20°C έως +70°C.

Οι κινητήρες πρέπει να αποθηκεύονται σε κλειστό, ξηρό και καλά εξαεριζόμενο χώρο.

Σημείωση: Αν οι κινητήρες MMS αποθηκευθούν γιά περισσότερο από ένα χρόνο, θα πρέπει να στρέφεται ο άξονας με το χέρι τουλάχιστον μία φορά το μήνα.
Αν ένας κινητήρας έχει αποθηκευθεί γιά περισσότερο από ένα χρόνο πριν την εγκατάστασή του, θα πρέπει να αποσυναρμολογηθούν τα στρεφόμενα μέρη του κινητήρα και να ελεγχθούν πριν από τη χρήση.

Η αντλία δεν πρέπει να εκτίθεται άμεσα στον ήλιο.

Εάν η αντλία έχει αποσυσκευαστεί, πρέπει να αποθηκεύεται σε οριζόντια θέση με κατάλληλη υποστήριξη ή σε κατακόρυφη θέση για την προστασία της ευθυγράμμισής της. Βεβαιωθείτε ότι δεν μπορεί να κυλήσει ή να πέσει. Κατά την αποθήκευση, η αντλία μπορεί να υποστηρίζεται όπως υποδεικνύεται στο σχ. 1.

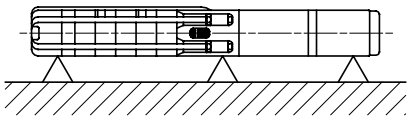

Σχ. 1 Θέση αντλίας κατά την αποθήκευση

1.2.1 Προστασία κατά του παγετού

Εάν η αντλία αποθηκεύεται μετά από χρήση, πρέπει να τοποθετείται σε χώρο που προφυλάσσεται από τον παγετό, ή θα πρέπει να εξασφαλίζεται ότι το υγρό του κινητήρα δεν επηρεάζεται από παγετό.

GR

2. Γενικά χαρακτηριστικά

2.1 Εφαρμογές

Οι υποβρύχιες αντλίες Grundfos, τύπου SP, έχουν σχεδιαστεί για ένα ευρύ φάσμα εφαρμογών παροχής νερού και μεταφοράς υγρών, όπως π.χ. για την παροχή κρύου νερού σε κατοικίες ή υδραγωγεία, για την παροχή νερού σε φυτώρια ή φάρμες, για χαμήλωμα της στάθμης των υπογείων υδάτων και ανύψωση πίεσης, καθώς και για διάφορες βιομηχανικές εφαρμογές.

Βυθίστε τις αντλίες κάτω από την επιφάνεια του νερού κατά την τοποθέτηση. Μπορούν να τοποθετούνται είτε οριζόντια είτε κατακόρυφα, βλ. ωστόσο παράγραφο *3.2 Θέσεις τοποθέτησης*.

2.2 Αντλούμενα υγρά

Καθαρά, λεπτόρευστα, **μη εκρηκτικά** υγρά χωρίς στερεά σωματίδια ή ίνες.

Η μέγιστη περιεκτικότητα άμμου στο νερό δεν πρέπει να ξεπερνά τα 50 g/m^3. Μεγαλύτερη περιεκτικότητα από αυτήν θα ελαττώσει τη διάρκεια ζωής της αντλίας και θα αυξήσει τον κίνδυνο μπλοκαρίσματος.

Σημείωση: Εάν η αντλία χρησιμοποιείται για την άντληση υγρών με πυκνότητα μεγαλύτερη από του νερού, θα πρέπει να χρησιμοποιούνται κινητήρες με αναλογικά υψηλότερες αποδόσεις.

Εάν θέλετε να αντλήσετε υγρά με μεγαλύτερο ιξώδες από αυτό του νερού, παρακαλούμε επικοινωνήστε με την Grundfos.

Οι ειδικοί τύποι SP A N, SP A R, SP N, SP R και SPE έχουν σχεδιαστεί για να δέχονται υγρά που είναι πιο δραστικά από το πόσιμο νερό.

Η μέγιστη θερμοκρασία υγρού αναφέρεται στην παράγραφο *3.4 Θερμοκρασίες υγρών/ψύξη*.

2.3 Στάθμη ηχητικής πίεσης

Η στάθμη ηχητικής πίεσης μπορεί να μετρηθεί σύμφωνα με τους κανόνες που αναφέρονται στην οδηγία 98/37/ΕΚ περί μηχανημάτων της ΕΚ.

Στάθμη ηχητικής πίεσης των αντλιών

Ισχύει γιά αντλίες βυθισμένες σε νερό, χωρίς εξωτερική ρυθμιστική βάνα.

Τύπος αντλίας	$\overline{L}_{pA}$ [dB(A)]
SP 1A	<70
SP 2A	<70
SP 3A	<70
SP 5A	<70
SP 8A	<70
SP 14A	<70
SP 17	<70
SP 30	<70
SP 46	<70
SP 60	<70
SP 77	<70
SP 95	<70
SP 125	79
SP 160	79
SP 215	82

Στάθμη ηχητικής πίεσης κινητήρων

Η στάθμη ηχητικής πίεσης των κινητήρων Grundfos MS ή MMS είναι χαμηλότερη από 70 dB(A).

Για κινητήρες άλλων κατασκευαστών: Βλέπε οδηγίες εγκατάστασης και λειτουργίας για τους κινητήρες αυτούς.

3. Προετοιμασία

GR

Πριν ξεκινήσετε εργασίες στην αντλία, βεβαιωθείτε ότι η ηλεκτρική παροχή είναι κλειστή και δεν μπορεί να ανοιχθεί κατά λάθος.

3.1 Ελεγχος του υγρού του κινητήρα

Οι υποβρύχιοι κινητήρες γεμίζονται από το εργοστάσιο με ένα ειδικό μη δηλητηριώδες υγρό, το οποίο δεν παγώνει μέχρι τους –20°C.

Σημείωση: Η στάθμη του υγρού στον κινητήρα θα πρέπει να ελέγχεται και να συμπληρώνεται εάν χρειάζεται.

Σημείωση: Εάν υπάρχει κίνδυνος παγετού, τότε θα πρέπει να χρησιμοποιείται ειδικό υγρό της Grundfos για το γέμισμα. Διαφορετικά μπορεί να χρησιμοποιείται καθαρό νερό για το ξαναγέμισμα (αλλά **ποτέ** απεσταγμένο).

Η αντικατάσταση του υγρού γίνεται όπως περιγράφεται παρακάτω.

3.1.1 Υποβρύχιοι κινητήρες Grundfos τύπου MS 4000 και MS 402

Η οπή για το γέμισμα του υγρού στον κινητήρα βρίσκεται σε μία από τις ακόλουθες θέσεις:

MS 4000: στην κορυφή του κινητήρα.

MS 402: στο κάτω μέρος του κινητήρα.

1. Τοποθετήστε την υποβρύχια αντλία όπως υποδεικνύεται στο σχ. 2. Ο κοχλίας πλήρωσης θα πρέπει να βρίσκεται στο υψηλότερο σημείο του κινητήρα.
2. Αφαιρέστε το βιδωτό πώμα από το άνοιγμα γεμίσματος.
3. Εγχύστε υγρό μέσα στον κινητήρα από το άνοιγμα με τη βοήθεια σήριγγας γεμίσματος, σχ. 2, μέχρι να αρχίσει να βγαίνει υγρό από το άνοιγμα γεμίσματος.
4. Επανατοποθετήστε το κοχλιωτό πώμα στο άνοιγμα γεμίσματος και σφίξτε το καλά πριν αλλάξετε τη θέση της αντλίας.

Ροπές:

MS 4000: 3,0 Nm.

MS 402: 2,0 Nm.

Η υποβρύχια αντλία είναι τώρα έτοιμη για εγκατάσταση.

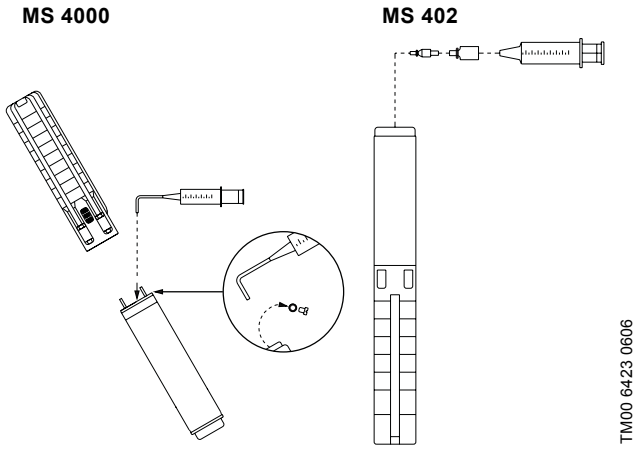

Σχ. 2 Θέση αντλίας κατά την πλήρωση – MS 4000 και MS 402

3.1.2 Υποβρύχιοι κινητήρες Grundfos τύπου MS 6000

- Εάν οι κινητήρες ήταν αποθηκευμένοι, πρέπει να ελεγχθεί η στάθμη του υγρού πριν συνδεθούν με την αντλία, βλέπε σχ. 3.
- Στις αντλίες που παραδίδονται απ' ευθείας από την Grundfos, η στάθμη του υγρού έχει ήδη ελεγχθεί.
- Η στάθμη του υγρού πρέπει να ελέγχεται μετά από εργασίες συντήρησης, βλέπε σχ. 3.

Διαδικασία πλήρωσης:

Η οπή για το γέμισμα του υγρού στον κινητήρα βρίσκεται σε μία από τις ακόλουθες θέσεις στο επάνω μέρος του κινητήρα.

1. Τοποθετήστε την υποβρύχια αντλία όπως υποδεικνύεται στο σχ. 3. Ο κοχλίας πλήρωσης θα πρέπει να βρίσκεται στο υψηλότερο σημείο του κινητήρα.
2. Αφαιρέστε το βιδωτό πώμα από το άνοιγμα γεμίσματος.
3. Εγχύστε υγρό μέσα στον κινητήρα από το άνοιγμα με τη βοήθεια σήριγγας γεμίσματος, σχ. 3, μέχρι να αρχίσει να βγαίνει υγρό από το άνοιγμα γεμίσματος.
4. Επανατοποθετήστε το κοχλιωτό πώμα στο άνοιγμα γεμίσματος και σφίξτε το καλά πριν αλλάξετε τη θέση της αντλίας.

Ροπές: 3,0 Nm.

Η υποβρύχια αντλία είναι τώρα έτοιμη για εγκατάσταση.

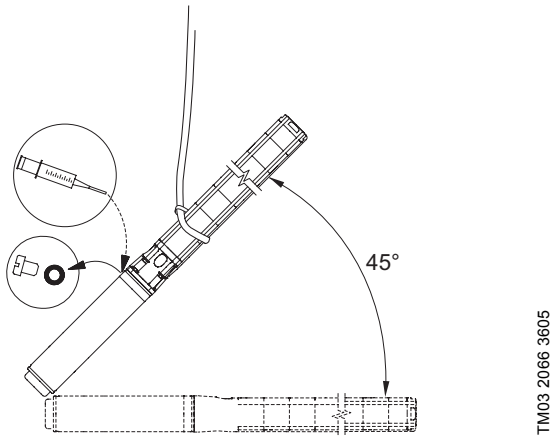

Σχ. 3 Θέση αντλίας κατά την πλήρωση – MS 6000

3.1.3 Υποβρύχιοι κινητήρες Grundfos τύπου MMS 6000, MMS 8000, MMS 10000 και MMS 12000

Διαδικασία πλήρωσης:

1. Τοποθετήστε τον κινητήρα με κλίση 45° με τον άξονα προς τα πάνω, βλέπε σχ. 4.
2. Ξεβιδώστε την τάπα A και βάλτε ένα σωληνάκι στην τρύπα.
3. Γεμίστε με νερό βρύσης τον κινητήρα μέχρι το υγρό του κινητήρα να αρχίσει να βγαίνει από το A.
   Σημείωση: Μη χρησιμοποιείτε υγρό κινητήρα γιατί περιέχει λάδι.
4. Αφαιρέστε το σωληνάκι και ξανατοποθετήστε την τάπα A.

Σημείωση: Πριν συνδέσετε τον κινητήρα σε αντλία μετά από μεγάλη περίοδο αποθήκευσης, να λιπαίνετε το στυπιοθλίπτη του άξονα προσθέτοντας μερικές σταγόνες νερό και περιστρέφοντας τον άξονα.

Η υποβρύχια αντλία είναι τώρα έτοιμη για εγκατάσταση.

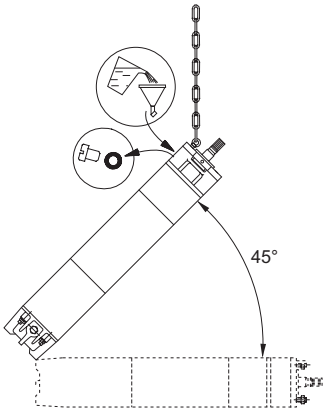

TM03 2065 3605

Σχ. 4 Θέση αντλίας κατά την πλήρωση – MMS

3.1.4 Υποβρύχιοι κινητήρες Franklin για 3 kW και άνω

Η στάθμη του υγρού του κινητήρα στους τύπους υποβρύχιων κινητήρων Franklin 4" και 6" ελέγχεται μετρώντας την απόσταση από το κάτω έλασμα μέχρι το ενσωματωμένο ελαστικό διάφραγμα. Η απόσταση αυτή μπορεί να μετρηθεί εισάγοντας ένα χάρακα ή ένα μικρό μέτρο μέσα στο άνοιγμα μέχρι να αγγίξει το διάφραγμα, σχ. 5.
Σημείωση: Προσέξτε να μην καταστραφεί το διάφραγμα.

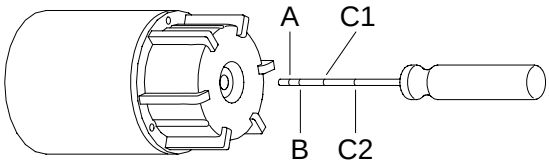

TM00 1353 5092

Σχ. 5 Μέτρηση απόστασης από το έλασμα βάσης ως το διάφραγμα

Ο ακόλουθος πίνακας υποδεικνύει τη σωστή απόσταση από το εξωτερικό μέρος του κάτω ελάσματος μέχρι το διάφραγμα:

Κινητήρας	Διάσταση	Απόσταση
Franklin 4", 0,25 έως 3 kW (βλέπε σχ. 6α)	A	8 mm
Franklin 4", 3 έως 7,5 kW (βλέπε σχ. 6β)	B	16 mm
Franklin 6", 4 έως 45 kW (βλέπε σχ. 6γ)	C1	35 mm
Franklin 6", 4 έως 22 kW (βλέπε σχ. 6δ)	C2	59 mm

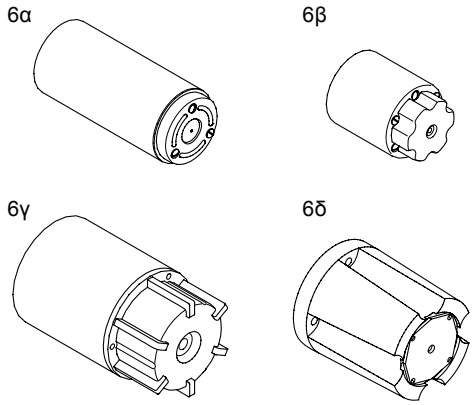

TM00 6422 3695

Σχ. 6 Υποβρύχιοι κινητήρες Franklin

Εάν η απόσταση δεν είναι σωστή, προσαρμόστε τη κατάλληλα όπως περιγράφεται στην παράγραφο *3.1.5 Υποβρύχιοι κινητήρες Franklin*.

3.1.5 Υποβρύχιοι κινητήρες Franklin

Η στάθμη του υγρού του κινητήρα στον τύπο Franklin 8" των υποβρύχιων κινητήρων ελέγχεται ως εξής:

1. Αφαιρέστε το φίλτρο μπροστά στη βαλβίδα στο επάνω μέρος του κινητήρα με ένα κατσαβίδι. Εάν είναι κοχλιωτό, ξεβιδώστε το. Η θέση της βαλβίδας γεμίσματος υποδεικνύεται στο σχ. 7.
2. Πιέστε τη σήριγγα γεμίσματος επάνω στη βαλβίδα και εγχύστε το υγρό, σχ. 7. Εάν ο κώνος της βαλβίδας πιεστεί πολύ μπορεί να προκληθεί διαρροή από τη βαλβίδα λόγω καταστροφής της.
3. Αφαιρέστε όλο τον αέρα από τον κινητήρα πιέζοντας την άκρη της σήριγγας ελαφρά επάνω στη βαλβίδα.
4. Επαναλάβετε τη διαδικασία έγχυσης υγρού και αφαίρεσης του αέρα μέχρι να αρχίσει να τρέχει υγρό έξω ή μέχρι να μπει το διάφραγμα στη σωστή του θέση (Franklin 4" και 6").
5. Επανατοποθετήστε το φίλτρο μετά την αντικατάσταση του υγρού.

Η υποβρύχια αντλία είναι τώρα έτοιμη για εγκατάσταση.

GR

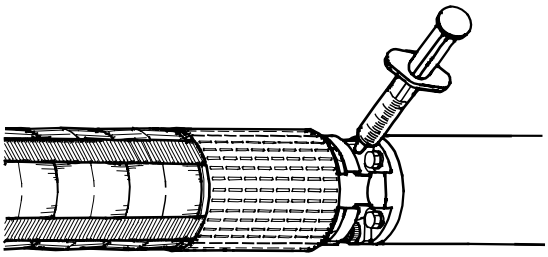

TM00 1354 5092

Σχ. 7 Θέση της βαλβίδας πλήρωσης

3.1.6 Υποβρύχιοι κινητήρες Mercury

Η στάθμη του υγρού στον κινητήρα ελέγχεται όπως περιγράφεται για τους κινητήρες Franklin 8", βλέπε παράγραφο *3.1.5 Υποβρύχιοι κινητήρες Franklin*.

3.1.7 Υποβρύχιοι κινητήρες Pleuger

Η στάθμη του υγρού στον κινητήρα ελέγχεται όπως περιγράφεται για τους κινητήρες Franklin 8", βλέπε παράγραφο *3.1.5 Υποβρύχιοι κινητήρες Franklin*.

3.2 Θέσεις τοποθέτησης

Εάν η αντλία πρόκειται να τοποθετηθεί σε θέση όπου θα υπάρχει πρόσβαση, η σύνδεση θα πρέπει να διαθέτει επαρκή μόνωση για αποφυγή ατυχήματος. Για παράδειγμα, η αντλία μπορεί να τοποθετηθεί σε ένα εξωτερικό χιτώνιο.

Ανάλογα με το μέγεθος του κινητήρα, η αντλία μπορεί να εγκατασταθεί είτε κατακόρυφη είτε οριζόντια. Μία πλήρης λίστα τύπων κινητήρων κατάλληλων γιά οριζόντια εγκατάσταση φαίνεται στο μέρος *3.2.1*.

Αν η αντλία είναι εγκατεστημένη οριζόντια, το στόμιο κατάθλιψης δεν θα **πρέπει ποτέ** να βρεθεί χαμηλότερα από το οριζόντιο επίπεδο, βλέπε σχ. 8.

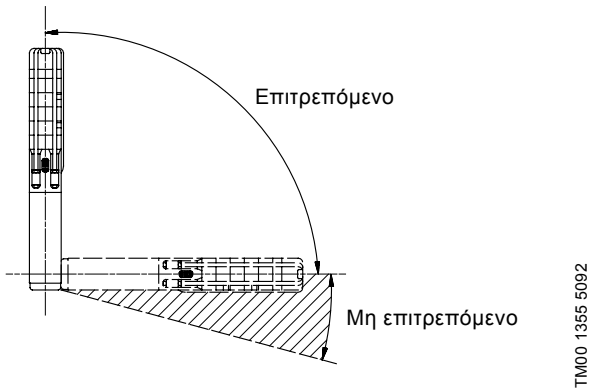

Σχ. 8 Θέσεις τοποθέτησης

Εάν η αντλία τοποθετείται σε οριζόντια θέση, π.χ. σε μια δεξαμενή, θα πρέπει να τοποθετείται σε ένα εξωτερικό χιτώνιο.

3.2.1 Κινητήρες κατάλληλοι γιά οριζόντια εγκατάσταση

Τύπος κινητήρα	Ισχύς 50 Hz	Ισχύς 60 Hz
	[kW]	[kW]
MS	όλα τα μεγέθη	όλα τα μεγέθη
MMS 6000	3,7 έως 18,5	3,7 έως 18,5
MMS 8000	22,0 έως 63,0	22,0 έως 63,0
MMS 10000	75,0 έως 110,0	75,0 έως 110,0
MMS 12000	147,0 έως 190,0	–

Οταν οι υποβρύχιοι κινητήρες Franklin 4" μέχρι και 2,2 kW κάνουν πάνω από 10 εκκινήσεις την ημέρα, συνιστάται η τοποθέτηση του κινητήρα με κλίση τουλάχιστον 15° πάνω από το οριζόντιο επίπεδο, ώστε να ελαχιστοποιείται η φθορά του δίσκου ανάκρουσης.

Σημείωση: Κατά τη διάρκεια της λειτουργίας, το συνδετικό αναρρόφησης της αντλίας πρέπει να είναι πάντα εντελώς βυθισμένο στο υγρό.

Αν η αντλία χρησιμοποιείται γιά άντληση θερμών υγρών (40° ως 60°C), πρέπει να λαμβάνεται πρόνοια, ώστε να μην είναι δυνατή η επαφή ατόμων με την αντλία ή την εγκατάσταση, τοποθετώντας π.χ. έναν προφυλακτήρα.

3.3 Διάμετρος αντλίας/κινητήρα

Η μέγιστη διάμετρος αντλίας/κινητήρα αναφέρεται στον πίνακα της σελίδες 146 και 147.

Συνιστάται ο έλεγχος του ανοίγματος της γεώτρησης με παχύμετρο εσωτερικής διαμέτρου για την εξασφάλιση ελεύθερης διάβασης.

3.4 Θερμοκρασίες υγρών/ψύξη

Η μέγιστη θερμοκρασία υγρού και η ελάχιστη ταχύτητα του υγρού γύρω από τον κινητήρα αναφέρονται στους ακόλουθους πίνακες.

Συνιστάται η εγκατάσταση του κινητήρα επάνω από τα φίλτρα της γεώτρησης για την καλύτερη ψύξη του κινητήρα.

Σημείωση: Σε περίπτωση όπου η αναφερόμενη ταχύτητα του υγρού δεν μπορεί να επιτευχθεί, θα πρέπει να τοποθετηθεί εξωτερικό χιτώνιο.

Εάν υπάρχει οποιοσδήποτε κίνδυνος συγκέντρωσης ιζήματος, π.χ. άμμου, γύρω από τον κινητήρα, θα πρέπει να χρησιμοποιείται εξωτερικό χιτώνιο για την εξασφάλιση της σωστής ψύξης του κινητήρα.

3.4.1 Μέγιστη θερμοκρασία υγρού

Ανεξάρτητα με τα ελαστικά μέρη της αντλίας και του κινητήρα, η θερμοκρασία του υγρού δεν θα πρέπει να υπερβαίνει τους 40°C (περίπου 105°F). Βλέπε επίσης τον ακόλουθο πίνακα.

Η αντλία μπορεί να λειτουργήσει σε θερμοκρασίες υγρού μεταξύ 40 και 60°C (περίπου 105 - 140°F), αρκεί όλα τα ελαστικά μέρη να αντικαθίστανται κάθε τρία χρόνια.

Κινητήρας	Εγκατάσταση		
	Ροή περί τον κινητήρα	Κατακόρυφη	Οριζόντια
Grundfos MS και MMS	**Ελεύθερη μετάδοση 0 m/s**	20°C (~68°F)	Συνιστάται εξωτερικό χιτώνιο
Grundfos MS	**0,15 m/s**	40°C (~105°F)	40°C (~105°F)
Grundfos MS I *	**0,15 m/s**	60°C (~140°F) Συνιστάται εξωτερικό χιτώνιο	60°C (~140°F) Συνιστάται εξωτερικό χιτώνιο
Grundfos MMS	**0,15 m/s**	25°C (~77°F)	25°C (~77°F)
Franklin 4"	**0,08 m/s**	30°C (~85°F)	30°C (~85°F)
Franklin 6" και 8"	**0,16 m/s**	30°C (~85°F)	30°C (~85°F)
Mercury	**0,15 m/s**	25°C (~77°F)	25°C (~77°F)
Pleuger	**0,5 m/s**	30°C (~86°F)	30°C (~86°F)

* Σε μια πίεση περιβάλλοντος τουλάχιστον 1 bar (1 MPa)

Σημείωση: Με τον όρο "ελεύθερη μετάδοση θερμότητας" εννοείται ότι η διάμετρος της γεώτρησης είναι τουλάχιστον 2" ευρύτερη από τη διάμετρο του υποβρύχιου κινητήρα.

Για κινητήρες άλλων κατασκευαστών: Βλέπε προδιαγραφές κινητήρα.

3.5 Σύνδεση σωληνώσεων

Αν υπάρχει φόβος μετάδοσης θορύβου από τις σωληνώσεις σε κτίριο, συνιστάται η χρήση πλαστικών σωλήνων.

Σημείωση: Οι πλαστικοί σωλήνες συνιστώνται μόνο για αντλίες 4".

Εφόσον έχουν χρησιμοποιηθεί πλαστικοί σωλήνες, η αντλία πρέπει να ασφαλίζεται με συρματόσχοινο (όχι τεντωμένο).

Βεβαιωθείτε ότι οι πλαστικοί σωλήνες που πρόκειται να χρησιμοποιηθούν είναι κατάλληλοι για την εκάστοτε θερμοκρασία του υγρού και την πίεση της αντλίας.

Οταν συνδέετε πλαστικούς σωλήνες, θα πρέπει να χρησιμοποιείτε σύνδεση συμπίεσης μεταξύ της αντλίας και του τμήματος του πρώτου σωλήνα.

4. Ηλεκτρικές συνδέσεις

Πριν ξεκινήσετε εργασίες στην αντλία, βεβαιωθείτε ότι η ηλεκτρική παροχή είναι κλειστή και δεν μπορεί να ανοιχθεί κατά λάθος.

4.1 Γενικά

Οι ηλεκτρικές συνδέσεις πρέπει να γίνονται από αδειούχο ηλεκτρολόγο σύμφωνα με τους τοπικούς κανονισμούς.

Η τάση τροφοδοσίας, το μέγιστο επιτρεπτό ρεύμα και το cos φ αναφέρονται στην πινακίδα με τα χαρακτηριστικά που **πρέπει** να τοποθετείται κοντά στο σημείο εγκατάστασης.

Η επιθυμητή τάση για υποβρύχιους κινητήρες Grundfos **MS** και **MMS**, που υπολογίζεται στους ακροδέκτες των κινητήρων, είναι –10%/+6% της ονομαστικής τάσης κατά τη συνεχή λειτουργία (συμπεριλαμβανομένης της διακύμανσης στην τάση παροχής και στις απώλειες των καλωδίων).

GR

Επιπλέον, θα πρέπει να ελέγχεται εάν υπάρχει συμμετρική τάση στις γραμμές παροχής, δηλ. ίδια διαφορά τάσης μεταξύ των χωριστών φάσεων, βλέπε επίσης παράγραφο *9. Ελεγχος του κινητήρα και του καλωδίου*, σημείο 2.

Η αντλία πρέπει να διαθέτει γείωση.

Η αντλία πρέπει να συνδέεται με έναν εξωτερικό διακόπτη δικτύου με ελάχιστο διάκενο επαφών 3 mm σε όλους τους πόλους.

Αν οι κινητήρες Grundfos MS με ενσωματωμένο πομπό θερμοκρασίας (Tempcon) δεν συνδέονται με MP 204 ή παρεμφερή προστασία Grundfos, πρέπει να συνδεθούν με ένα πυκνωτή 0,47 μF, εγκεκριμένο για τριφασική λειτουργία (IEC 384-14), για να καλύπτεται η οδηγία EC EMC (89/336/EEC). Ο πυκνωτής πρέπει να συνδέεται στις δύο φάσεις στις οποίες συνδέεται ο πομπός θερμοκρασίας, βλέπε σχ. 9.

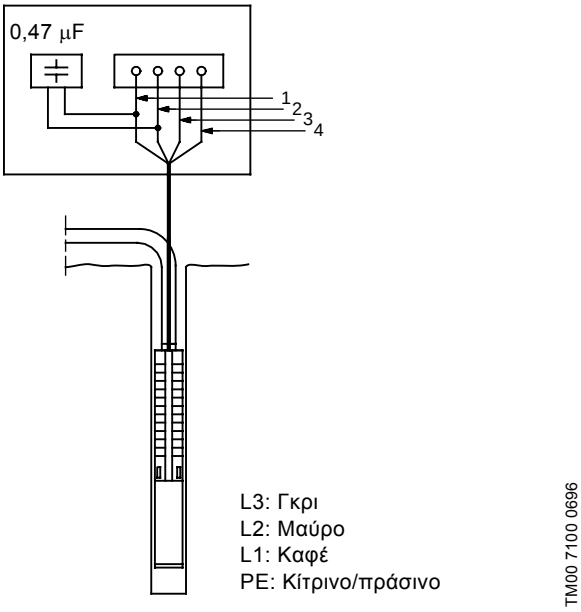

Σχ. 9 Σύνδεση του πυκνωτή

Οι κινητήρες έχουν περιέλιξη για άμεση εκκίνηση κατευθείαν ή για εκκίνηση με αστέρα-τρίγωνο και το ρεύμα εκκίνησης είναι από 4 έως και 6 φορές μεγαλύτερο από το ρεύμα του κινητήρα σε πλήρες φορτίο.

Ο χρόνος ανάκτησης στροφών της αντλίας είναι περίπου 0,1 του δευτερολέπτου. Η άμεση εκκίνηση είναι ως εκ τούτου αποδεκτή από τις αρμόδιες υπηρεσίες ηλεκτροδότησης.

4.1.1 Λειτουργία μετατροπέα συχνότητας

Κινητήρες Grundfos

Οι τριφασικοί κινητήρες Grundfos μπορούν να συνδεθούν σε μετατροπέα συχνότητας.

Σημείωση: Αν συνδεθεί σε μετατροπέα συχνότητας ένας ηλεκτροκινητήρας Grundfos MS με αισθητήρα θερμοκρασίας, θα καεί μιά ασφάλεια που υπάρχει στον αισθητήρα και θα τον απενεργοποιήσει. Ο αισθητήρας δεν μπορεί να επανενεργοποιηθεί. Αυτό σημαίνει ότι, ο ηλεκτροκινητήρας θα λειτουργεί σαν απλός κινητήρας χωρίς αισθητήρα.

Αν απαιτείται αισθητήριο θερμοκρασίας, μπορεί να παραγγελθεί στην Grundfos ένα αισθητήριο Pt100 γιά τοποθέτηση στον υποβρύχιο κινητήρα.

Κατά τη λειτουργία του μετατροπέα συχνότητας, δεν συνιστάται η λειτουργία του κινητήρα σε συχνότητα υψηλότερη από την ονομαστική (50 ή 60 Hz). Σε συνδυασμό με τη λειτουργία της αντλίας, είναι σημαντικό να μην μειώνεται ποτέ η συχνότητα (και κατά συνέπεια η ταχύτητα) σε επίπεδο τέτοιο ώστε η απαραίτητη παροχή του ψυκτικού υγρού που περνά από τον κινητήρα να μην εξασφαλίζεται πλέον.

Για την αποφυγή καταστροφής της αντλίας, θα πρέπει να εξασφαλίζεται η παύση λειτουργίας του κινητήρα μόλις η παροχή της αντλίας πέσει κάτω από το 0,1 της ονομαστικής παροχής.

Ανάλογα με τον τύπο του μετατροπέα συχνότητας, ενδέχεται να εκτεθεί ο κινητήρας σε επιβλαβείς αιχμές τάσεις.

Κινητήρες τύπου MS 402, για τάσεις τροφοδοσίας μέχρι και 440 V (βλ. πινακίδα κινητήρα) πρέπει να προστατεύονται από αιχμές τάσεις υψηλότερες από 650 V (ακραία τιμή) μεταξύ των τερματικών τροφοδοσίας.

Συνιστάται η προστασία των άλλων τύπων κινητήρα από ακραίες τάσεις υψηλότερες από 850 V.

Το παραπάνω πρόβλημα μπορεί να αντιμετωπισθεί με την παρεμβολή ενός **φίλτρου RC** μεταξύ μετατροπέα συχνότητας και κινητήρα.

Πιθανή αύξηση θορύβου από τον ηλεκτροκινητήρα μπορεί να αντιμετωπισθεί με την τοποθέτηση ενός **φίλτρου LC**, το οποίο επίσης θα περιορίσει τις αιχμές τάσης από τον μετατροπέα συχνότητας.

Για περισσότερες λεπτομέρειες, παρακαλούμε επικοινωνήστε με τον προμηθευτή του μετατροπέα συχνότητας ή την Grundfos.

Κινητήρες άλλων κατασκευαστών εκτός της Grundfos

Παρακαλούμε επικοινωνήστε με την Grundfos ή με τον κατασκευαστή του κινητήρα.

4.2 Προστασία κινητήρα

4.2.1 Μονοφασικοί κινητήρες

Οι μονοφασικοί υποβρύχιοι κινητήρες, τύπου MS 402, διαθέτουν ενσωματωμένο θερμικό διακόπτη κι επομένως δεν απαιτείται επιπλέον προστασία του κινητήρα.

Οταν ο κινητήρας έχει διακοπεί θερμικά, οι ακροδέκτες του λειτουργούν ακόμα.
Αφού ο κινητήρας ψυχθεί επαρκώς, επανεκκινεί αυτόματα.

Οι μονοφασικοί υποβρύχιοι κινητήρες, τύπου MS 4000 πρέπει να προστατεύονται. Μια προστατευτική διάταξη μπορεί είτε να ενσωματωθεί στον πίνακα ελέγχου είτε να τοποθετηθεί χωριστά.

Οι κινητήρες Franklin 4" PSC πρέπει να συνδέονται με εκκινητή.

4.2.2 Τριφασικοί κινητήρες

Οι κινητήρες **MS** της Grundfos διατίθενται με ή χωρίς ενσωματωμένο αισθητήριο θερμοκρασίας.

Κινητήρες **με** ενσωματωμένο αισθητήριο θερμοκρασίας λειτουργίας πρέπει να προστατεύονται μέσω:

- ενός εκκινητή κινητήρα με θερμικό διακόπτη ή
- ενός MTP 75 και ενός εκκινητή κινητήρα με θερμικό διακόπτη ή
- ενός MP 204 και ρελέ.

Κινητήρες **χωρίς** το παραπάνω αισθητήριο ή **με** αισθητήριο θερμοκρασίας όχι όμως λειτουργίας, πρέπει να προστατεύονται μέσω:

- ενός εκκινητή κινητήρα με θερμικό διακόπτη ή
- ενός MP 204 και ρελέ.

Οι κινητήρες Grundfos **MMS** δεν διαθέτουν ενσωματωμένο αισθητήριο θερμοκρασίας. Ενα αισθητήριο Pt100 διατίθεται κατόπιν παραγγελίας.

Οι κινητήρες **με** αισθητήριο Pt100 πρέπει να προστατεύονται μέσω:

- ενός εκκινητή κινητήρα με θερμικό διακόπτη ή
- ενός MP 204 και ρελέ.

Οι κινητήρες **χωρίς** ένα αισθητήριο Pt100 πρέπει να προστατεύονται μέσω:

- ενός εκκινητή κινητήρα με θερμικό διακόπτη ή
- ενός MP 204 και ρελέ.

4.2.3 Απαιτούμενες ρυθμίσεις του εκκινητή

Για κρύους κινητήρες, ο χρόνος διακοπής του εκκινητή πρέπει να είναι μικρότερος από 10 δευτερόλεπτα στο πενταπλάσιο μέγιστο επιτρεπτό ρεύμα του κινητήρα.

Σημείωση: Εάν δεν τηρούνται αυτοί οι όροι, μπορεί να ακυρωθεί η εγγύηση του κινητήρα.

GR

Για την εξασφάλιση της καλύτερης προστασίας του υποβρύχιου κινητήρα, η μονάδα υπερφόρτωσης του εκκινητή πρέπει να ρυθμίζεται σύμφωνα με τις ακόλουθες οδηγίες:

1. Ρυθμίστε το θερμικό του εκκινητή στο μέγιστο επιτρεπτό ρεύμα του κινητήρα.
2. Θέστε την αντλία σε λειτουργία για μισή ώρα σε κανονική απόδοση.
3. Ρυθμίστε σταδιακά προς τα κάτω το κουμπί του θερμικού μέχρι να γίνει διακοπή.
4. Αυξήστε τη ρύθμιση του θερμικού κατά 5%.

Η μέγιστη επιτρεπόμενη ρύθμιση είναι το μέγιστο επιτρεπτό ρεύμα του κινητήρα.

Για κινητήρες που έχουν συνδεθεί για εκκίνηση αστέρατριγώνου η μονάδα υπερφόρτωσης του εκκινητή πρέπει να ρυθμίζεται όπως προαναφέρθηκε, αλλά η μέγιστη ρύθμιση πρέπει να είναι ως εξής:

Ρύθμιση υπερφόρτωσης εκκινητή = Μέγιστο επιτρεπτό ρεύμα x 0,58.

Ο μέγιστος επιτρεπόμενος χρόνος εκκίνησης για την εκκίνηση αστέρα-τριγώνου ή για εκκίνηση με αυτομετασχηματιστή είναι 2 δευτερόλεπτα.

4.3 Προστασία από κεραυνούς

Η εγκατάσταση μπορεί να εφοδιαστεί με μια ειδική διάταξη προστασίας κατά της υπέρτασης για την προστασία του κινητήρα από μεταβολές της τάσης που μπορούν να προκληθούν στις γραμμές παροχής από κεραυνό, βλ. σχ. 10.

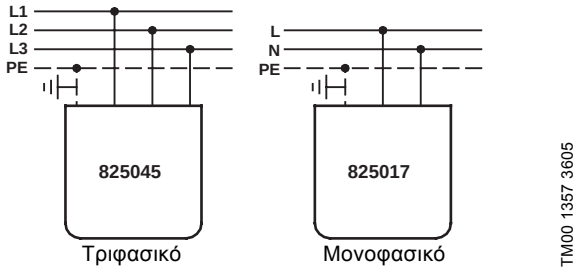

Σχ. 10 Σύνδεση προστασίας υπέρτασης

Η διάταξη προστασίας από την υπέρταση δεν προστατεύει ωστόσο από το κατευθείαν χτύπημα του κεραυνού.

Η διάταξη προστασίας από την υπέρταση πρέπει να συνδέεται στην εγκατάσταση και όσο το δυνατόν πιο κοντά στον κινητήρα και πάντα σύμφωνα με τους τοπικούς κανονισμούς.
Ενημερωθείτε από την Grundfos για τις διατάξεις αντικεραυνικής προστασίας.

Οι υποβρύχιοι κινητήρες, τύπου MS 402, ωστόσο, δεν χρειάζονται επιπλέον αντικεραυνική προστασία γιατί έχουν υψηλή μόνωση.

Ενημερωθείτε σχετικά με το ειδικό εξάρτημα σύνδεσης καλωδίων με ενσωματωμένη διάταξη προστασίας από την υπέρταση για τους υποβρύχιους κινητήρες Grundfos 4" (αριθμός εξαρτήματος 799911 / 799912).

4.4 Διατομές καλωδίων

Βεβαιωθείτε ότι το υποβρύχιο καλώδιο σύνδεσης μπορεί να αντέξει τη μόνιμη βύθιση στο εκάστοτε υγρό και στις εκάστοτε θερμοκρασίες.

Η Grundfos μπορεί να προμηθεύσει υποβρύχια καλώδια για μια ευρεία σειρά τύπων εγκατάστασης.

Η διατομή (q) του καλωδίου πρέπει να ανταποκρίνεται στις ακόλουθες απαιτήσεις:

1. Το υποβρύχιο καλώδιο σύνδεσης πρέπει να έχει διαστάσεις ανάλογες με το μέγιστο επιτρεπτό ρεύμα (I) του κινητήρα.
2. Η διατομή πρέπει να είναι επαρκής ώστε το καλώδιο να προκαλεί αποδεκτή πτώση τάσης.

Χρησιμοποιήστε τις μεγαλύτερες διατομές που βρίσκονται κάτω από τα σημεία 1. και 2.

Αναφ. 1: Ο πίνακας που ακολουθεί προσδιορίζει την επιτρεπτή ένταση των υποβρυχίων καλωδίων σύνδεσης Grundfos (δηλ. το μέγιστο ρεύμα που μπορεί να αντέξει το καλώδιο σύνδεσης) σε θερμοκρασία περιβάλλοντος ως 30°C.
Παρακαλούμε επικοινωνήστε με την Grundfos εάν η θερμοκρασία περιβάλλοντος ξεπερνά τους 30°C.

Οταν προσδιορίζετε το μέγεθος του υποβρυχίου καλωδίου σύνδεσης, βεβαιωθείτε ότι το μέγιστο επιτρεπτό ρεύμα του κινητήρα δεν υπερβαίνει την τιμή του ρεύματος (I_s).

Για την εκκίνηση αστέρα-τριγώνου, ωστόσο, προσδιορίστε το μέγεθος των καλωδίων έτσι ώστε το 0,58 x το ονομαστικό ρεύμα του κινητήρα να μην υπερβαίνει την τιμή μέγιστου ρεύματος (I_s) των καλωδίων.

q [mm^2]	I_s [A]	q [mm^2]	I_s [A]
1,5	18,5	50	153
2,5	25	70	196
4	34	95	238
6	43	120	276
10	60	150	319
16	80	185	364
25	101	240	430
35	126	300	497

Εάν δεν χρησιμοποιούνται τα υποβρύχια καλώδια σύνδεσης Grundfos, η διατομή πρέπει να επιλέγεται βάσει των επιτρεπτών τιμών ρεύματος των εκάστοτε καλωδίων.

Αναφ. 2:
Σημείωση: Η διατομή του υποβρύχιου καλωδίου πρέπει να είναι αρκετά μεγάλη ώστε να ανταποκρίνεται στις απαιτήσεις ποιότητας τάσης που αναφέρονται στην παράγραφο *4.1 Γενικά*.

Προσδιορίστε την πτώση τάσης για την διατομή του υποβρύχιου καλωδίου σύνδεσης με τη βοήθεια των διαγραμμάτων στις σελίδες 148 και 149, όπου

I = Το μέγιστο επιτρεπτό ρεύμα του κινητήρα.
Για εκκίνηση αστέρα-τριγώνου
I = το μέγιστο επιτρεπτό ρεύμα του κινητήρα x 0,58.

Lx = Το μήκος του καλωδίου μετατρεπόμενο σε πτώση τάσης 1% της ονομαστικής τάσης.

$$Lx = \frac{\text{μήκος του καλωδίου σύνδεσης}}{\text{επιτρεπόμενη πτώση τάσης \%}}$$

q = Διατομή του υποβρύχιου καλωδίου σύνδεσης.

Τραβήξτε μιά ευθεία γραμμή ανάμεσα στην πραγματική τιμή I και την τιμή Lx. Στο σημείο όπου η γραμμή τέμνει τον άξονα q, επιλέξτε τη διατομή που βρίσκεται ακριβώς πάνω από την τομή.

Τα διαγράμματα γίνονται βάση των ακόλουθων τύπων:

Μονοφασικός υποβρύχιος κινητήρας

$$L = \frac{U \times \Delta U}{I \times 2 \times 100 \times \left(\cos\varphi \times \frac{\rho}{q} + \sin\varphi \times XI\right)}$$

Τριφασικός υποβρύχιος κινητήρας

$$L = \frac{U \times \Delta U}{I \times 1{,}73 \times 100 \times \left(\cos\varphi \times \frac{\rho}{q} + \sin\varphi \times XI\right)}$$

όπου

L = Μήκος του υποβρυχίου καλωδίου σύνδεσης [m]
U = Ονομαστική τάση [V]
ΔU = Πτώση τάσης [%]
I = Μέγιστο επιτρεπτό ρεύμα του κινητήρα [A]
cos φ = 0,9
ρ = Ειδική αντίσταση: 0,02 [Ωmm^2/m]
q = Διατομή του υποβρυχίου καλωδίου σύνδεσης [mm^2]
sin φ = 0,436
XI = επαγωγική αντίσταση: 0,078 x 10^{-3} [Ω/m]

GR

4.5 Ελεγχος του μονοφασικού MS 402

Ο μονοφασικός υποβρύχιος κινητήρας MS 402 διαθέτει ενσωματωμένη προστασία κινητήρα που διακόπτει τη λειτουργία του σε περίπτωση υπερβολικών θερμοκρασιών περιέλιξης ενώ ο κινητήρας τροφοδοτείται ακόμα με τάση. Αυτό μπορεί να συμβεί όταν ο κινητήρας αποτελεί μέρος ενός συστήματος ελέγχου.

Εάν περιλαμβάνεται συμπιεστής σε σύστημα ελέγχου μαζί με φίλτρο, ο συμπιεστής θα λειτουργεί συνεχώς μόλις διακόψει τον κινητήρα η προστασία του, εκτός αν έχουν ληφθεί άλλες ειδικές προφυλάξεις.

4.6 Σύνδεση μονοφασικών κινητήρων

4.6.1 Κινητήρες δύο Καλωδίων

Οι κινητήρες δύο καλωδίων Grundfos MS 402 διαθέτουν ενσωματωμένη προστασία και διάταξη εκκινητή, κι επομένως μπορούν να συνδεθούν απευθείας με το δίκτυο, βλ. σχ. 11.

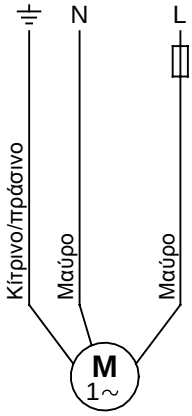

TM00 1358 5092

Σχ. 11 Κινητήρες δύο καλωδίων

4.6.2 Κινητήρες PSC

Οι κινητήρες PSC συνδέονται με το δίκτυο μέσω ενός πυκνωτή ο οποίος πρέπει να είναι κατάλληλα διαστασιολογημένος για συνεχή λειτουργία.

Επιλέξτε το κατάλληλο μέγεθος πυκνωτή βάσει του ακόλουθου πίνακα:

Κινητήρας	Πυκνωτής
0,25 kW	12,5 μF / 400 V / 50 Hz
0,37 kW	16 μF / 400 V / 50 Hz
0,55 kW	20 μF / 400 V / 50 Hz
0,75 kW	30 μF / 400 V / 50 Hz
1,10 kW	40 μF / 400 V / 50 Hz
1,50 kW	50 μF / 400 V / 50 Hz
2,20 kW	75 μF / 400 V / 50 Hz

Ο κινητήρας Grundfos MS 402 PSC διαθέτει ενσωματωμένη προστασία κινητήρα και πρέπει να συνδέεται όπως στο σχ. 12.

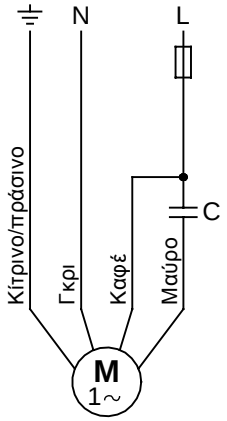

TM00 1359 5092

Σχ. 12 Κινητήρες PSC

Βλέπε www.franklin-electric.com και σχ. 13.

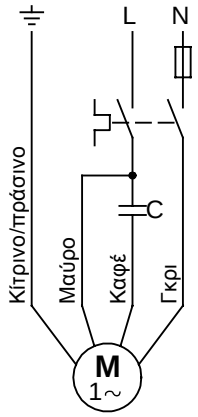

TM00 1361 1200

Σχ. 13 Υποβρύχιοι κινητήρες Franklin

4.6.3 Κινητήρες τριών καλωδίων

Οι κινητήρες τριών καλωδίων **Grundfos MS 4000** πρέπει να συνδέονται με το δίκτυο μέσω ενός κιβωτίου ελέγχου SA-SPM 2 ή 3 με ενσωματωμένη προστασία κινητήρα.

Οι κινητήρες 3 καλωδίων **Grundfos MS 402** διαθέτουν ενσωματωμένη προστασία και πρέπει να συνδέονται με το δίκτυο μέσω ενός κιβωτίου ελέγχου Grundfos SA-SPM 2 ή 3 χωρίς προστασία κινητήρα.

Οι συνδέσεις των MS 4000 και MS 402 εμφανίζονται στον ακόλουθο πίνακα:

Κινητήρας	Καλώδιο	Κιβώτιο ελέγχου	Δίκτυο
Μέχρι 0,75 kW	Γκρι Καφέ Μαύρο Κίτρινο/πράσινο	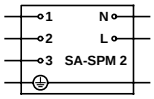	N L PE
Από 1,10 kW	Γκρι Καφέ Μαύρο Κίτρινο/πράσινο	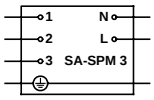	N L PE

4.7 Σύνδεση τριφασικών κινητήρων

Οι υποβρύχιοι τριφασικοί κινητήρες πρέπει να προστατεύονται, βλέπε παράγραφο *4.2.2 Τριφασικοί κινητήρες*.

Για ηλεκτρική σύνδεση μέσω MP 204, παρακαλούμε αναφερθείτε στις ξεχωριστές Οδηγίες Εγκατάστασης και Λειτουργίας για αυτή τη μονάδα.

Οταν χρησιμοποιείται ένας συμβατικός εκκινητής, η ηλεκτρική σύνδεση πρέπει να πραγματοποιηθεί όπως περιγράφεται παρακάτω.

4.7.1 Ελεγχος φοράς περιστροφής

Σημείωση: Η αντλία δεν πρέπει να τίθεται σε λειτουργία μέχρι να βυθιστεί εντελώς στο υγρό το συνδετικό αναρρόφησης.

Αφού η αντλία συνδεθεί με την ηλεκτρική παροχή, ορίστε τη σωστή φορά περιστροφής ως εξής:

1. Εκκινήστε την αντλία και ελέγξτε την ποσότητα νερού και το ύψος.
2. Σταματήστε την αντλία και εναλλάξτε δύο από τις συνδέσεις φάσης.
   Σε περίπτωση κινητήρων με περιέλιξη για εκκίνηση αστέρατριγώνου, εναλλάξτε το U1 με το V1 και το U2 με το V2.
3. Εκκινήστε την αντλία και ελέγξτε την ποσότητα νερού και το ύψος.
4. Σταματήστε την αντλία.
5. Συγκρίνετε τα αποτελέσματα των σημείων 1. και 3. Η σωστή σύνδεση είναι εκείνη που δίνει τη μεγαλύτερη ποσότητα νερού και το μεγαλύτερο ύψος.

GR

4.7.2 Κινητήρες Grundfos, απευθείας εκκίνηση

Η σύνδεση των υποβρύχιων κινητήρων Grundfos με περιέλιξη για απευθείας εκκίνηση απεικονίζεται στον παρακάτω πίνακα και στο σχήμα 14.

Δίκτυα	Καλώδιο/σύνδεση
	Κινητήρες Grundfos 4" και 6"
PE	PE (κίτρινο/πράσινο)
L1	U (καφέ)
L2	V (μαύρο)
L3	W (γκρι)

Ελέγξτε τη φορά περιστροφής όπως περιγράφεται στην παράγραφο *4.7.1 Ελεγχος φοράς περιστροφής*.

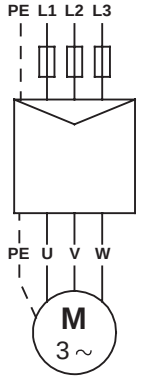

TM03 2099 3705

Σχ. 14 Κινητήρες Grundfos, απευθείας εκκίνηση

4.7.3 Κινητήρες Grundfos, εκκίνηση αστέρα-τριγώνου

Η σύνδεση των υποβρύχιων κινητήρων Grundfos με περιέλιξη για εκκίνηση αστέρα-τριγώνου απεικονίζεται στον παρακάτω πίνακα και στο σχήμα 15.

Σύνδεση	Κινητήρες Grundfos 6"
PE	Κίτρινο/πράσινο
U1	Καφέ
V1	Μαύρο
W1	Γκρι
W2	Καφέ
U2	Μαύρο
V2	Γκρι

Ελέγξτε τη φορά περιστροφής όπως περιγράφεται στην παράγραφο *4.7.1 Ελεγχος φοράς περιστροφής*.

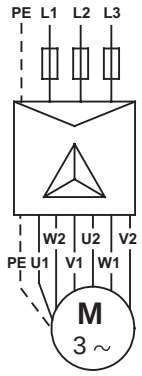

TM03 2100 3705

Σχ. 15 Κινητήρες Grundfos, εκκίνηση αστέρα-τριγώνου

Σε περίπτωση που απαιτείται απευθείας εκκίνηση και όχι εκκίνηση αστέρα-τριγώνου, οι υποβρύχιοι κινητήρες πρέπει να συνδέονται όπως απεικονίζεται στο σχήμα 16.

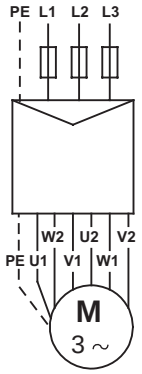

TM03 2101 3705

Σχ. 16 Κινητήρες Grundfos, απευθείας εκκίνηση

4.7.4 Σύνδεση στην περίπτωση μη καθορισμένης σήμανσης καλωδίου/σύνδεσης

Σε περίπτωση που δεν γνωρίζουμε πού πρέπει να συνδεθούν οι μεμονωμένοι αγωγοί στο κεντρικό καλώδιο έτσι ώστε να εξασφαλιστεί η σωστή φορά της περιστροφής, πρέπει να ενεργήσουμε ως εξής:

Περιέλιξη κινητήρων για απευθείας εκκίνηση

Συνδέστε σωστά την αντλία με το δίκτυο.

Στη συνέχεια ελέγξτε τη φορά περιστροφής όπως περιγράφεται στην παράγραφο *4.7.1 Ελεγχος φοράς περιστροφής*.

Περιέλιξη κινητήρων για εκκίνηση αστέρα-τριγώνου

Οι περιελίξεις του κινητήρα καθορίζονται με τη βοήθεια ενός ωμομέτρου και τα ζεύγη άκρων για τις μεμονωμένες περιελίξεις ονομάζονται αντίστοιχα : U1-U2, V1-V2 και W1-W2, βλέπε σχήμα 17.

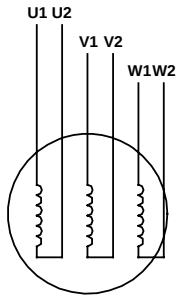

TM00 1367 5092

Σχ. 17 Μη αναγνωρίσιμη σήμανση καλωδίων – κινητήρες περιελλιγμένοι για αστέρα-τρίγωνο

Σε περίπτωση που απαιτείται εκκίνηση αστέρα-τριγώνου, οι αγωγοί πρέπει να συνδεθούν όπως απεικονίζεται στο σχήμα 15.

Σε περίπτωση που απαιτείται απευθείας εκκίνηση, οι αγωγοί πρέπει να συνδεθούν όπως απεικονίζεται στο σχήμα 16.

Στη συνέχεια ελέγξτε τη φορά περιστροφής όπως περιγράφεται στην παράγραφο *4.7.1 Ελεγχος φοράς περιστροφής*.

4.7.5 Κινητήρες Franklin, Mercury και Pleuger

Η σύνδεση των κινητήρων Franklin, Mercury και Pleuger περιγράφεται στην παράγραφο με τίτλο *4.7.4 Σύνδεση στην περίπτωση μη καθορισμένης σήμανσης καλωδίου/σύνδεσης*.

5. Εγκατάσταση αντλίας

Πριν ξεκινήσετε οποιαδήποτε εργασία στην αντλία ή στον κινητήρα, βεβαιωθείτε ότι η ηλεκτρική παροχή είναι κλειστή και δεν μπορεί να ανοιχθεί κατά λάθος.

GR

5.1 Τοποθέτηση του κινητήρα στην αντλία

Αν η αντλία και ο κινητήρας παραδοθούν ως χωριστές μονάδες (μακριές αντλίες) συνδέστε τον κινητήρα με την αντλία ως ακολούθως:

1. Χρησιμοποιείστε δαγκάνες σωλήνα όταν μετακινείτε τον κινητήρα.
2. Τοποθετήστε τον κινητήρα κατακόρυφα στην κεφαλή της γεώτρησης, βλέπε σχ. 18.

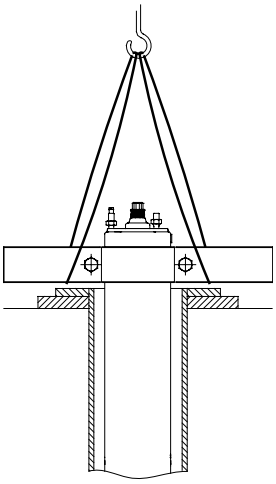

TM00 5259 2402

Σχ. 18 Κινητήρας σε κατακόρυφη θέση

3. Σηκώστε το κομμάτι της αντλίας με δαγκάνες σωλήνα τοποθετημένες στον σωλήνα προέκτασης της κατάθλιψης, βλέπε σχ. 19.

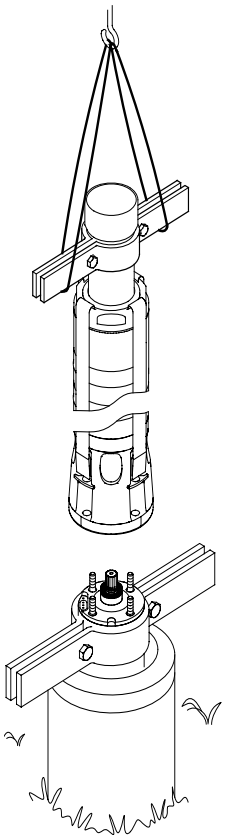

TM02 5263 2502

Σχ. 19 Σήκωμα της αντλίας στη θέση της

4. Τοποθετήστε το κομμάτι της αντλίας επάνω στον κινητήρα.
5. Τοποθετήστε και σφίξτε τα περικόχλια, σύμφωνα με τον ακόλουθο πίνακα.

Οι κοχλίες και τα περικόχλια που ασφαλίζουν Ονομαστικό ρεύμα [A]τους ιμάντες στην αντλία πρέπει να σφίγγονται διαγώνια με τις ροπές που αναφέρονται στον ακόλουθο πίνακα:

Τιράντες Κοχλίας/περικόχλιο	Ροπή [Nm]
M8	18
M10	35
M12	45
M16	120
SP 215, 50 Hz, με περισσότερα από 8 στάδια SP 215, 60 Hz, με περισσότερα από 5 στάδια	150

Σημείωση: Βεβαιωθείτε ότι η σύνδεση μεταξύ της αντλίας και του κινητήρα είναι σωστή.

Όταν συνδέετε τον κινητήρα με την αντλία, τα περικόχλια πρέπει να σφιχθούν διαγώνια με τις ροπές που αναφέρονται στον ακόλουθο πίνακα:

Αντλία/κινητήρας Διάμετρος τιρόντας	Ροπή [Nm]
M8	18
M12	70
M16	150
M20	280

Σημείωση: Βεβαιωθείτε ότι οι βαθμίδες της αντλίας είναι ευθυγραμμισμένες στο τέλος της συναρμολόγησης.

5.2 Αφαίρεση και τοποθέτηση του προστατευτικού καλύμματος καλωδίου

Για την αφαίρεση και την τοποθέτηση του(ων) προστατευτικού(ών) καλύμματος(ων) καλωδίου, αναφερθείτε στις σελίδες 150 έως 151.

Σε περίπτωση που το προστατευτικό κάλυμμα καλωδίου είναι βιδωμένο στην αντλία, όπως στο μοντέλο SP 215 και στις αντλίες με χιτώνιο, το κάλυμμα καλωδίου πρέπει να αφαιρείται και να τοποθετείται με τη βοήθεια βιδών.

Σημείωση: Βεβαιωθείτε ότι οι βαθμίδες της αντλίας είναι ευθυγραμμισμένες αφού έχει τοποθετηθεί ο προφυλακτήρας του καλωδίου.

5.3 Στήριξη του υποβρύχιου καλωδίου

5.3.1 Υποβρύχιοι κινητήρες Grundfos

Πριν συνδέσετε το υποβρύχιο καλώδιο στον κινητήρα, βεβαιωθείτε ότι η υποδοχή καλωδίου είναι στεγνή και καθαρή.

Για πιο εύκολη σύνδεση του καλωδίου, λιπάνετε τα ελαστικά μέρη του φις του καλωδίου με μη αγώγιμη πάστα σιλικόνης.

Σφίξτε τις βίδες κρατώντας το καλώδιο στις αναφερόμενες ροπές:

MS 402: 2,0 Nm.
MS 4000: 2,0 Nm.
MS 6000: 4,0-5,0 Nm.
MMS 6000: 10 Nm.
MMS 12000: 15 Nm.

5.4 Σωλήνας κατόθλιψης

Αν χρησιμοποιηθεί κάποιο εργαλείο (π.χ. ένα κλειδί αλυσίδας) όταν συνδέεται ο σωλήνας κατάθλιψης στην αντλία, αυτό θα πρέπει να εφαρμοσθεί μόνον επάνω στο θάλαμο κατάθλιψης της αντλίας.

Οι βιδωτοί σύνδεσμοι στον κατακόρυφο σωλήνα πρέπει να είναι σωστά κομμένοι και καλά προσαρμοσμένοι μεταξύ τους έτσι ώστε να μην χαλαρώνουν όταν υπόκεινται σε αντίδραση ροπής στρέψης που προκαλείται από το ξεκίνημα και το σταμάτημα της αντλίας.

Το σπείρωμα του πρώτου τμήματος του σωλήνα κατάθλιψης που θα βιδωθεί στην αντλία δεν πρέπει να είναι μακρύτερο από το σπείρωμα στην αντλία.

Σε περίπτωση που μπορεί να μεταδίδεται θόρυβος σε κτίριο μέσω των σωληνώσεων, συνιστάται η χρησιμοποίηση πλαστικών σωλήνων.

GR

Σημείωση: Οι πλαστικοί σωλήνες συνιστώνται μόνο για αντλίες 4".

Σε περίπτωση που χρησιμοποιούνται πλαστικοί σωλήνες, ασφαλίστε την αντλία με ένα εύκαμπτο συρματόσχοινο που θα προσδεθεί στο θάλαμο κατάθλιψης της αντλίας, βλέπε σχήμα 20.

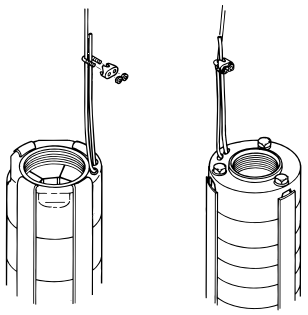

TM00 1368 2298

Σχ. 20 Στερέωση του συρματόσχοινου ανάρτησης

Οταν συνδέετε πλαστικούς σωλήνες, θα πρέπει να χρησιμοποιείτε σύνδεση συμπίεσης μεταξύ της αντλίας και του τμήματος του πρώτου σωλήνα.

Οπου χρησιμοποιούνται φλαντζωτοί σωλήνες, οι φλάντζες πρέπει να διαθέτουν εγκοπή για να μπορεί να προσαρμόζεται το βυθιζόμενο καλώδιο σύνδεσης καθώς και ένας σωλήνας ένδειξης νερού, εάν χωράει.

5.5 Μέγιστο βόθος εγκατόστασης κότω από την επιφόνεια του νερού

Grundfos MS 402:	150 m.
Grundfos MS 4000:	600 m.
Grundfos MS 6000:	600 m.
Grundfos MMS:	250 m.
Κινητήρες Franklin:	350 m.
Κινητήρες Mercury:	350 m.
Κινητήρες Pleuger:	350 m.

GR

5.6 Τοποθέτηση καλωδίου

Στηρίγματα καλωδίου πρέπει να τοποθετούνται ανά 3 μέτρα για να στερεώνουν το βυθιζόμενο καλώδιο σύνδεσης και το εύκαμπτο συρματόσχοινο, εάν υπάρχει, στον κατακόρυφο σωλήνα της αντλίας.

Η Grundfos μπορεί να σας προμηθεύσει στηρίγματα καλωδίου κατόπιν παραγγελίας.

Το σετ αποτελείται από μία ελαστική ζώνη πάχους 1,5 mm και 16 κομβία.

Τοποθέτηση καλωδίου: Κόψτε την ελαστική ζώνη με τέτοιο τρόπο ώστε το κομμάτι χωρίς εγκοπή να γίνει όσο το δυνατό πιο μακρύ.
Τοποθετήστε ένα κομβίο στην πρώτη εγκοπή.
Βάλτε το συρματόσχοινο κατά μήκος του βυθιζόμενου καλώδιου σύνδεσης, σχ. 21.

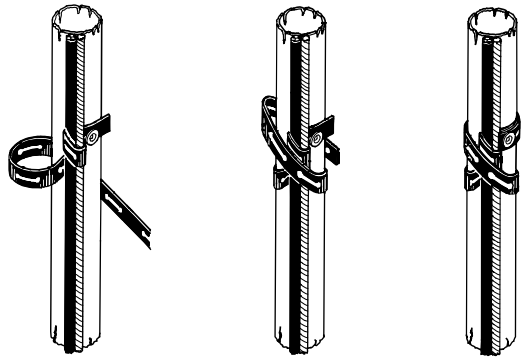

TM00 1369 5092

Σχ. 21 Στερέωση των στηριγμάτων του καλωδίου

Τυλίξτε τη ζώνη μία φορά γύρω από το συρματόσχοινο και το καλώδιο.
Στη συνέχεια τυλίξτε τη σφιχτά τουλάχιστον δύο φορές γύρω από τον σωλήνα, το συρματόσχοινο και το καλώδιο.
Σπρώξτε την εγκοπή πάνω από το κομβίο και μετά κόψτε τη ζώνη.

Οπου χρησιμοποιούνται μεγάλες διατομές καλωδίου, είναι απαραίτητο να τυλίξετε τη ζώνη αρκετές φορές.

Οπου χρησιμοποιούνται πλαστικοί σωλήνες, πρέπει να αφήνεται κάποιο περιθώριο μεταξύ των στηριγμάτων καλωδίου γιατί οι πλαστικοί σωλήνες διαστέλλονται όταν βρίσκονται υπό πίεση.

Οταν χρησιμοποιούνται φλαντζωτοί σωλήνες, τα στηρίγματα του καλωδίου πρέπει να τοποθετούνται πάνω και κάτω από κάθε σύνδεση.

5.7 Κατέβασμα της αντλίας

Συνιστάται να ελέγχετε το άνοιγμα με τη βοήθεια ενός παχυμέτρου [εσωτερικής διαμέτρου] πριν να κατεβάσετε την αντλία για να εξασφαλίσετε ένα ανεμπόδιστο πέρασμα.

Κατεβάστε την αντλία προσεκτικά μέσα στο άνοιγμα, προσέχοντας να μην προξενήσετε ζημιές στο καλώδιο του κινητήρα και στο υποβρύχιο καλώδιο.

Σημείωση: Μην κατεβάσετε ή ανεβάσετε την αντλία μέσω του καλωδίου του κινητήρα.

5.8 Βάθος εγκατάστασης

Η δυναμική στάθμη του νερού πρέπει να βρίσκεται πάντα υψηλότερα από το συνδετικό αναρρόφησης της αντλίας, βλέπε παράγραφο *3.2 Θέσεις τοποθέτησης* και σχήμα 22.

Η ελάχιστη πίεση αναρρόφησης της αντλίας φαίνεται στην καμπύλη NPSH.
Το ελάχιστο περιθώριο ασφαλείας θα πρέπει να είναι 1 m.

Συνιστάται η τοποθέτηση της αντλίας με τέτοιο τρόπο ώστε ο κινητήρας να βρίσκεται σαφώς πάνω από το φίλτρο της γεώτρησης ώστε να εξασφαλίζεται η καλύτερη δυνατή ψύξη, σύμφωνα με την παράγραφο *3.4 Θερμοκρασίες υγρών/ψύξη*.

Οταν η αντλία τοποθετηθεί στο επιθυμητό βάθος, η τοποθέτηση πρέπει να ολοκληρωθεί με την τοποθέτηση ενός καλύμματος της γεώτρησης.

Χαλαρώστε το εύκαμπτο συρματόσχοινο έτσι ώστε να είναι αφόρτιστο και ασφαλείστε το στο κάλυμμα της γεώτρησης με τη βοήθεια σφιγκτήρων συρματόσχοινου.

Σημείωση: Για αντλίες συνδεδεμένες με πλαστικούς σωλήνες, η επιμήκυνση των σωλήνων όταν είναι υπό πίεση θα πρέπει να ληφθεί υπόψη, όταν αποφασίζεται το βάθος της εγκατάστασης της αντλίας.

6. Εκκίνηση και λειτουργία

6.1 Εκκίνηση

Οταν η αντλία έχει συνδεθεί σωστά και είναι βυθισμένη στο προς άντληση υγρό, πρέπει να τεθεί σε λειτουργία με την βάννα κατάθλιψης κλειστή στο 1/3 περίπου της παροχής της.

Ελέγξτε τη φορά περιστροφής όπως περιγράφεται στην παράγραφο *4.7.1 Ελεγχος φοράς περιστροφής*.

Σε περίπτωση που υπάρχουν ακαθαρσίες στο νερό, η βάννα πρέπει να ανοιχτεί σταδιακά καθώς το νερό αρχίζει να καθαρίζει. Η αντλία δεν πρέπει να σταματήσει έως ότου το νερό καθαρίσει τελείως, γιατί στην αντίθετη περίπτωση τα μέρη της αντλίας και η βαλβίδα αντεπιστροφής μπορεί να φράξουν.

Καθώς ανοίγεται η βάννα, το κατέβασμα της στάθμης του νερού πρέπει να ελεγχθεί για να εξασφαλιστεί ότι η αντλία παραμένει πάντα βυθισμένη.

Η δυναμική στάθμη του νερού πρέπει να βρίσκεται πάντοτε υψηλότερα από το συνδετικό αναρρόφησης της αντλίας, βλέπε σχήμα 22 και παράγραφο *3.2 Θέσεις τοποθέτησης*.

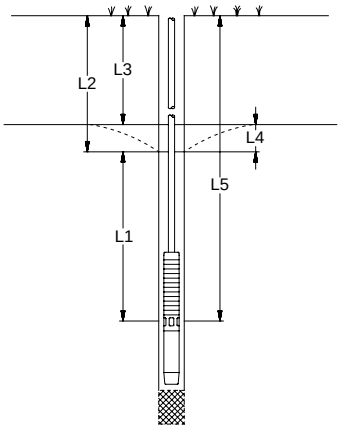

Σχ. 22 Σύγκριση ανάμεσα σε διάφορες στάθμες νερού

L1: Ελάχιστο βάθος τοποθέτησης κάτω από τη δυναμική στάθμη νερού. Συνιστάται 1 μέτρο κατ' ελάχιστο.

L2: Βάθος στη δυναμική στάθμη νερού.

L3: Βάθος στη στατική στάθμη νερού.

L4: Βύθισμα. Αυτή είναι η διαφορά μεταξύ της δυναμικής και της στατικής στάθμης νερού.

L5: Βάθος εγκατάστασης.

Σε περίπτωση που η αντλία μπορεί να αντλήσει περισσότερο από ό,τι αποδίδεται από τη γεώτρηση, συνιστάται να τοποθετηθεί η μονάδα ελέγχου τύπου MP 204 Grundfos ή κάποιος άλλος τύπος προστασίας κατά της λειτουργίας εν ξηρώ.

Σε περίπτωση που δεν έχουν τοποθετηθεί ηλεκτρόδια στάθμης νερού ή διακόπτες στάθμης, η στάθμη νερού μπορεί να κατέβει και να φτάσει το συνδετικό αναρρόφησης της αντλίας και τότε η αντλία θα κάνει αναρρόφηση αέρα.

Σημείωση: Μακρόχρονη λειτουργία με νερό που περιέχει αέρα μπορεί να προκαλέσει βλάβες στην αντλία καθώς και ανεπαρκή ψύξη του κινητήρα.

6.2 Λειτουργία

6.2.1 Ελάχιστη ταχύτητα ροής

Για να εξασφαλιστεί η απαραίτητη ψύξη του κινητήρα, η αντλία δεν πρέπει ποτέ να ρυθμίζεται τόσο χαμηλά ώστε η απαιτούμενη ψύξη που ορίζεται στην παράγραφο *3.4 Θερμοκρασίες υγρών/ψύξη* να μην μπορεί να πραγματοποιηθεί.

6.2.2 Εκκινήσεις/σταματήματα

Τύπος κινητήρα	Αριθμός εκκινήσεων
MS 402	Συνιστάται ελάχιστος 1 το χρόνο. Μέγιστος 100 ανά ώρα. Μέγιστος 300 ανά ημέρα.
MS 4000	Συνιστάται ελάχιστος 1 το χρόνο. Μέγιστος 100 ανά ώρα. Μέγιστος 300 ανά ημέρα.
MS 6000	Συνιστάται ελάχιστος 1 το χρόνο. Μέγιστος 30 ανά ώρα. Μέγιστος 300 ανά ημέρα.
MMS 6000	Συνιστάται ελάχιστος 1 το χρόνο. Μέγιστος 15 ανά ώρα. Μέγιστος 360 ανά ημέρα.
MMS 8000	Συνιστάται ελάχιστος 1 το χρόνο. Μέγιστος 10 ανά ώρα. Μέγιστος 240 ανά ημέρα.
MMS 10000	Συνιστάται ελάχιστος 1 το χρόνο. Μέγιστος 8 ανά ώρα. Μέγιστος 190 ανά ημέρα.
MMS 12000	Συνιστάται ελάχιστος 1 το χρόνο. Μέγιστος 5 ανά ώρα. Μέγιστος 120 ανά ημέρα.
Franklin	Συνιστάται ελάχιστος 1 το χρόνο. Μέγιστος 100 ανά ημέρα.
Mercury 6"	Συνιστάται ελάχιστος 1 το χρόνο. Μέγιστος 20 ανά ώρα.
Mercury 8"	Συνιστάται ελάχιστος 1 το χρόνο. Μέγιστος 15 ανά ώρα.
Mercury 10"	Συνιστάται ελάχιστος 1 το χρόνο. Μέγιστος 10 ανά ώρα.
Mercury 12"	Συνιστάται ελάχιστος 1 το χρόνο. Μέγιστος 6 ανά ώρα.
Pleuger	Συνιστάται ελάχιστος 1 το χρόνο. Μέγιστος 100 ανά ημέρα.

7. Συντήρηση και επισκευή

Οι αντλίες δεν χρειάζονται συντήρηση.

Η επισκευή των αντλιών είναι εύκολη.

Η Grundfos διαθέτει εξαρτήματα καθώς και εργαλεία για την επισκευή.

Στις αντλίες μπορεί να γίνει επισκευή και στο ειδικό παράρτημα της Grundfos.

Εάν η αντλία έχει χρησιμοποιηθεί για υγρό επιβλαβές στην υγεία ή τοξικό, θα πρέπει να χαρακτηρίζεται ως μολυσμένη.

Εάν ζητηθεί από την Grundfos να αναλάβει την επισκευή της αντλίας, θα πρέπει να δοθούν λεπτομέρειες σχετικά με τα αντλούμενα υγρά πριν από το σέρβις. Διαφορετικά η Grundfos μπορεί να μην αποδεχτεί να αναλάβει το σέρβις της αντλίας.

Οι πιθανές δαπάνες επιστροφής της αντλίας στην εταιρεία βαρύνουν τον πελάτη.

GR

8. Πίνακας εντοπισμού προβλημάτων

Πρόβλημα	Αιτία	Αντιμετώπιση
1. Η αντλία δεν λειτουργεί.	a) Οι ασφάλειες έχουν καεί.	Αντικαταστήστε τις καμμένες ασφάλειες. Σε περίπτωση που και οι καινούριες καούν, πρέπει να ελεγχθεί η ηλεκτρική εγκατάσταση καθώς και το βυθιζόμενο καλώδιο σύνδεσης.
	b) Το ρελέ διαρροής δεν λειτουργεί.	Επανατάξτε το διακόπτη.
	c) Δεν υπάρχει παροχή ηλεκτρικού ρεύματος.	Απευθυνθείτε στην υπηρεσία ηλεκτροδότησης.
	d) Η θερμική προστασία του εκκινητή έχει διακόψει.	Επανατάξτε το θερμικό του εκκινητή (αυτόματα ή πιθανώς χειροκίνητα). Εάν παρουσιάσει και πάλι διακοπές, ελέγξτε την τάση. Εάν η τάση είναι σωστή, ελέγξτε τα σημεία e) - h).
	e) Το ρελέ του εκκινητή είναι ελαττωματικό.	Αντικαταστείστε το ρελέ του εκκινητή.
	f) Η διάταξη του εκκινητή είναι ελαττωματική.	Επιδιορθώστε/αντικαταστείστε τη διάταξη εκκίνησης.
	g) Το κύκλωμα ελέγχου έχει διακοπεί ή είναι ελαττωματικό.	Ελέγξτε την ηλεκτρική εγκατάσταση.
	h) Η προστασία λειτουργίας εν ξηρώ έχει διακόψει την παροχή ηλεκτρικού ρεύματος στην αντλία εξαιτίας της χαμηλής στάθμης νερού.	Ελέγξτε τη στάθμη νερού. Εάν είναι σωστή, ελέγξτε τα ηλεκτρόδια/διακόπτη στάθμης.
	i) Η αντλία/βυθιζόμενο καλώδιο σύνδεσης είναι ελαττωματικό.	Επιδιορθώστε/αντικαταστήστε την αντλία/καλώδιο.
2. Η αντλία λειτουργεί, αλλά δεν δίνει νερό.	a) Η βάννα κατάθλιψης είναι κλειστή.	Ανοίξτε τη βάννα.
	b) Δεν υπάρχει καθόλου νερό ή η στάθμη του είναι πολύ χαμηλή στη γεώτρηση.	Βλέπε σημεία 3 a).
	c) Η βαλβίδα αντεπιστροφής έχει κολλήσει στη θέση "Κλειστό".	Βγάλτε την αντλία και καθαρίστε ή αντικαταστήστε τη βαλβίδα.
	d) Το φίλτρο αναρρόφησης έχει φράξει.	Βγάλτε την αντλία και καθαρίστε το φίλτρο.
	e) Η αντλία είναι ελαττωματική.	Επιδιορθώστε/αντικαταστήστε την αντλία.
3. Η αντλία λειτουργεί με μειωμένη παροχή.	a) Η βύθιση είναι μεγαλύτερη από την αναμενόμενη.	Αυξήστε το βάθος τοποθέτησης της αντλίας, ρυθμίστε την αντλία ή αντικαταστήστε την με ένα μικρότερο μοντέλο για να έχετε μικρότερη παροχή.
	b) Λάθος φορά περιστροφής.	Βλέπε παράγραφο *4.7.1 Ελεγχος φοράς περιστροφής*.
	c) Οι βαλβίδες στο σωλήνα κατάθλιψης είναι μερικώς κλειστές/φραγμένες.	Ελέγξτε και καθαρίστε/αντικαταστήστε τις βαλβίδες, εάν χρειάζεται.
	d) Ο σωλήνας κατάθλιψης είναι μερικώς φραγμένος από ακαθαρσίες.	Καθαρίστε/αντικαταστήστε το σωλήνα κατάθλιψης.
	e) Η βαλβίδα αντεπιστροφής της αντλίας είναι μερικώς φραγμένη.	Βγάλτε την αντλία και ελέγξτε/αντικαταστήστε τη βαλβίδα.
	f) Η αντλία και ο κατακόρυφος σωλήνας είναι μερικώς φραγμένοι από ακαθαρσίες.	Βγάλτε την αντλία. Ελέγξτε και καθαρίστε ή αντικαταστήστε την αντλία, εάν χρειάζεται. Καθαρίστε τους σωλήνες
	g) Η αντλία είναι ελαττωματική.	Επιδιορθώστε/αντικαταστήστε την αντλία.
	h) Διαρροή στις σωληνώσεις.	Ελέγξτε και αντικαταστήστε τις σωληνώσεις.
	i) Ο κατακόρυφος σωλήνας είναι ελαττωματικός.	Αντικαταστήστε τον κατακόρυφο σωλήνα.
4. Συχνές εκκινήσεις και στάσεις.	a) Το διαφορικό του πιεζοστάτη μεταξύ των πιέσεων εκκίνησης και στάσης, είναι πολύ μικρό.	Αυξήστε το διαφορικό. Ωστόσο, η πίεση σταματήματος δεν πρέπει να υπερβαίνει την πίεση λειτουργίας του δοχείου μεμβράνης και η πίεση εκκίνησης πρέπει να είναι αρκετά υψηλή ώστε να εξασφαλίζεται επαρκής παροχή νερού.
	b) Τα ηλεκτρόδια στάθμης νερού ή οι διακόπτες στάθμης στη δεξαμενή δεν έχουν τοποθετηθεί σωστά.	Ρυθμίστε τα διαστήματα των ηλεκτροδιών/διακοπτών στάθμης για να εξασφαλίσετε αρκετή διάρκεια μεταξύ των διακοπών της αντλίας. Αναφερθείτε στις Οδηγίες Εγκατάστασης και Λειτουργίας για τις αυτόματες διατάξεις που χρησιμοποιείτε. Σε περίπτωση που τα διαστήματα μεταξύ της εκκίνησης/στάσης δεν μπορούν να αλλαχθούν μέσω των αυτόματων διατάξεων, η παροχή της αντλίας μπορεί να μειωθεί ρυθμίζοντας τη βάννα κατάθλιψης.
	c) Η βαλβίδα αντεπιστροφής παρουσιάζει διαρροή ή έχει κολλήσει σε μισάνοιχτη θέση.	Βγάλτε την αντλία και καθαρίστε/αντικαταστήστε τη βαλβίδα αντεπιστροφής.
	d) Ο όγκος αέρα στο κλειστό δοχείο μεμβράνης είναι πολύ μικρός.	Ρυθμίστε την πίεση του αέρα στο κλειστό δοχείο μεμβράνης σύμφωνα με τις Οδηγίες Εγκατάστασης και Λειτουργίας του.
	e) Το κλειστό δοχείο μεμβράνης είναι πολύ μικρό.	Αυξήστε τη χωρητικότητα του κλειστού δοχείου μεμβράνης αντικαθιστώντας ή συμπληρώνοντας με ένα άλλο.
	f) Η μεμβράνη του δοχείου είναι ελαττωματική.	Ελέγξτε το κλειστό δοχείο μεμβράνης.

GR

9. Ελεγχος του κινητήρα και του καλωδίου

1. Παρεχόμενη τάση 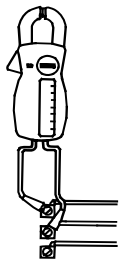 TM00 1371 5092	Μετρήστε την τάση μεταξύ των φάσεων με ένα βολτόμετρο. Σε μονοφασικούς κινητήρες, μετρήστε μεταξύ της φάσης και του ουδέτερου ή μεταξύ δύο φάσεων, ανάλογα με τον τύπο της παροχής. Συνδέστε το βολτόμετρο στα άκρα του εκκινητή.	Η τάση πρέπει, όταν ο κινητήρας είναι φορτωμένος, να κυμαίνεται μεταξύ των τιμών που ορίζονται στην παράγραφο *4.1 Γενικά*. Ο κινητήρας κινδυνεύει να καεί εάν υπάρχουν μεγαλύτερες διακυμάνσεις τάσης. Μεγάλες διακυμάνσεις στην τάση υποδηλώνουν χαμηλή ηλεκτρική παροχή και ή αντλία πρέπει να τεθεί εκτός λειτουργίας μέχρι να διευθετηθεί η βλάβη.
2. Κατανάλωση ρεύματος 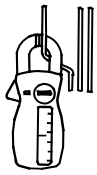 TM00 1372 5092	Μετρήστε τα amps κάθε φάσης ενόσω η αντλία λειτουργεί με ένα σταθερό μανομετρικό κατάθλιψης (εάν είναι δυνατόν, στην παροχή όπου ο κινητήρας είναι περισσότερο φορτωμένος). Για το μέγιστο ρεύμα λειτουργίας αναφερθείτε στην πινακίδα.	Σε τριφασικούς κινητήρες, η διαφορά μεταξύ της φάσης με τηνυψηλότερη κατανάλωση και του ρεύματος στη φάση με τη χαμηλότερη κατανάλωση δεν πρέπει να υπερβαίνει το 5%. Εάν είναι έτσι, ή εάν το ρεύμα υπερβαίνει το ρεύμα πλήρους φορτίου, υπάρχουν τα ακόλουθα πιθανά προβλήματα: • Οι επαφές του εκκινητή έχουν καεί. Αντικαταστήστε τις επαφές ή το κιβώτιο ελέγχου για μονοφασική λειτουργία. • Κακή σύνδεση στα καλώδια, πιθανώς στο σύνδεσμο καλωδίου. Βλέπε σημείο 3. • Πολύ υψηλή ή πολύ χαμηλή τάση ρεύματος. Βλέπε σημείο 1. • Οι περιελίξεις του κινητήρα έχουν βραχυκυκλωθεί ή μερικώς αποσυνδεθεί. Βλέπε σημείο 3. • Κατεστραμμένη αντλία προκαλεί υπερφόρτωση του κινητήρα. Βγάλτε έξω την αντλία και ελέγξτε τη λεπτομερώς. • Η αντίσταση των τυλιγμάτων του κινητήρα αποκλίνει κατά πολύ (τριφασικός). Μετακινείστε τις φάσεις κατά τη σειρά των φάσεων σε μια πιο ομοιόμορφη φόρτιση. Σε περίπτωση που δεν παρουσιαστεί βελτίωση, αναφερθείτε στο σημείο 3.
Σημεία 3 και 4: Η μέτρηση δεν είναι απαραίτητη όταν η τάση και η κατανάλωση ρεύματος είναι κανονικές.		
3. Αντίσταση περιέλιξης 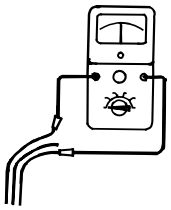 TM00 1373 5092	Αποσυνδέστε το βυθιζόμενο καλώδιο σύνδεσης από τον εκκινητή. Μετρήστε την αντίσταση των τυλιγμάτων μεταξύ των απολήξεων του καλωδίου σύνδεσης.	Για τριφασικούς κινητήρες, η απόκλιση μεταξύ της υψηλότερης και της χαμηλότερης τιμής δεν πρέπει να υπερβαίνει το 10%. Εάν η απόκλιση είναι μεγαλύτερη, βγάλτε την αντλία. Μετρήστε τον κινητήρα, το καλώδιο σύνδεσης και το υποβρύχιο καλώδιο χωριστά και επιδιορθώστε/αντικαταστήστε τα ελαττωματικά μέρη. **Σημείωση:** Σε μονοφασικούς, κινητήρες με τρία καλώδια η κύρια περιέλιξη θα εμφανίσει τη χαμηλότερη τιμή αντίστασης.
4. Αντίσταση μόνωσης 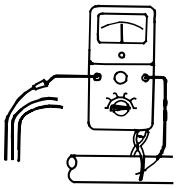 TM00 1374 5092	Αποσυνδέστε το βυθιζόμενο καλώδιο σύνδεσης από τον εκκινητή. Μετρήστε την αντίσταση μόνωσης από κάθε φάση προς τη γείωση (πλαίσιο). Βεβαιωθείτε ότι η γείωση έχει γίνει σωστά.	Εάν η αντίσταση μόνωσης είναι μικρότερη από 0,5 MΩ, η αντλία πρέπει να αφαιρεθεί για επιδιόρθωση κινητήρα ή καλωδίου. Οι τοπικοί κανονισμοί ενδέχεται να ορίζουν διαφορετικές τιμές για την αντίσταση μόνωσης.

10. Απόρριψη

Το προϊόν αυτό και τα εξαρτήματά του θα πρέπει να απορριφθούν με ένα φιλικό προς το περιβάλλον τρόπο:

1. Χρησιμοποιήστε την τοπική δημόσια ή ιδιωτική υπηρεσία συλλογής αποβλήτων.
2. Αν αυτό δεν είναι δυνατό, επικοινωνήστε με την πλησιέστερη εταιρεία Grundfos ή συνεργείο επισκευών.

GR

Υπόκειται σε τροποποιήσεις.

INHOUD

NL

Lees voor installatie deze installatie- en bedieningsinstructies door. De installatie en bediening dienen bovendien volgens de locaal geldende voorschriften en regels plaats te vinden.

Deze instructies zijn van toepassing op de Grundfos-onderwatermotoren, type MS en MMS, en de Grundfos-onderwaterpompen, type SP, alsmede op de volgende onderwatermotoren: Grundfos MS of MMS, Franklin 4"-8", Mercury 6"-12" en Pleuger 6"-12".

Indien de motor geen Grundfos-motor is, kunnen de motorgegevens afwijken van de gegevens die in deze instructies staan vermeld.

1. Aflevering en opslag

1.1 Aflevering

Grundfos-onderwaterpompen worden door de fabriek geleverd in een speciale verpakking. De pompen mogen pas worden uitgepakt wanneer ze geïnstalleerd worden.

Let erop, dat de pompen tijdens en na het uitpakken niet aan buiging worden blootgesteld, omdat ze dan ontzet kunnen raken.

N.B.: De pompen moeten in de verpakking blijven totdat zij tijdens de installatie in de verticale positie zijn gebracht. Wanneer de pomp en motor als losse delen worden geleverd (lange pompen), moet de motor aan de pomp worden gemonteerd zoals beschreven in hoofdstuk *5.1 Bevestigen van de motor aan de pomp*.

N.B.: Het bijgeleverde typeplaatje moet in de directe omgeving van de pomp worden opgehangen.

Stoot de pompen niet en vermijd onnodige schokken.

1.2 Opslag en handling

Opslagtemperatuur

Pomp: –20°C tot +60°C.
Motor: –20°C tot +70°C.

De motoren dienen in een gesloten, droge en goed geventileerde ruimte worden opgeslagen.

N.B.: Indien MMS-motoren voor langer dan een jaar worden opgeslagen, dan dient de as van deze motoren ten minste iedere maand met de hand te worden verdraaid.
Indien de motor, voordat deze wordt geïnstalleerd, langer dan een jaar opgeslagen is geweest, dienen de roterende delen te worden gedemonteerd en gecontroleerd voordat de motor in gebruik wordt genomen.

De pompen mogen niet worden blootgesteld aan direct zonlicht.

Een uitgepakte pomp dient horizontaal (voorzien van de nodige steunen) of verticaal te worden opgeslagen om te voorkomen dat de pomp ontzet raakt. Zorg ervoor dat de pomp niet kan rollen of omvallen. Gedurende de periode van opslag kan de pomp worden ondersteund zoals op afb. 1 is weergegeven.

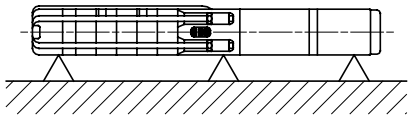

Afb. 1 Pomppositie tijdens opslag

1.2.1 Vorst bescherming

Wanneer de pomp na gebruik wordt opgeslagen, dient dit op een vorstvrije plaats te gebeuren. Opslag op een niet-vorstvrije plaats mag alleen als de gebruikte motorvloeistof vorstbestendig is.

2. Algemene gegevens

2.1 Toepassingen

Grundfos-onderwaterpompen van het type SP zijn ontworpen voor een grote verscheidenheid aan toepassingen op het gebied van watervoorziening en verplaatsing van vloeistoffen. Voorbeelden zijn: de levering van vers water aan particuliere huishoudens en waterleidingbedrijven, de watervoorziening van kwekerijen of boerderijen, verlaging van het grondwaterpeil, drukverhoging en allerlei industriële toepassingen.

Installeer de pomp onder water, in horizontale of verticale positie (zie paragraaf *3.2 Installatie van de pomp* voor nadere gegevens).

2.2 Gepompte vloeistoffen

Dunne, schone, **niet-explosieve** vloeistoffen die geen vaste delen of vezels bevatten.

Het water mag ten hoogste 50 g/m^3 zand bevatten. Een grotere hoeveelheid zand bekort de levensduur van de pomp, terwijl er een verhoogde kans is dat de pomp vastloopt.

N.B.: Voor het pompen van vloeistoffen met een hogere soortelijke massa dan water dienen motoren met een dienovereenkomstig groter vermogen te worden gebruikt.

Neem contact op met Grundfos indien u vloeistoffen met een hogere viscositeit dan water wilt pompen.

De speciale typen SP A N, SP A R, SP N, SP R en SPE zijn ontworpen voor vloeistoffen die agressiever zijn dan drinkwater.

Maximale vloeistoftemperatuur: zie paragraaf *3.4 Vloeistoftemperatuur/koeling*.

2.3 Geluidsdrukniveau

Het geluidsdrukniveau is gemeten overeenkomstig Machinerichtlijn 98/37/EG.

Het geluidsdrukniveau van pompen

Van toepassing op pompen ondergedompeld in water.

Pomptype	$\overline{L}_{pA}$ [dB(A)]
SP 1A	<70
SP 2A	<70
SP 3A	<70
SP 5A	<70
SP 8A	<70
SP 14A	<70
SP 17	<70
SP 30	<70
SP 46	<70
SP 60	<70
SP 77	<70
SP 95	<70
SP 125	79
SP 160	79
SP 215	82

Het geluidsdrukniveau van motoren

Het geluidsdrukniveau van de Grundfos MS- en MMS-motoren is lager dan 70 dB(A).

Voor motoren van andere fabrikaten: Zie de installatie- en bedieningsinstructies van deze motoren.

3. Voorbereiding

Voordat u met werkzaamheden aan de pomp begint, dient u er zeker van te zijn dat de voedingsspanning naar de pomp is afgeschakeld en niet per ongeluk kan worden ingeschakeld.

3.1 Controle van de motorvloeistof

De onderwatermotoren zijn in de fabriek voorzien van een speciale niet-toxische vloeistof, die vorstbestendig is tot –20°C.

N.B.: Controleer het vloeistofpeil van de motor. Indien nodig bijvullen.

N.B.: Bij kans op vorst dient u de motor te voorzien van een speciale Grundfos-vloeistof. In andere gevallen kunt u schoon water gebruiken. Gebruik echter **nooit** gedestilleerd water.

Hoe de vloeistof moet worden bijgevuld, staat hieronder uitgebreid beschreven.

3.1.1 Grundfos onderwatermotoren MS 4000 en MS 402

De vulopening voor de motorvloeistof bevindt zich op de volgende plaats:

MS 4000: in het bovenstuk van de motor.

MS 402: in de bodem van de motor.

1. Zet de onderwaterpomp neer zoals op afb. 2 te zien is. Let op, dat de vulschroef zich op het bovenste punt van de motor bevindt.
2. Verwijder de schroef van de vulopening.
3. Injecteer vloeistof in de motor met behulp van een vulspuit (afb. 2), totdat de vloeistof uit de vulopening loopt.
4. Draai de schroef weer stevig op de vulopening voordat u de pomp verplaatst.

Aanhaalmoment:

MS 4000: 3,0 Nm.

MS 402: 2,0 Nm.

De onderwaterpomp is nu gereed om te worden geïnstalleerd.

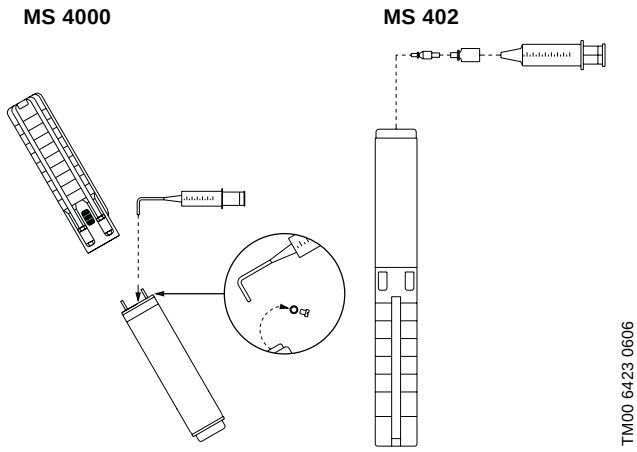

Afb. 2 Pomppositie tijdens het vullen – MS 4000 en MS 402

3.1.2 Grundfos onderwatermotoren MS 6000

- Als de motor apart uit voorraad is geleverd, dan moet het vloeistofpeil worden gecontroleerd voordat deze aan de pomp wordt bevestigd, zie afb. 3.
- Bij pompen door Grundfos geleverd, is het vloeistofpeil al gecontroleerd.
- Tijdens onderhoud moet het vloeistofniveau worden gecontroleerd, zie afb. 3.

Vulprocedure:

De vulopening voor de motorvloeistof bevindt zich aan de bovenzijde van de motor.

1. Zet de onderwaterpomp neer zoals op afb. 3 te zien is. Let op, dat de vulschroef zich op het bovenste punt van de motor bevindt.
2. Verwijder de schroef van de vulopening.
3. Injecteer vloeistof in de motor met behulp van een vulspuit (afb. 3), totdat de vloeistof uit de vulopening loopt.
4. Draai de schroef weer stevig op de vulopening voordat u de pomp verplaatst.

Aanhaalmoment: 3,0 Nm.

De onderwaterpomp is nu gereed om te worden geïnstalleerd.

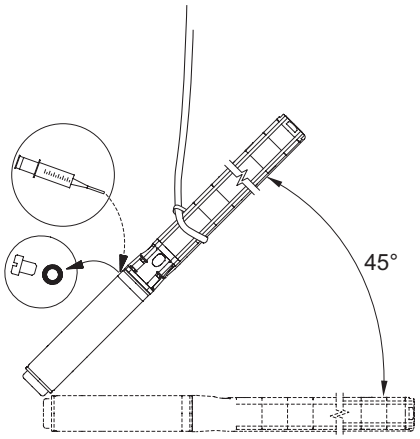

Afb. 3 Pomppositie tijdens het vullen – MS 6000

3.1.3 Grundfos onderwatermotoren MMS 6000, MMS 8000, MMS 10000 en MMS 12000

Vulprocedure:

1. Plaats de motor onder een hoek van 45°, met het bovenstuk van de motor naar boven, zie afb. 4.
2. Draai de stop A los en plaats een trechter in het gat.
3. Giet kraanwater in de motor totdat de motorvloeistof binnenin de motor bij A naar buiten begint te lopen.
   N.B.: Gebruik geen motorvloeistof, omdat deze olie bevat.
4. Verwijder de trechter en plaats de stop A terug.

N.B.: Voordat de motor na een lange periode van opslag aan de pomp wordt bevestigd: smeer de asafdichting door een paar druppels water toe te voegen en de as te draaien.

NL

De onderwaterpomp is nu gereed om te worden geïnstalleerd.

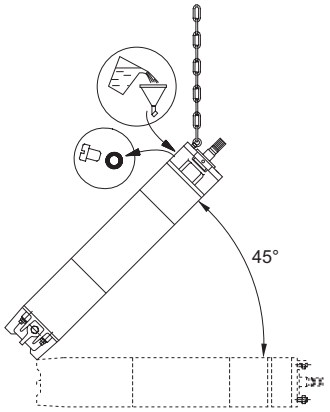

TM03 2065 3605

Afb. 4 Motorpositie tijdens het vullen – MMS

3.1.4 Franklin-onderwatermotoren vanaf 3 kW

Controleer het vloeistofpeil van een Franklin 4" of 6"-onderwatermotor door de afstand van de bodemplaat tot het geïntegreerde rubberen membraan te meten. Steek daartoe een duimstok o.i.d. door de vulopening tot aan het membraan (zie afb. 5).
N.B.: Let erop, dat u hierbij het membraan niet beschadigt!

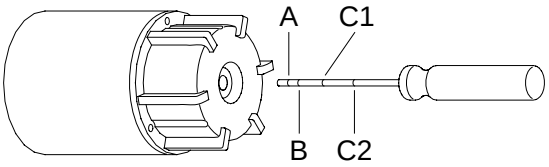

TM00 1353 5092

Afb. 5 Het meten van de afstand van bodemplaat tot membraan

In de onderstaande tabel vindt u de juiste afstand vanaf de buitenzijde van de bodemplaat tot het membraan:

Motor	Formaat	Afstand
Franklin 4", 0,25 tot 3 kW (zie afb. 6a)	A	8 mm
Franklin 4", 3 tot 7,5 kW (zie afb. 6b)	B	16 mm
Franklin 6", 4 tot 45 kW (zie afb. 6c)	C1	35 mm
Franklin 6", 4 tot 22 kW (zie afb. 6d)	C2	59 mm

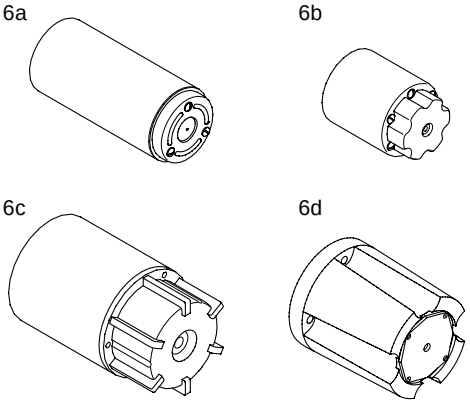

TM00 6422 3695

Afb. 6 Franklin-onderwatermotoren

Is de afstand niet correct, voer dan de handelingen uit die staan omschreven in paragraaf *3.1.5 Franklin-onderwatermotoren*.

3.1.5 Franklin-onderwatermotoren

Controleer het vloeistofpeil van een Franklin 8"-onderwatermotor als volgt:

1. Verwijder met behulp van een schroevedraaier het filter, dat zich voor de klep aan de bovenzijde van de motor bevindt. De positie van de vulklep staat aangegeven in afb. 7.
2. Duw de vulspuit tegen de klep en injecteer de vloeistof (afb. 7). Drukt u de kegelvormige klep te ver naar binnen, dan kan deze beschadigen, zodat de klep gaat lekken.
3. Laat eventuele lucht uit de motor ontsnappen door de punt van de vulspuit licht tegen de klep te duwen.
4. Ga verder met het injecteren van vloeistof en laat net zo lang lucht ontsnappen tot de vloeistof naar buiten loopt of tot het membraan in de juiste positie is gekomen (Franklin 4" en 6").
5. Bent u klaar met bijvullen, breng dan het filter weer op zijn plaats.

De onderwaterpomp is nu gereed om te worden geïnstalleerd.

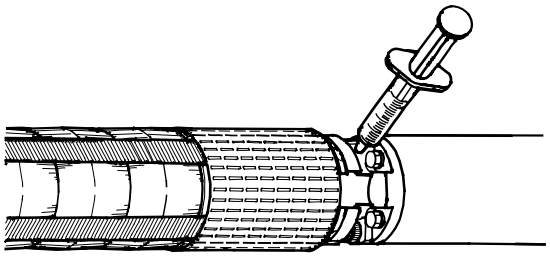

TM00 1354 5092

Afb. 7 Positie van vulklep

3.1.6 Mercury-onderwatermotoren

Controleer het vloeistofpeil van een Mercury-onderwatermotor op dezelfde manier als bij een Franklin 8"-motor (zie paragraaf *3.1.5 Franklin-onderwatermotoren*).

3.1.7 Pleuger-onderwatermotoren

Controleer het vloeistofpeil van een Pleuger-onderwatermotor op dezelfde manier als bij een Franklin 8"-motor (zie paragraaf *3.1.5 Franklin-onderwatermotoren*).

3.2 Installatie van de pomp

Bij pompen die op een gemakkelijk toegankelijke plaats worden geïnstalleerd, moet de koppeling zodanig zijn afgeschermd dat niemand ermee in aanraking kan komen. Een pomp kan daartoe eventueel in een koelmantel worden gemonteerd.

Afhankelijk van het motortype kan de pomp vertikaal of horizontaal worden gemonteerd. Een complete lijst van motoren welke voor horizontale montage geschikt zijn, is weergegeven in paragraaf *3.2.1*.

Indien de pomp horizontaal wordt gemonteerd, mag de pers-opening zich **niet** onder het horizontale vlak van de pomp bevinden, zie afb. 8.

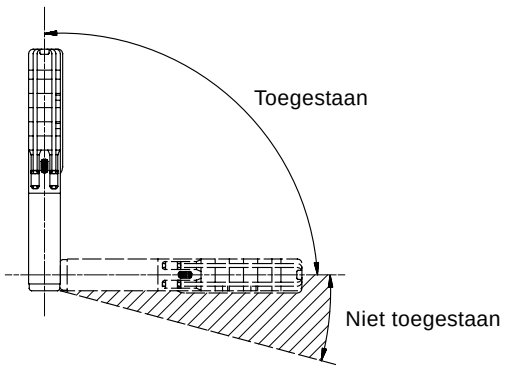

TM00 1355 5092

Afb. 8 Installatie van de pomp

Indien de pomp horizontaal wordt geïnstalleerd (bijv. in een reservoir), dient de pomp bij voorkeur in een koelmantel te worden gemonteerd.

NL

3.2.1 Motoren geschikt voor horizontale montage

Motortype	Uitgangs-vermogen 50 Hz	Uitgangs-vermogen 60 Hz
	[kW]	[kW]
MS	Gehele range	Gehele range
MMS 6000	3,7 tot 18,5	3,7 tot 18,5
MMS 8000	22,0 tot 63,0	22,0 tot 63,0
MMS 10000	75,0 tot 110,0	75,0 tot 111,0
MMS 12000	147,0 tot 190,0	–

Bij Franklin 4"-onderwatermotoren t/m 2,2 kW die vaker dan tienmaal per dag worden gestart, is het raadzaam de motor iets schuin te zetten (ten minste 15° boven het horizontale vlak) om slijtage aan de axiaalschijf zoveel mogelijk te beperken.

N.B.: Terwijl de pomp in bedrijf is, dient het zuigverbindingsstuk van de pomp in de vloeistof ondergedompeld te zijn.

Als de pomp wordt toegepast voor warm water (40°C tot 60°C), dienen voorzieningen getroffen te worden om te voorkomen dat personen in contact komen met de pomp of het leidingwerk, bijv. door het installeren van een beschermkap.

3.3 Diameter van de pomp/motor

De maximale diameter van de pomp/motor kunt u aflezen uit de tabellen op pagina 146 en 147.

Het is raadzaam het boorgat te controleren, zodat u zeker bent dat de doorgang niet is geblokkeerd.

3.4 Vloeistoftemperatuur/koeling

De maximale vloeistoftemperatuur en de minimale vloeistofsnelheid langs de motor kunt u aflezen uit onderstaande tabel.

Installeer de motor bij voorkeur boven de bronwand, zodat een optimale koeling wordt gewaarborgd.

N.B.: Wanneer de vermelde vloeistofsnelheid langs de motor niet voldoende is, dient een koelmantel te worden geïnstalleerd.

Bestaat er gevaar dat zich rond de motor sedimenten afzetten (bijv. zand), dan dient een mantel te worden aangebracht om de vereiste koeling te bewerkstelligen.

3.4.1 Maximale vloeistoftemperatuur

Met het oog op de rubber onderdelen in pomp en motor mag de vloeistoftemperatuur niet hoger zijn dan 40°C (~105°F). Zie ook onderstaande tabel.

Een vloeistoftemperatuur tussen de 40°C en 60°C (~105°F en 140°F) is toegestaan, mits de rubber onderdelen om de drie jaar worden vervangen.

Motor	Installatie		
	Vloeistof-snelheid langs motor	Verticaal	Horizontaal
Grundfos MS en MMS	**Vrije convectie 0 m/s**	20°C (~68°F)	Koelmantel aanbevolen
Grundfos MS	**0,15 m/s**	40°C (~105°F)	40°C (~105°F)
Grundfos MS I *	**0,15 m/s**	60°C (~140°F) Koelmantel aanbevolen	60°C (~140°F) Koelmantel aanbevolen
Grundfos MMS	**0,15 m/s**	25°C (~77°F)	25°C (~77°F)
Franklin 4"	**0,08 m/s**	30°C (~85°F)	30°C (~85°F)
Franklin 6" en 8"	**0,16 m/s**	30°C (~85°F)	30°C (~85°F)
Mercury	**0,15 m/s**	25°C (~77°F)	25°C (~77°F)
Pleuger	**0,5 m/s**	30°C (~86°F)	30°C (~86°F)

* Bij een omgevingsdruk van minimaal 1 bar (1 MPa)

N.B.: Vrije convectie: Boorgatdiameter minimaal 2" groter dan de motordiameter.

Voor motoren van een ander fabrikaat: Zie de desbetreffende motorspecificaties.

3.5 Pijpaansluitingen

Als de kans bestaat dat door de pijpleidingen geluid door het gebouw wordt getransporteerd, is het raadzaam kunststofleidingen te gebruiken.

N.B.: Kunststofleidingen alleen gebruiken bij 4"-pompen.

Wanneer kunststofleidingen worden gebruikt, dient u de pomp te beveiligen met een onbelaste beveiligingskabel.

Vergewis u ervan dat de kunststofleidingen geschikt zijn voor de actuele vloeistoftemperatuur en de pompdruk.

Voor het aansluiten van een pomp op een kunststofleiding dient een flexibele koppeling te worden gebruikt.

4. Elektrische aansluitingen

Voordat u met werkzaamheden aan de pomp begint, dient u er zeker van te zijn dat de voedingsspanning naar de pomp is afgeschakeld en niet per ongeluk kan worden ingeschakeld.

4.1 Algemeen

De elektrische aansluitingen dienen door een gekwalificeerde elektricien volgens de in Nederland/België geldende regels te worden uitgevoerd.

De voedingsspanning, de nominale ingangsstroom en cos φ staan vermeld op het bijgeleverde typeplaatje dat in de directe omgeving van de pomp **moet** worden aangebracht.

De voedingsspannings-tolerantie voor Grundfos **MS-** en **MMS**-onderwatermotoren bedraagt, gemeten aan de motorklemmen, –10%/+6% van de nominale spanning gedurende continubedrijf (variaties in de voedingsspanning en verliezen in de bekabeling inbegrepen).

Verder dient u te controleren of er in de leidingen voor de voedingsspanning spanningssymmetrie bestaat. Dit houdt in dat het spanningsverschil tussen de afzonderlijke fasen gelijk moet zijn (zie ook paragraaf *9. Controleren van motor en kabel*, punt 2).

NL

De pomp dient geaard te zijn.

De pomp dient te zijn aangesloten via een externe netschakelaar met een contactopening van ten minste 3 mm voor alle polen.

Als Grundfos MS motoren met een ingebouwde temperatuuroverbrenger (Tempcon) niet samen met een MP 204 of vergelijkbare Grundfos motorbeveiliging worden geïnstalleerd, moeten ze worden aangesloten op een 0,47 µF condensator die is goedgekeurd voor fase-fase-werking (IEC 384-14), om te voldoen aan de EG EMC-richtlijn (89/336/EEG). De condensator moet worden aangesloten op de twee fasen waaraan de temperatuuroverbrenger is aangesloten, zie afb. 9.

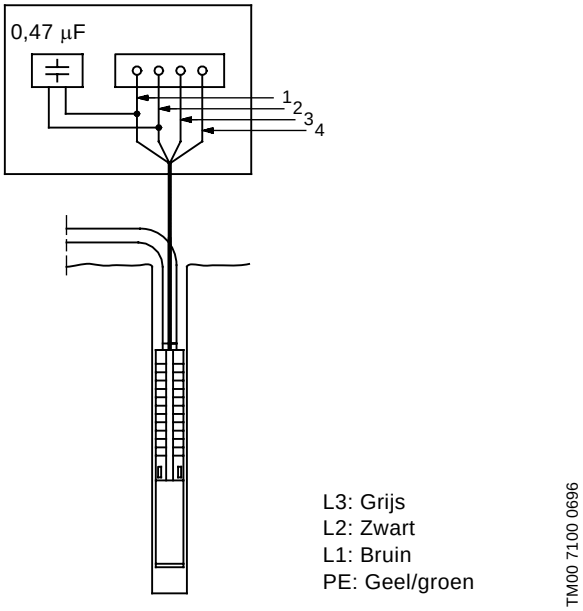

Afb. 9 Aansluiting van condensator

De motoren zijn uitgerust met windingen voor direct inschakelen (standaard) of ster/driehoek-starten en de aanloopstroom bedraagt 4 tot 6 maal de vollaststroom van de motor.

De aanlooptijd van de pompmotor bedraagt slechts 0,1 sec. In het algemeen wordt daarom directe inschakeling goedgekeurd door de elektriciteitsbedrijven.

NL

4.1.1 Gebruik van een frequentie-omvormer

Grundfos-motoren

De Grundfos driefasen motoren kunnen op een frequentie-omvormer worden aangesloten.

N.B.: Als een Grundfos MS-motor met een temperatuuropnemer wordt aangesloten op een frequentie-omvormer, zal een zekering die zich in de opnemer bevindt smelten en alszodanig funktioneert de opnemer niet meer. De opnemer kan dan niet meer geactiveerd worden. In dat geval zal de motor funktioneren als een motor zonder temperatuuropnemer.

Als er een temperatuuropnemer is vereist kan, voor bevestiging aan de onderwatermotor, een Pt100 sensor bij Grundfos worden besteld.

Het is niet aan te bevelen de motor via een frequentie-omvormer te laten draaien bij een frequentie die hoger is dan de nominale frequentie (50 of 60 Hz). Terwijl de pomp in bedrijf is dient de frequentie (en dus ook het toerental) steeds zodanig te zijn dat er voldoende koelvloeistof langs de motor blijft stromen.

Om schade aan het pompgedeelte te voorkomen moet de motor stoppen zodra de volumestroom van de pomp minder wordt dan 0,1 x nominale volumestroom.

Afhankelijk van het gebruikte type omvormer is het mogelijk dat de motor wordt blootgesteld aan schadelijke spanningspieken.

Motoren van het type MS 402, bestemd voor een voedingsspanning tot 440 V (zie typeplaatje motor), dienen tussen de aansluitklemmen voor de voeding te worden beveiligd tegen spanningspieken, die meer dan 650 V bedragen (piekwaarde).

Het verdient aanbeveling alle andere motortypen te beveiligen tegen spanningspieken van meer dan 850 V.

De bovengenoemde storing kan worden voorkomen door een **RC-filter** te monteren tussen de frequentie-omvormer en de motor.

Het geluidsniveau van de motor kan worden gereduceerd door een **LC-filter** te monteren. Dit filter voorkomt tevens spanningspieken die door de frequentie-omvormer worden veroorzaakt.

Neem voor meer informatie contact op met de leverancier van de frequentie-omvormer of met Grundfos.

Motoren van andere makelij dan Grundfos

Neem contact op met Grundfos of met de motorfabrikant.

4.2 Motorbeveiliging

4.2.1 Eenfase motoren

Eenfase onderwatermotoren van het type MS 402 zijn uitgerust met een thermische schakelaar, zodat er geen extra motorbeveiliging nodig is.

Nadat de motor is afgeschakeld door de thermische schakelaar blijven de aansluitklemmen van de motor onder spanning staan.
Zodra de motor voldoende is afgekoeld, wordt deze automatisch opnieuw opgestart.

Eenfase onderwatermotoren van het type MS 4000 dienen te zijn voorzien van een extra beveiliging (in besturingskast of afzonderlijk).

Franklin 4" PSC-motoren dienen op een motorbeveiliging te worden aangesloten.

4.2.2 Driefasen motoren

Grundfos **MS**-motoren zijn verkrijgbaar met of zonder ingebouwde temperatuuropnemer.

Motoren **met** ingebouwde en toegepaste temperatuuropnemer dienen als volgt beveiligd te worden:

- een motorbeveiliging met thermisch relais of
- een MTP 75 en een motorbeveiliging met thermisch relais of
- een MP 204-eenheid en een of meer relais.

Motoren **zonder** of **niet toegepaste** temperatuuropnemer dienen als volgt beveiligd te worden:

- een motorbeveiliging met thermisch relais of
- een MP 204-eenheid en een of meer relais.

Grundfos **MMS**-motoren bezitten geen ingebouwde temperatuuropnemer. Een Pt100 temperatuuropnemer is als accessoire beschikbaar.

Motoren **met** een Pt100 opnemer dienen als volgt beveiligd te worden:

- een motorbeveiliging met thermisch relais of
- een MP 204-eenheid en één of meer relais.

Motoren **zonder** een Pt100 opnemer dienen als volgt beveiligd te worden:

- een motorbeveiliging met thermisch relais of
- een MP 204-eenheid en één of meer relais.

4.2.3 Vereiste instellingen van de motorbeveiliging

Bij koude motoren dient de afschakeltijd van de motorstarter minder dan 10 sec. te bedragen bij vijf maal de nominale ingangsstroom van de motor.

N.B.: Indien niet aan deze voorwaarde wordt voldaan, komt de garantie op de motor te vervallen.

Ten einde ervoor te zorgen dat de onderwatermotor optimaal is beveiligd, dient de motorbeveiliging overeenkomstig de volgende richtlijnen te worden ingesteld:

1. Stel de motorbeveiliging in op de nominale ingangsstroom van de motor.
2. Stel de pomp in voor een half uur normaal bedrijf en laat de pomp zo lang draaien.
3. Draai de schaalindicator naar beneden tot het punt waarop de motor wordt uitgeschakeld.
4. Stel de beveiliging 5% hoger in.

De hoogst toegestane instelling is de nominale ingangsstroom.

Motoren die aanlopen met een ster/driehoek-schakelaar dienen eveneens op deze wijze te worden ingesteld, maar de maximum instelling dient dan te zijn:

Instelling motorbeveiliging = nominale ingangsstroom x 0,58.

De hoogst toegestane opstarttijd voor ster/driehoek-starten of starten met behulp van een autotransformer bedraagt 2 sec.

4.3 Bliksembeveiliging

De installatie kan zijn voorzien van een speciale overspannings-beveiliging die de motor beveiligt tegen overspanning. Een dergelijke overspanning kan bijvoorbeeld worden veroorzaakt door blikseminslag (zie afb. 10).

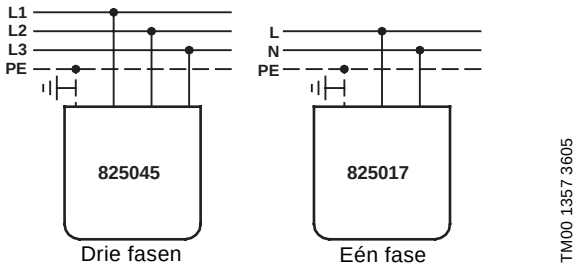

Afb. 10 Bevestiging van een systeem voor overspannings-beveiliging

De overspanningsbeveiliging beveiligt echter niet tegen directe blikseminslag.

De overspanningsbeveiliging dient zo dicht mogelijk in de buurt van de motor op de installatie te worden aangesloten in overeenstemming met de in Nederland/België geldende regelgeving.
Bij Grundfos zijn ook bliksembeveiligingen verkrijgbaar.

Onderwatermotoren van het type MS 402 zijn dermate goed geïsoleerd, dat daarvoor geen extra bliksembeveiliging nodig is.

Bij Grundfos is een speciale kabelverbindingsset verkrijgbaar met ingebouwde overspanningsbeveiliging voor Grundfos 4"-onderwatermotoren (bestelnr. 799911 / 799912).

4.4 Kabelafmetingen

Controleer nauwkeurig of de onderwaterkabel bestand is tegen permanente onderdompeling in de te pompen vloeistof en tegen de temperaturen waar de kabel aan blootgesteld zal worden.

Grundfos heeft onderwaterkabels voor een groot aantal installaties.

De keuze van een bepaalde kabeldoorsnede (q) hangt af van de volgende voorwaarden:

1. De afmetingen van de onderwaterkabel dienen geschikt te zijn voor de nominale ingangsstroom (I).
2. De kabel dient dik genoeg te zijn om spanningsverlies over de kabel op te kunnen vangen.

Gebruik de kabel met de grootste diameter, te bepalen aan de hand van de twee onderstaande methoden (punt 1 en 2).

Ad 1: In onderstaande tabel vindt u de stroomwaarden van de Grundfos-onderwaterkabels (de maximaal toelaatbare stroom in een kabel) bij een omgevingstemperatuur van max. 30°C.
Is de temperatuur hoger dan 30°C, dan dient u contact op te nemen met Grundfos.

Bij het bepalen van de afmetingen dient u ervoor te zorgen dat de nominale ingangsstroom niet hoger is dan de stroomwaarde (I_S).

Voor ster/driehoek-starten dienen de kabelafmetingen zodanig te zijn, dat 0,58 x de nominale ingangsstroom niet hoger is dan de stroomwaarde(I_S) van de kabels.

q [mm^2]	I_S [A]	q [mm^2]	I_S [A]
1,5	18,5	50	153
2,5	25	70	196
4	34	95	238
6	43	120	276
10	60	150	319
16	80	185	364
25	101	240	430
35	126	300	497

Indien u geen onderwaterkabels van Grundfos gebruikt, dient u de kabeldoorsnede te kiezen op basis van de stroomwaarden van de door u gebruikte kabels.

Ad 2:
N.B.: De diameter van de onderwaterkabel moet toereikend zijn om te voldoen aan de eisen voor de spanningsvoorziening als vermeld in paragraaf *4.1 Algemeen*.

Bepaal met behulp van de diagrammen op pagina 148 en 149 hoeveel het spanningsverlies is bij een bepaalde doorsnede.
Daarbij geldt dat:

I = De nominale ingangsstroom van de motor.
Voor ster/driehoek-starten geldt:
I = nominale ingangsstroom van de motor x 0,58.

Lx = De lengte van de kabel vertaald in een spanningsverlies van 1% van de nominale spanning

$$Lx = \frac{\text{kabellengte}}{\text{toelaatbaar spanningsverlies in \%}}$$

q = Doorsnede van de onderwaterkabel.

Trek een rechte lijn tussen de geldende I-waarde en de Lx-waarde. U kiest de dikte die recht boven het punt wordt aangegeven waar de lijn de q-as snijdt.

De diagrammen zijn gebaseerd op grond van de volgende formules:

Eenfase onderwatermotor

$$L = \frac{U \times \Delta U}{I \times 2 \times 100 \times \left(\cos\varphi \times \frac{\rho}{q} + \sin\varphi \times XI\right)}$$

Driefasen onderwatermotor

$$L = \frac{U \times \Delta U}{I \times 1{,}73 \times 100 \times \left(\cos\varphi \times \frac{\rho}{q} + \sin\varphi \times XI\right)}$$

waarbij

L = Lengte van de onderwaterkabel [m]
U = Nominale spanning [V]
ΔU = Spanningsverlies [%]
I = Nominale motorstroom [A]
$\cos\varphi$ = 0,9
ρ = Soortelijke weerstand: 0,02 [Ωmm^2/m]
q = Doorsnede onderwaterkabel [mm^2]
$\sin\varphi$ = 0,436
XI = Inductieweerstand: 0,078 x 10^{-3} [Ω/m]

4.5 Regeling van de eenfase MS 402

De eenfase onderwatermotor MS 402 is uitgerust met een motorbeveiliging. Deze schakelt de motor uit bij oververhitting van de windingen, zonder dat de voedingsspanning naar de motor wordt onderbroken. Wanneer de motor deel uitmaakt van een regelsysteem kan dat heel zinvol zijn.

Als bijv. een compressor, die in combinatie met een okerfilter in een regelsysteem is opgenomen, dan blijft deze toch draaien, nadat de pompmotor door de motorbeveiliging is uitgeschakeld, tenzij er andere voorzorgsmaatregelen zijn genomen.

NL

4.6 Aansluiting van eenfase motoren

4.6.1 Tweedraadsmotoren

De MS 402-tweedraadsmotoren van Grundfos zijn voorzien van een motorbeveiliging en een starter, zodat directe aansluiting aan het elektriciteitsnet mogelijk is (zie afb. 11).

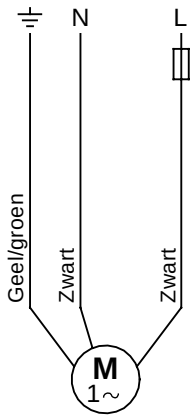

TM00 1358 5092

Afb. 11 Tweedraadsmotoren

4.6.2 PSC-motoren

Sluit de PSC-motoren aan op het elektriciteitsnet met behulp van een bedrijfscondensator die geschikt is voor continu bedrijf.

Selecteer de juiste condensatorcapaciteit uit onderstaande tabel:

Motor	Condensator
0,25 kW	12,5 µF / 400 V / 50 Hz
0,37 kW	16 µF / 400 V / 50 Hz
0,55 kW	20 µF / 400 V / 50 Hz
0,75 kW	30 µF / 400 V / 50 Hz
1,10 kW	40 µF / 400 V / 50 Hz
1,50 kW	50 µF / 400 V / 50 Hz
2,20 kW	75 µF / 400 V / 50 Hz

Sluit de Grundfos MS 402 PSC-motor, die is uitgerust met een motorbeveiliging, aan zoals aangegeven in afb. 12.

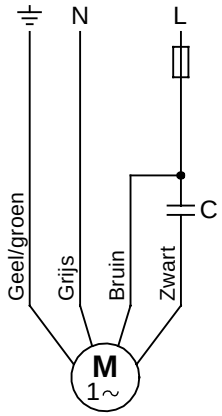

TM00 1359 5092

Afb. 12 PSC-motoren

Zie www.franklin-electric.com en afb. 13.

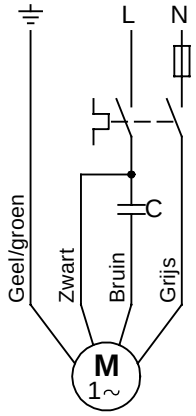

TM00 1361 1200

Afb. 13 Franklin-onderwatermotoren

4.6.3 Driedraadsmotoren

Sluit de **Grundfos MS 4000**-driedraadsmotoren via de Grundfos-besturingskast SA-SPM 2 of 3 met motorbeveiliging aan op het elektriciteitsnet.

Sluit de **Grundfos MS 402**-driedraadsmotoren van Grundfos, die zijn uitgerust met een motorbeveiliging, via de Grundfos-besturingskast SA-SPM 2 of 3 (zonder motorbeveiliging) aan op het elektriciteitsnet.

Sluit de MS 4000- en MS 402-motoren aan zoals aangegeven in onderstaande tabel:

Motor	Kabelkleur	Besturingskast	Aders
Tot 0,75 kW	Grijs	1 N	N
	Bruin	2 L	L
	Zwart	3 SA-SPM 2	
	Geel/groen	⏚	PE
Vanaf 1,10 kW	Grijs	1 N	N
	Bruin	2 L	L
	Zwart	3 SA-SPM 3	
	Geel/groen	⏚	PE

4.7 Aansluiting van driefasen motoren

Driefasen onderwatermotoren dienen te zijn beveiligd (zie paragraaf *4.2.2 Driefasen motoren*).

Hoe de MP 204 wordt aangesloten, leest u in de bijbehorende installatie- en bedieningsinstructies.

Wanneer een conventionele motorbeveiliging wordt gebruikt, dient u de motor op de hieronder beschreven wijze aan te sluiten.

4.7.1 Controleren van de draairichting

N.B.: De pomp mag alleen worden gestart wanneer het zuigverbindingsstuk geheel in de vloeistof is ondergedompeld.

Nadat de pomp op de voedingsspanning is aangesloten kunt u de draairichting als volgt controleren:

1. Start de pomp en ga na welke capaciteit en opvoerhoogte de pomp geeft.
2. Stop de pomp en verwissel twee fasen.
   Bij motoren met windingen voor ster/driehoek-starten vervangt u U1 door V1 en U2 door V2.
3. Start de pomp en controleer capaciteit en opvoerhoogte.
4. Stop de pomp.
5. Vergelijk de resultaten die bij punt 1 en 3 werden geregistreerd. De verbinding waarbij de grootste capaciteit en opvoerhoogte ontstaan, is de juiste.

NL

4.7.2 Grundfos-motor: directe inschakeling

Hoe de Grundfos-onderwatermotoren met windingen voor directe inschakeling worden aangesloten, ziet u in onderstaande tabel en afb. 14.

Voeding	Kabel/aansluiting
	Grundfos 4"- en 6"-motoren
PE	PE (geel/groen)
L1	U (bruin)
L2	V (zwart)
L3	W (grijs)

Controleer de draairichting zoals omschreven in paragraaf *4.7.1 Controleren van de draairichting*.

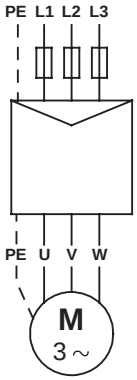

TM03 2099 3705

Afb. 14 Grundfos-motor: directe inschakeling

4.7.3 Grundfos-motor: ster/driehoek-starten

Hoe de Grundfos-onderwatermotoren met windingen voor ster/driehoek-starten worden aangesloten, ziet u in onderstaande tabel en afb. 15.

Aansluiting	Grundfos 6"-motoren
PE	Geel/groen
U1	Bruin
V1	Zwart
W1	Grijs
W2	Bruin
U2	Zwart
V2	Grijs

Controleer de draairichting zoals omschreven in paragraaf *4.7.1 Controleren van de draairichting*.

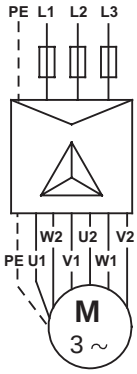

TM03 2100 3705

Afb. 15 Grundfos-motor: ster/driehoek-starten

Is ster/driehoek-starten niet vereist maar directe inschakeling wel, dan dient u de onderwatermotoren aan te sluiten zoals aangegeven in afb. 16.

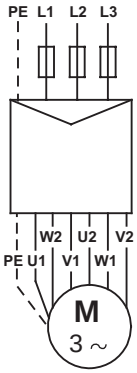

TM03 2101 3705

Afb. 16 Grundfos-motor: directe inschakeling

4.7.4 Aansluiten bij onbekende kabelmarkering/aansluiting

Als onbekend is waar de afzonderlijke aders van de voedingskabel op het elektriciteitsnet aangesloten moeten worden om de juiste draairichting te verkrijgen, gaat u als volgt te werk:

Motoren met windingen voor directe inschakeling

Sluit de pomp aan op het elektriciteitsnet.

Controleer vervolgens de draairichting zoals omschreven in paragraaf *4.7.1 Controleren van de draairichting*.

Motoren met windingen voor ster/driehoek-starten

De windingen van de motor zijn vastgesteld met behulp van een ohmmeter en de aderparen zijn op basis daarvan benoemd: U1-U2, V1-V2 en W1-W2 (zie afb. 17).

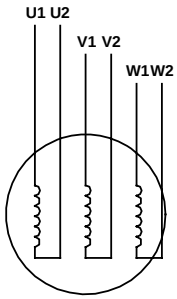

TM00 1367 5092

Afb. 17 Niet-geïdentificeerde kabelmarkering/aansluiting – motoren gewikkeld voor ster-delta inschakeling

Indien ster/driehoek-starten is vereist, sluit dan de draden aan zoals aangegeven in afb. 15.

Indien directe inschakeling is vereist, sluit dan de draden aan zoals aangegeven in afb. 16.

Controleer vervolgens de draairichting zoals omschreven in paragraaf *4.7.1 Controleren van de draairichting*.

4.7.5 Franklin-, Mercury- en Pleuger-motoren

Hoe de Franklin-, Mercury- en Pleuger-motoren worden aangesloten, leest u onder *4.7.4 Aansluiten bij onbekende kabelmarkering/aansluiting*.

5. Installatie van de pomp

Voordat u met werkzaamheden aan de pomp/motor begint, dient u er zeker van te zijn dat de voedingsspanning naar de pomp is afgeschakeld en niet per ongeluk kan worden ingeschakeld.

5.1 Bevestigen van de motor aan de pomp

Wanneer de pomp en motor als losse delen worden geleverd (lange pompen), moet de motor als volgt aan de pomp worden bevestigd:

1. Gebruik de leidingklemmen om de motor te verplaatsen.
2. Plaats de motor in verticale positie in de schacht van de bron, zie afb. 18.

NL

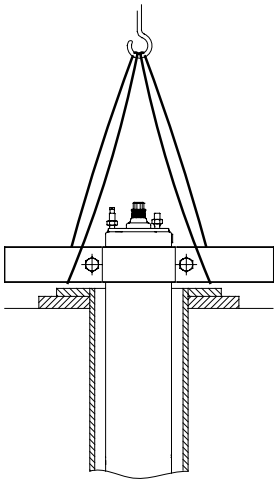

TM00 5259 2402

Afb. 18 Motor in verticale positie

3. Hijs het pompgedeelte d.m.v. leidingklemmen welke aan de persleiding zijn gemonteerd, zie afb. 19.

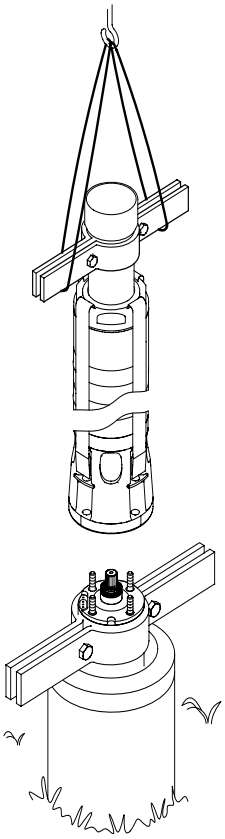

TM02 5263 2502

Afb. 19 Het tillen van de pomp in positie

4. Plaats het pompgedeelte boven op de motor.
5. Plaats de moeren en draai deze aan, zie volgende tabel.

De bouten en moeren waarmee de spanbanden aan de pomp worden bevestigd, diagonaal aandraaien tot het in onderstaande tabel aangegeven aanhaalmoment:

Spanbanden Bout/moer	Aanhaalmoment [Nm]
M8	18
M10	35
M12	45
M16	120
SP 215, 50 Hz, meer dan 8 traps SP 215, 60 Hz, meer dan 5 traps	150

N.B.: Vergewis u ervan dat het verbindingsstuk tussen pomp en motor goed aansluit.

Draai de moeren bij het monteren van de motor en de pomp diagonaal vast tot het in onderstaande tabel aangegeven aanhaalmoment:

Pomp/motor Diameter tapeind	Aanhaalmoment [Nm]
M8	18
M12	70
M16	150
M20	280

N.B.: Zorg ervoor dat de pompkamers na montage precies goed zitten.

5.2 Verwijderen en aanbrengen van kabelbeschermer

Zie pagina 150 en 151 voor het verwijderen en aanbrengen van de kabelbeschermer(s).

De kabelbeschermer kan op de pomp (bijv. SP 215) worden geschroefd. Draai bij het verwijderen van de kabelbeschermer eerst de schroeven los.

N.B.: Zorg ervoor dat de pompkamers na montage precies goed zitten.

5.3 Aansluiten van een onderwaterkabel

5.3.1 Grundfos onderwatermotoren

Alvorens de onderwaterkabel op de motor aan te sluiten, dient u ervoor te zorgen dat de kabelsok schoon en droog is.

Om het aansluiten van de kabel te vergemakkelijken kunt u de rubber delen van de kabelplug insmeren met een niet-geleidende siliconenpasta.

De schroeven waarmee de kabel wordt bevestigd aandraaien tot het onderstaande aanhaalmoment:

MS 402: 2,0 Nm.
MS 4000: 2,0 Nm.
MS 6000: 4,0-5,0 Nm.
MMS 6000: 10 Nm.
MMS 12000: 15 Nm.

5.4 Stijgbuis

Bij gebruik van bijv. een kettingtang voor montage van de stijgleiding aan de pomp, mag uitsluitend de pompkamer, waarin zich de persaansluiting bevindt, gebruikt worden om de pomp vast te houden.

De schroefdraadverbindingen aan de stijgbuis dienen op maat gesneden en aan elkaar gekoppeld te zijn. Alleen dan kunt u er zeker van zijn dat ze niet los werken wanneer ze worden blootgesteld aan torsie, die wordt veroorzaakt door het starten en stoppen van de pomp.

De schroefdraadverbinding aan het deel van de stijgbuis dat op de pomp aangesloten moet worden, mag niet langer zijn dan de draadaansluiting van de pomp.

Als de kans bestaat dat door de pijpleidingen geluid door het gebouw wordt getransporteerd, is het raadzaam kunststofleidingen te gebruiken.

N.B.: Kunststofleidingen alleen gebruiken bij 4"-pompen.

Wanneer gebruik wordt gemaakt van kunststofleidingen, dient u de pomp te beveiligen met een beveiligingskabel, die u vastzet aan de perskamer van de pomp (zie afb. 20).

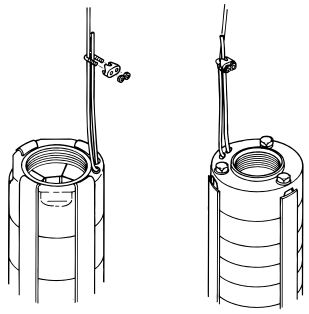

TM00 1368 2298

Afb. 20 Het bevestigen van de beveiligingskabel

NL

Voor het aansluiten van een pomp op een kunststofleiding dient een flexibele koppeling te worden gebruikt.

Als gebruik wordt gemaakt van flensbuizen, dienen de flenzen te zijn voorzien van sleuven voor de onderwaterkabel en een water-indicatieleiding (indien aangebracht).

5.5 Maximale installatiediepte onder water

Grundfos MS 402: 150 m.
Grundfos MS 4000: 600 m.
Grundfos MS 6000: 600 m.
Grundfos MMS: 250 m.
Franklin-motoren: 350 m.
Mercury-motoren: 350 m.
Pleuger-motoren: 350 m.

5.6 Bevestiging van kabels

Gebruik om de 3 meter speciale kabelbevestigingen om de onderwaterkabel en de beveiligingskabel (indien aangebracht) aan de stijgbuis van de pomp vast te maken.

Grundfos levert op aanvraag setjes kabelbevestigingen. Elk set bestaat uit een 1,5 mm dikke rubberband en 16 knopen.

Bevestigen van een kabel: Snij de rubberband zodanig af dat het stuk zonder split zo lang mogelijk wordt.
Breng een knoop aan in de eerste split.
Leg de draad langs de onderwaterkabel (afb. 21).

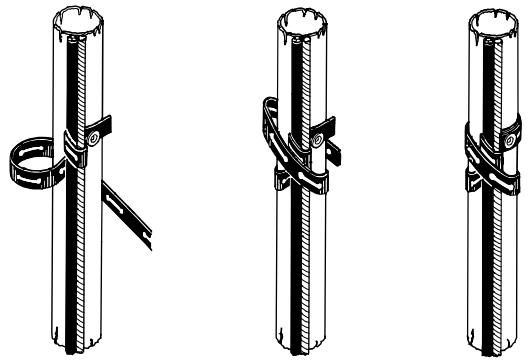

Afb. 21 Het bevestigen van de kabelklemmen

Draai de band eenmaal rond de draad en de kabel.
Draai de band vervolgens ten minste tweemaal strak rond pijp, draad en kabel.
Duw de split over de knoop heen en snij de band af.

Op plaatsen waar grotere kabeldoorsneden worden gebruikt, zal het nodig zijn de band diverse malen rond het geheel te wikkelen.

Bij gebruik van kunststofleidingen dient er tussen de pijp en elke kabelbevestiging enige speling in acht te worden genomen, aangezien kunststofleidingen onder belasting uitzetten.

Als er flensbuizen worden gebruikt, dienen de kabelbevestigingen boven en onder ieder flensverbindingsstuk te worden vastgemaakt.

5.7 Pomp laten zakken

Controleer het boorgat met behulp van een binnenpasser, zodat u zeker bent dat de doorgang niet is geblokkeerd.

Laat de pomp voorzichtig in het boorgat zakken. Pas op dat u hierbij de motorkabel en de onderwatekabel niet beschadigt.

N.B.: Laat de pomp niet zakken aan de motorkabel; dit geldt uiteraard ook voor het ophijsen.

5.8 Installatiediepte

Het dynamische waterpeil dient zich altijd boven het zuigverbindingsstuk van de pomp te bevinden (zie paragraaf *3.2 Installatie van de pomp* en afb. 22).

De minimum inlaatdruk hangt samen met de NPSH waarde van de desbetreffende pomp.
Hierbij dient 1 m veiligheidsmarge in acht te worden genomen.

Installeer de pomp bij voorkeur zodanig dat het motorgedeelte zich boven doorlaatopeningen van de bronwand bevindt, zodat een optimale koeling wordt gewaarborgd, zie paragraaf *3.4 Vloeistoftemperatuur/koeling*.

Sluit het boorgat af met een speciale afdichting nadat de pomp op de vereiste diepte is geïnstalleerd.

Vier de beveiligingskabel zodanig dat de kabel niet meer belast wordt en bevestig de kabel aan de boorgatafdichting met behulp van kabelwartels.

N.B.: Houd bij het bepalen van de installatiediepte van pompen die zijn aangesloten op kunststofleidingen, rekening met het feit dat dit soort buizen uitzet wanneer ze worden belast.

6. In bedrijf nemen

6.1 Opstarten

Vergewis u ervan dat de pomp op de juiste wijze is aangesloten en in de te pompen vloeistof is geïnstalleerd. Start de pomp terwijl de persafsluiter tot ca. 1/3 van het maximale watervolume is gesloten.

Controleer de draairichting zoals omschreven in paragraaf *4.7.1 Controleren van de draairichting*.

Wanneer zich in het water vuildeeltjes bevinden, dient de afsluiter langzaam te worden geopend naarmate het water schoner wordt. Stop de pomp pas wanneer het water volkomen schoon is, anders kunnen de pomponderdelen en de terugslagklep verstopt raken.

Let erop dat de pomp onder water blijft terwijl deze inbedrijf is en de waterspiegel daalt.

Het dynamische waterpeil dient zich altijd boven het zuigverbindingsstuk van de pomp te bevinden (zie paragraaf *3.2 Installatie van de pomp* en afb. 22).

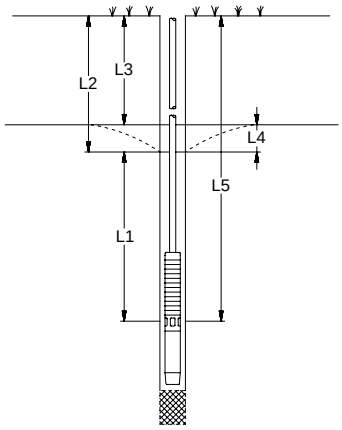

Afb. 22 Vergelijking van diverse waterniveaus

L1: Minimale installatiediepte onder het dynamische waterpeil. Min. 1 meter wordt aanbevolen.
L2: Diepte t.o.v. dynamisch waterpeil.
L3: Diepte t.o.v. statisch waterpeil.
L4: Daling. Dit is het verschil tussen het dynamische en het statische waterpeil.
L5: Installatiediepte.

Als de pomp meer kan verpompen dan de bron oplevert, is het raadzaam de pomp te voorzien van de Grundfos-bewakingsmonitor MP 204 of een ander type droogloopbeveiliging.

Als er geen waterpeilelektroden of niveauschakelaars zijn geïnstalleerd, mag het waterpeil zakken tot het zuigverbindingsstuk van de pomp. Nadat dit punt is bereikt, zuigt de pomp lucht in.

N.B.: Door langdurig bedrijf in luchtrijk water kan de pomp beschadigd raken, terwijl tevens onvoldoende koeling van de motor het gevolg kan zijn.

NL

6.2 Bedrijf

6.2.1 Minimale capaciteit

Stel een pomp nooit zo laag in dat niet kan worden voldaan aan de in paragraaf *3.4 Vloeistoftemperatuur/koeling* gespecificeerde koelingseisen. U kunt er dan namelijk niet zeker van zijn dat de motor voldoende wordt gekoeld.

6.2.2 Aantal malen starten en stoppen

Motortype	Aantal malen starten
MS 402	Minimaal 1 maal per jaar. Maximaal 100 maal per uur. Maximaal 300 maal per dag.
MS 4000	Minimaal 1 maal per jaar. Maximaal 100 maal per uur. Maximaal 300 maal per dag.
MS 6000	Minimaal 1 maal per jaar. Maximaal 30 maal per uur. Maximaal 300 maal per dag.
MMS 6000	Minimaal 1 maal per jaar. Maximaal 15 maal per uur. Maximaal 360 maal per dag.
MMS 8000	Minimaal 1 maal per jaar. Maximaal 10 maal per uur. Maximaal 240 maal per dag.
MMS 10000	Minimaal 1 maal per jaar. Maximaal 8 maal per uur. Maximaal 190 maal per dag.
MMS 12000	Minimaal 1 maal per jaar. Maximaal 5 maal per uur. Maximaal 120 maal per dag.
Franklin	Minimaal 1 maal per jaar. Maximaal 100 maal per dag.
Mercury 6"	Minimaal 1 maal per jaar. Maximaal 20 maal per uur.
Mercury 8"	Minimaal 1 maal per jaar. Maximaal 15 maal per uur.
Mercury 10"	Minimaal 1 maal per jaar. Maximaal 10 maal per uur.
Mercury 12"	Minimaal 1 maal per jaar. Maximaal 6 maal per uur.
Pleuger	Minimaal 1 maal per jaar. Maximaal 100 maal per dag.

NL

7. Onderhoud en service

De pompen vereisen geen speciaal onderhoud.

Eventuele reparaties zijn eenvoudig uit te voeren.

Grundfos levert Service Kits en gereedschappen om reparaties uit te kunnen voeren.

Reparaties kunnen ook door een Grundfos service centre worden verricht.

Indien een pomp is gebruikt voor een vloeistof die schadelijk voor de gezondheid is, wordt deze pomp als verontreinigd beschouwd.

Wanneer Grundfos wordt verzocht een pomp een servicebeurt te geven, dienen alle gegevens over de gepompte vloeistof aan Grundfos te worden verstrekt *voordat* de pomp aan Grundfos wordt geretourneerd. Gebeurt dat niet, dan kan Grundfos weigeren de pomp een servicebeurt te geven.

Eventuele kosten voor het retourneren van de pomp zijn voor rekening van de klant.

8. Opsporen van storingen

Storing	Oorzaak	Oplossing
1. De pomp werkt niet.	a) De zekeringen zijn doorgebrand.	Vervang de doorgebrande zekeringen. Als ook de nieuwe zekeringen doorbranden, dienen de elektrische installatie en de onderwaterkabel te worden nagezien.
	b) De aardlekschakelaar of de spanningsgestuurde aardlekschakelaar heeft de motor uitgeschakeld.	Maak de uitschakeling ongedaan.
	c) Geen voedingsspanning.	Neem contact op met het elektriciteitsbedrijf.
	d) De motorbeveiligingsschakelaar heeft de motor uitgeschakeld.	Reset de overbelastingsbeveiliging van de motor in de oorspronkelijke positie (automatisch of zo mogelijk handmatig). Als de motor weer wordt uitgeschakeld, controleer dan de spanning. Lees verder bij e) en h) wanneer de spanning in orde is.
	e) De motorstartschakelaar is defect.	Vervang de motorstartschakelaar.
	f) De starter is defect.	Repareer/vervang de starter.
	g) Het stuurstroomcircuit is onderbroken of defect.	Controleer de elektrische installatie.
	h) De droogloopbeveiliging heeft de voedingsspanning naar de pomp uitgeschakeld vanwege te laag waterpeil.	Controleer het waterpeil. Is dit in orde, dan dient u de waterpeilelektroden/niveauschakelaar te controleren.
	i) De pomp/onderwaterkabel is defect.	Repareer/vervang de pomp/kabel.
2. De pomp werkt, maar er komt geen water uit.	a) De persafsluiter is gesloten.	Open de afsluiter.
	b) Geen water of te laag waterpeil in boorgat.	Zie punt 3 a).
	c) De terugslagklep is gesloten en geblokkeerd.	Haal de pomp op en reinig/vervang de klep.
	d) Het inlaatfilter is verstopt.	Haal de pomp op en reinig het filter.
	e) De pomp is defect.	Repareer/vervang de pomp.
3. De pomp werkt met verminderde capaciteit.	a) Het waterpeil daalt sneller dan voorzien.	Plaats de pomp op een lager niveau, smoor de pomp of vervang de pomp door een kleiner model om een kleinere capaciteit te verkrijgen.
	b) Verkeerde draairichting.	Zie paragraaf *4.7.1 Controleren van de draairichting*.
	c) De afsluiters in de persleiding zijn gedeeltelijk gesloten/geblokkeerd.	Controleer/reinig/vervang indien nodig de kleppen.
	d) De persleiding is gedeeltelijk verstopt door vuil.	Reinig/vervang de persleiding.
	e) De terugslagklep van de pomp is gedeeltelijk geblokkeerd.	Haal de pomp op en controleer/vervang de klep.
	f) De pomp en de stijgbuis zijn gedeeltelijk verstopt door vuil.	Haal de pomp op en controleer/reinig/vervang indien nodig de pomp. Reinig de pijpleidingen.
	g) De pomp is defect.	Repareer/vervang de pomp.
	h) Lekkage in de pijpleidingen.	Controleer/repareer de pijpleidingen.
	i) De stijgbuis is defect.	Vervang de stijgbuis.
4. De pomp start en stopt vaak.	a) Het verschil van de in- en uitschakeldruk is te klein.	Verhoog het drukverschil. De uitschakeldruk mag echter niet hoger zijn dan de werkdruk van de drukvat en de inschakeldruk dient hoog genoeg te zijn om voor voldoende watertoevoer te kunnen zorgen.
	b) De waterpeilelektroden of niveauschakelaars in het reservoir zijn niet juist geïnstalleerd.	Pas de intervallen van de elektroden/niveauschakelaars aan om er zeker van te zijn dat er voldoende tijd is tussen het in- en uitschakelen van de pomp. Zie de installatie- en bedieningsinstructies voor de gebruikte automatische apparatuur. Als de intervallen tussen starten/stoppen niet gewijzigd kunnen worden via de automatische apparatuur, is het mogelijk de pompcapaciteit te verkleinen door de persafsluiter te smoren.
	c) De terugslagklep lekt of is half geopend blijven steken.	Reinig/vervang de terugslagklep.
	d) De luchtinhoud in het druk/membraanvat is te klein.	Pas de luchthoeveelheid in het druk/membraanvat aan overeenkomstig de bijbehorende installatie- en bedieningsinstructies.
	e) Het druk/membraanvat is te klein.	Vergroot de capaciteit van het druk/membraanvat door deze te vervangen door, of uit te breiden met, een ander vat.
	f) Het membraan van het membraanvat is defect.	Controleer het membraanvat.

NL

9. Controleren van motor en kabel

1. Voedingsspanning 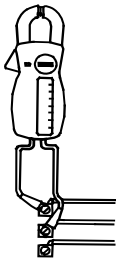 TM00 1371 5092	Meet de spanning tussen de fasen met behulp van een voltmeter. Meet bij eenfase motoren tussen de fase en 0 of tussen twee fasen, afhankelijk van het type voeding. Sluit de voltmeter aan op de aansluitpunten in de motorstarterkast.	De spanning dient zich bij belasting van de motor tussen de in paragraaf *4.1 Algemeen* opgegeven grenswaarden te bevinden. Als er grotere spanningsverschillen zijn, kan de motor doorbranden. Grote spanningsverschillen wijzen op een slechte stroomtoevoer. Zet de pomp stil totdat het defect is hersteld.
2. Stroomverbruik 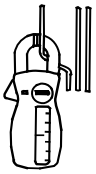 TM00 1372 5092	Meet de stroomsterkte van iedere fase terwijl de pomp draait bij een constante persdruk (indien mogelijk bij de capaciteit waarbij de motor het zwaarst wordt belast). Zie het typeplaatje voor de max. stroomsterkte.	Bij driefasen motoren mag het verschil tussen de fasen wat betreft de stroomsterkte niet meer bedragen dan 5%. Is dat wel het geval of is de stroomsterkte groter dan de vollaststroom, dan zijn de volgende oorzaken mogelijk: • De contacten van de motorbeveiliging zijn doorgebrand. Vervang de contacten of vervang de beveiliging van de eenfase pompen. • Er is slecht contact in aders, mogelijk bij kabelverbinding (zie punt 3). • Te hoge of te lage voedingsspanning (zie punt 1). • De motorwindingen maken kortsluiting of zijn gedeeltelijk van elkaar geraakt (zie punt 3). • Beschadigde pomp veroorzaakt overbelasting van de motor. De pomp moet worden nagekeken. • De weerstandswaarde van de motorwindingen wijkt teveel af (driefasen). Plaats de fasen in fasevolgorde voor een uniformere belasting. Zie punt 3 als dit niet helpt.
Punten 3 en 4: Doormeten is niet nodig als voedingsspanning en stroomverbruik normaal zijn.		
3. Weerstand van de windingen 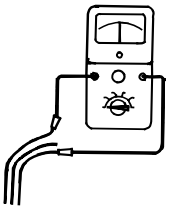 TM00 1373 5092	Maak de onderwaterkabel los in de motorstarterkast. Meet de weerstand van de windingen tussen de aders van de onderwaterkabel.	Bij driefasen motoren mag de afwijking tussen de hoogste en de laagste weerstandswaarde niet meer bedragen dan 10%. Is de afwijking groter, dan dienen de motor, de motorkabel en de onderwaterkabel afzonderlijk te worden doorgemeten. Repareer/vervang defecte onderdelen. **N.B.:** Bij eenfase driedraadsmotoren zal de bedrijfswinding de laagste weerstand aangeven.
4. Isolatieweerstand 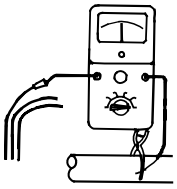 TM00 1374 5092	Maak de onderwaterkabel los in de motorstarterkast. Meet de isolatieweerstand tussen de fase en aarde (frame). Zorg dat de aardverbinding in orde is.	Als de isolatieweerstand lager is dan 0,5 MΩ, dienen motor of kabel te worden gerepareerd. Het is mogelijk dat de Nederlandse/België regelgeving andere waarden voor de isolatieweerstand voorschrijft.

NL

10. Afvalverwijdering

Dit product, of onderdelen van dit product dienen op een milieuvriendelijke manier afgevoerd te worden:

1. Breng het naar het gemeentelijke afvaldepot.
2. Wanneer dit niet mogelijk is, neemt u dan contact op met uw Grundfos leverancier.

INNEHÅLLSFÖRTECKNING

Läs noggrant igenom denna monterings- och drifts-instruktion innan installation av pumpen påbörjas. Installation och drift ska ske enligt lokala föreskrifter och gängse praxis.

Denna instruktion omfattar undervattensmotorer, typ Grundfos MS och MMS, och Grundfos undervattenspumpar, typ SP, utrustade med undervattensmotorer av typerna Grundfos MS eller MMS, Franklin 4"-8", Mercury 6"-12" och Pleuger 6"-12".

Är pumpen utrustad med en annan motor än Grundfos MS eller MMS, bör man observera, att de tekniska data som gäller motorn, kan skilja sig från de data, som finns angivna i denna instruktion.

1. Leverans och förvaring

1.1 Leverans

Grundfos undervattenspumpar bör förvaras i fabriksemballaget tills de monteras.

Efter uppackning, undvik att utsätta pumpen för böjande rörelser som kan medföra skador eller att den blir skev.

OBS: Pumparna skall förvaras i originalförpackningen. Om pumpen packas upp skall den förvaras stående tills den installeras. När pumpdel och motor levereras som separata enheter (långa pumpar), montera ihop motor och pump enligt beskrivningen i avsnitt *5.1 Montering av motor på pump*.

OBS: Den extra dataskylt som medföljer fästes på installations-platsen.

Pumpen får ej utsättas för onödiga stötar och skakningar.

1.2 Förvaring och hantering

Förvaringstemperatur

Pump: –20°C till 60°C.
Motor: –20°C till 70°C.

Motorerna skall förvaras i ett torrt utrymme med god ventilation.

OBS: Om motorer av typen MMS ligger på lager i mer än ett år, skall motoraxeln vridas för hand minst en gång i månaden.
Har motorn legat på lager i mer än ett år innan installation, skall motorns roterande delar demonteras och ses över innan använd-ning.

Undvik förvaring i direkt solljus.

Om pumpen är uppackad, skall den förvaras horisontalt med stöd under eller vertikalt för att undvika att den blir skev. Se till att pumpen inte rullar eller välter. Vid förvaring kan pumpen stöttas under som visas på fig. 1.

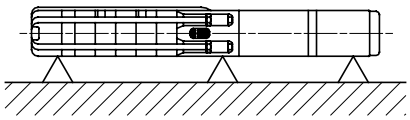

Fig. 1 Pumpplacering under förvaring

1.2.1 Frostskydd

Skall pumpen förvaras efter att ha varit i drift, skall den förvaras frostfritt, eller så skall motorvätskan säkras mot frost.

2. Allmänt

2.1 Användning

Grundfos undervattenspumpar typ SP har ett brett användnings-område inom vattenförsörjning och vätsketransport, t.ex. grund-vattenförsörjning till bostadshus eller vattenverk, vattenförsörj-ning till handelsträdgårdar eller lantbruk, grundvattensänkning och tryckstegring samt för diverse industriella uppgifter.

Pumpen installeras så att inloppsdelen är helt nedsänkt i pump-vätskan. Pumpen kan användas såväl horisontalt som vertikalt, se dock avsnitt *3.2 Placeringskrav*.

2.2 Pumpvätskor

Rena tunnflytande, **icke explosiva** vätskor utan innehåll av fasta partiklar eller fibrer.

Vattnets maximala sandinnehåll får inte överstiga 50 g/m^3. Större sandhalter förkortar pumpens livslängd och ökar risken för igen-slamning.

OBS: Används pumpen för att pumpa en vätska vars densitet är större än vattens, skall en motor med motsvarande högre effekt användas.

Om vätskor med större viskositet än vatten skall pumpas, bör Grundfos rådfrågas.

Vid pumpning av vätskor med större aggressivitet än dricksvatten används specialutförande SP A N, SP A R, SP N, SP R och SPE.

Maximal vätsketemperatur framgår av avsnitt *3.4 Vätsketemperatur/kylning*.

S

2.3 Ljudtrycknivå

Ljudtrycknivån är mätt i enlighet med Europarådets bestämmelser, direktiv 98/37/EC (maskindirektivet).

Ljudtrycknivå för pumpar

Gäller för pumpar nedsänkta i vatten utan extern reglerventil.

Pumptyp	$\overline{L}_{pA}$ [dB(A)]
SP 1A	<70
SP 2A	<70
SP 3A	<70
SP 5A	<70
SP 8A	<70
SP 14A	<70
SP 17	<70
SP 30	<70
SP 46	<70
SP 60	<70
SP 77	<70
SP 95	<70
SP 125	79
SP 160	79
SP 215	82

Ljudtrycknivå för motorer

Ljudtrycknivån för Grundfos MS och MMS motorer är lägre än 70 dB(A).

Övriga motorfabrikat: Se monterings- och driftsinstruktion för aktuell motor.

3. Kontrollåtgärder före start

Innan arbete på pumpen påbörjas, kontrollera att nätspänningen är frånkopplad och att den inte oavsiktligt kan återinkopplas.

3.1 Kontroll av motorvätska

Undervattensmotorerna är från fabriken fyllda med en icke giftig specialvätska, som skyddar mot frysning ned till –20°C.

OBS: Vätskenivån i motorn skall kontrolleras och vid behov skall efterfyllning göras.

OBS: Om frysrisk föreligger, skall Grundfos specialvätska användas vid efterfyllning, annars kan rent vatten användas (dock **ej** destillerat vatten).

Efterfyllning av vätska görs enligt följande.

3.1.1 Grundfos undervattensmotorer MS 4000 och MS 402

Påfyllningshålet för motorvätska finns:

MS 4000: ovanpå motorn.

MS 402: i motorns botten.

1. Placera undervattenspumpen som visas i fig. 2. Påfyllningsskruven skall vara motorns högsta punkt.
2. Demontera påfyllningsskruven.
3. Pumpa in vätska i motorn med sprutan, fig. 2, tills vätskan rinner över i påfyllningshålet.
4. Montera skruven i påfyllningshålet, och drag åt den, innan pumpens läge ändras.

Åtdragningsmoment:

MS 4000: 3,0 Nm.

MS 402: 2,0 Nm.

Undervattenspumpen är nu klar för installation.

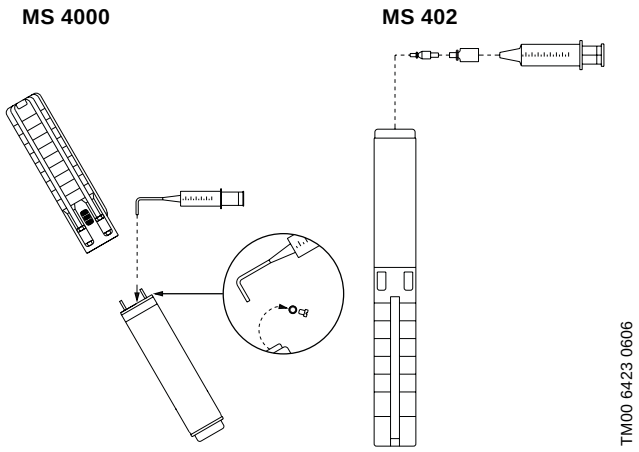

Fig. 2 Pumpplacering under fyllning – MS 4000 och MS 402

3.1.2 Grundfos undervattensmotorer MS 6000

- Om motorn levererats från lager, skall vätskenivån kontrolleras, innan motorn monteras på pumpen, se fig. 3.
- På pumpar levererade direkt från Grundfos är vätskenivån kontrollerad.
- Vid service skall vätskenivån kontrolleras, se fig. 3.

Fyllning:

Påfyllningshålet för motorvätska finns överst på motorn.

1. Placera undervattenspumpen som visas i fig. 3. Påfyllningsskruven skall vara motorns högsta punkt.
2. Demontera påfyllningsskruven.
3. Pumpa in vätska i motorn med sprutan, fig. 3, tills vätskan rinner över i påfyllningshålet.
4. Montera skruven i påfyllningshålet, och drag åt den, innan pumpens läge ändras.

Åtdragningsmoment: 3,0 Nm.

Undervattenspumpen är nu klar för installation.

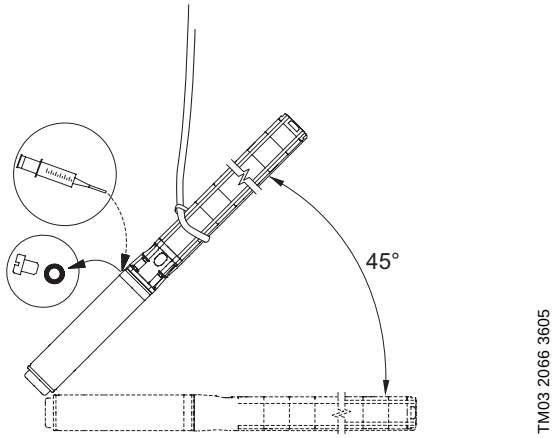

Fig. 3 Pumpplacering under fyllning – MS 6000

3.1.3 Grundfos dränkbara motorer MMS 6000, MMS 8000, MMS 10000 och MMS 12000

Fyllning:

1. Placera motorn i 45° vinkel, med motorns övre del högst, se fig. 4.
2. Skruva ut pluggen A och placera en tratt i hålet.
3. Häll kranvatten i motorn tills vätskan i motorn börjar rinna ut vid A.
   OBS: Använd inte motorvätskan – den innehåller olja.
4. Avlägsna tratten och sätt tillbaka pluggen A.

OBS: Innan motorn monteras på en pump efter en längre förvaringsperiod, ska du smörja axeltätningen med några droppar vatten och dra runt axeln.

Undervattenspumpen är nu klar för installation.

S

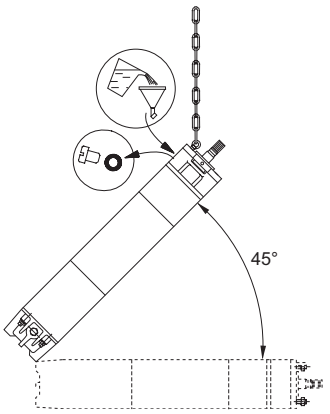

TM03 2065 3605

Fig. 4 Motorplacering under fyllning – MMS

3.1.4 Franklin undervattensmotorer från 3 kW och uppåt

Vätskenivån i Franklin 4" och 6" undervattensmotorer kontrolleras genom att mäta avståndet till det inbyggda gummimembranet. Avståndet kan mätas genom att föra in en mätsticka eller liknande genom hålet i motorns bottenstycke, tills den vidrör membranet, fig. 5.
OBS: Gummimembranet får ej skadas.

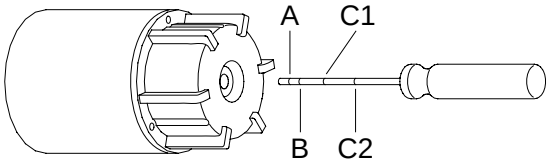

TM00 1353 5092

Fig. 5 Mät avståndet från bottenplattan till membranet

Följande tabell anger korrekt avstånd från bottenstyckets utsida till membranet:

Motor	Mått	Avstånd
Franklin 4", 0,25 till 3 kW (se fig. 6a)	A	8 mm
Franklin 4", 3 till 7,5 kW (se fig. 6b)	B	16 mm
Franklin 6", 4 till 45 kW (se fig. 6c)	C1	35 mm
Franklin 6", 4 till 22 kW (se fig. 6d)	C2	59 mm

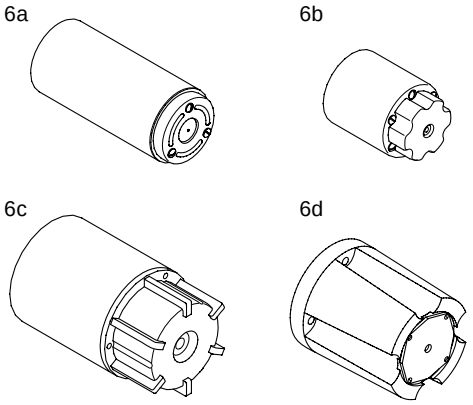

TM00 6422 3695

Fig. 6 Franklin undervattensmotorer

Om avståndet inte är korrekt, skall en justering göras som beskrivs i avsnitt *3.1.5 Franklin undervattensmotorer*.

3.1.5 Franklin undervattensmotorer

Följande tillvägagångssätt används vid kontroll av motorvätskan i Franklin 8" undervattensmotorer:

1. Peta ut filtret framför ventilen överst på motorn med hjälp av en skruvmejsel. Har filtret en skåra, skall det skruvas ut. Påfyllningsventilens placering framgår av fig. 7.
2. Tryck påfyllningssprutan mot ventilen och pumpa in vätska, fig. 7. Trycks ventilkäglan för långt in kan den skadas och ventilen kan då bli otät.
3. Avlägsna eventuell luft ur motorn genom att lätt trycka sprutans spets mot ventilen.
4. Efterfyll med vätska efter avluftning, tills det kommer vätska i retur, eller korrekt membranläge uppnås (Franklin 4" och 6").
5. Montera filtret efter påfyllning.

Undervattenspumpen är nu klar för installation.

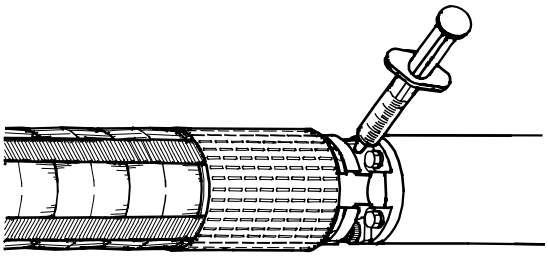

TM00 1354 5092

Fig. 7 Fyllningsventilens placering

3.1.6 Mercury undervattensmotorer

Kontroll av motorvätska görs som beskrivs för Franklin 8" motorer, se avsnitt *3.1.5 Franklin undervattensmotorer*.

3.1.7 Pleuger undervattensmotorer

Kontroll av motorvätska görs som beskrivs för Franklin 8" motorer, se avsnitt *3.1.5 Franklin undervattensmotorer*.

3.2 Placeringskrav

Skall pumpen installeras så att den är åtkomlig för beröring, skall kopplingsdelen avskärmas, t.ex. genom att montera pumpen i en kylmantel.

Beroende på motortyp kan pumpen installeras antingen vertikalt eller horisontalt. En komplett lista över de motortyper som är lämpade för horisontal installation visas i avsnitt *3.2.1*.

Om pumpen installeras horisontalt, **får** tryckstudsen **inte** komma under horisontalplanet, se fig. 8.

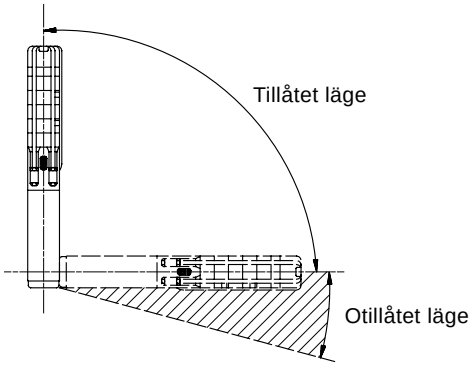

TM00 1355 5092

Fig. 8 Placeringskrav

Installeras pumpen horisontalt i en tank eller liknande, rekommenderas att den monteras i en kylmantel.

3.2.1 Motorer för horisontal installation

Motortyp	Effektstorlek 50 Hz	Effektstorlek 60 Hz
	[kW]	[kW]
MS	Alla storlekar	Alla storlekar
MMS 6000	3,7 till 18,5	3,7 till 18,5
MMS 8000	22,0 till 63,0	22,0 till 63,0
MMS 10000	75,0 till 110,0	75,0 till 110,0
MMS 12000	147,0 till 190,0	–

S

Om Franklin 4" undervattensmotorer upp till och med 2,2 kW startas mer än 10 ggr per dygn, rekommenderas att motorn monteras i en vinkel på minst 15° över horisontalplanet för att minska slitaget på axialtryckskivan.

OBS: Under drift skall pumpens inloppsdel alltid vara helt nedsänkt i vätskan.

Om pumpen skall användas till pumpning av varma vätskor (40°C till 60°C), bör pump och installation skärmas av för att på så sätt undvika att beröring är möjlig.

3.3 Pump-/motordiameter

Max. pump-/motordiameter framgår av tabellerna på sid. 146 och 147.

Kontroll av borrhålet med en håltolk rekommenderas för att vara säker på fri passage.

3.4 Vätsketemperatur/kylning

Max. vätsketemperatur och min. flödeshastighet av den pumpade vätskan förbi motorn framgår av följande tabell.

För att uppnå bästa kylning rekommenderas att motorn monteras ovanför borrhålsfiltret.

OBS: När den angivna flödeshastigheten inte kan uppnås, skall en kylmantel monteras.

Också när risk finns att slam, sand eller liknande byggs upp omkring motorn, skall kylmantel användas för att tillgodose motorns kylning.

3.4.1 Max. vätsketemperatur

Av hänsyn till gummidelarna i pump och motor får vätsketemperaturen ej överstiga 40°C (~105°F). Se även nedanstående tabell.

Drift vid vätsketemperaturer mellan 40°C och 60°C (~105°F och 140°F) är möjlig om alla gummidelar byts ut vart tredje år.

Motor	Installation		
	Flöde förbi motorn	Vertikal	Horisontal
Grundfos MS och MMS	Fri konvektion 0 m/s	20°C (~68°F)	Kylmantel rekommenderas
Grundfos MS	0,15 m/s	40°C (~105°F)	40°C (~105°F)
Grundfos MS I *	0,15 m/s	60°C (~140°F) Kylmantel rekommenderas	60°C (~140°F) Kylmantel rekommenderas
Grundfos MMS	0,15 m/s	25°C (~77°F)	25°C (~77°F)
Franklin 4"	0,08 m/s	30°C (~85°F)	30°C (~85°F)
Franklin 6" och 8"	0,16 m/s	30°C (~85°F)	30°C (~85°F)
Mercury	0,15 m/s	25°C (~77°F)	25°C (~77°F)
Pleuger	0,5 m/s	30°C (~86°F)	30°C (~86°F)

* Vid ett omgivningstryck på min. 1 bar (1 MPa).

OBS: Med fri konvektion avses, att borrhålets diameter är minst 2" större än undervattensmotorns diameter.

Andra motorfabrikat: Se motorns specifikation.

3.5 Röranslutning

Om resonansljud utgör ett problem, rekommenderas användning av plaströr.

OBS: Plaströr rekommenderas dock endast för 4"-pumpar.

Om plaströr används skall pumpen säkras med en avlastad vajer (se även avsnitt *5.8 Installationsdjup*).

Var uppmärksam på, att det plaströr som skall användas tål vätsketemperaturen och det tryck som pumpen ger.

Använd en kompressionskoppling mellan pump och plaströr.

4. Elanslutning

Innan arbete på pumpen påbörjas, kontrollera att nätspänningen är frånkopplad och att den inte oavsiktligt kan återinkopplas.

4.1 Allmänt

Den elektriska anslutningen skall utföras av en auktoriserad elinstallatör enligt lokalt gällande bestämmelser.

Matarspänning, max. märkström och cos φ framgår av medföljande dataskylt som **skall** fästas på installationsplatsen.

Erforderlig spänningskvalitet för Grundfos **MS** och **MMS** undervattensmotorer är –10%/+6% av nominell spänning vid kontinuerlig drift (inkl. variation i matarspänning och spänningsfall i kablar).

Det skall också vara spänningssymmetri, dvs. samma spänningsskillnad mellan de enskilda faserna. Se även avsnitt *9. Kontroll av motor och kablar*, punkt 2.

Pumpen skall anslutas till jord.

Pumpen skall anslutas via en extern huvudbrytare med ett kontaktavstånd på min. 3 mm för samtliga poler.

Om Grundfos MS-motorer med inbyggd temperaturtransmitter (Tempcon) inte installeras tillsammans med MP 204 eller liknande motorskydd från Grundfos, måste de anslutas till en kondensator på 0,47 μF, godkänd för inkoppling mellan faser (IEC 384-14), för att uppfylla EG:s EMC-direktiv (89/336/EEG). Kondensatorn ska anslutas mellan de två faser temperaturtransmittern är ansluten till, se fig. 9.

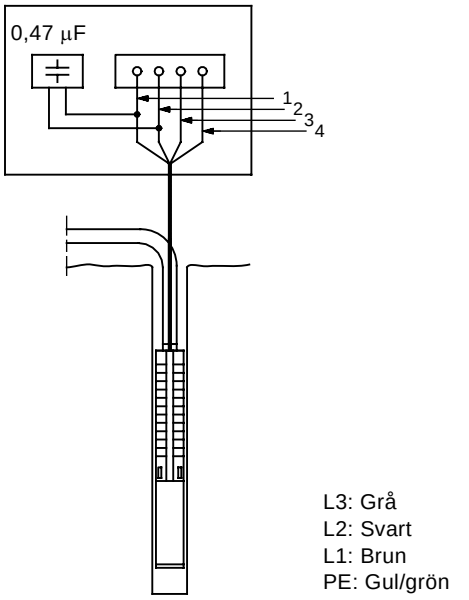

Fig. 9 Kondensatoranslutning

Motorerna är lindade för direktstart eller Y/Δ-start med en startström på 4-6 gånger motorns fullaststrom.

Pumpen når fullvarv på endast 0,1 sek. Direktstart godkänns därför normalt av elleverantören.

S

4.1.1 Frekvensomformardrift

Grundfos motorer

Grundfos 3-fasmotorer kan anslutas till en frekvensomformare.

OBS: Ansluts en Grundfos MS motor med temperaturtransmitter till en frekvensomformare, kommer en säkring i temperaturtransmittern att smälta och därmed sätts transmittern ur funktion. Transmittern kan ej aktiveras igen, så motorn kommer att fungera som en motor utan temperaturtransmitter.

Önskar man använda en temperaturtransmitter, kan en Pt100 sensor köpas hos Grundfos för montering på undervattensmotorn.

Vid frekvensomformardrift bör motorn inte tillföras en frekvens som överstiger den nominella (50 eller 60 Hz). I samband med pumpdrift är det viktigt att aldrig reglera frekvensen (och därmed hastigheten) lägre än att det ständigt finns erforderlig strömning av kylvätska förbi motorn.

För att undgå skada på pumpdelen skall det säkras att motorn stannar när pumpens flöde understiger 0,1 x nominellt flöde.

Vissa typer av frekvensomformare kan förorsaka att motorn utsätts för skadliga spänningstoppar.

Motorer av typ MS 402 med upp till 440 V matarspänning (se motorns märkplåt) skall skyddas mot spänningstoppar större än 650 V (toppvärde) mellan anslutningsplintarna.

För övriga motorer rekommenderas skydd mot spänningstoppar över 850 V.

Ovanstående olägenhet kan avhjälpas genom montering av ett **RC-filter** mellan frekvensomformaren och motorn.

Eventuellt ökat oljud från motorn kan avhjälpas genom att montera ett **LC-filter**, som även tar bort spänningstopparna från frekvensomformaren.

För närmare upplysningar, kontakta leverantören av frekvensomformaren eller Grundfos.

Andra motorfabrikat än Grundfos

Kontakta Grundfos eller motortillverkaren.

4.2 Motorskydd

4.2.1 1-fasmotorer

1-fas undervattensmotorer av typ MS 402 har inbyggd termobrytare och behöver inget ytterligare motorskydd.

När motorn är termiskt bruten finns det alltjämt spänning på motorns kopplingsplint.
När motorn är tillräckligt avkyld, återstartar den automatiskt.

1-fas undervattensmotorer av typ MS 4000 skall anslutas via ett motorskydd. Det kan vara antingen inbyggt i en manöverbox eller separat.

Franklin 4" PSC motorer skall anslutas via motorskydd.

4.2.2 3-fasmotorer

Grundfos **MS** motorer kan levereras med eller utan inbyggd temperaturtransmitter.

Motorer **med** inbyggd och funktionsduglig temperaturtransmitter skall skyddas med:

- ett motorskydd med termorelä eller
- en MTP 75 och ett motorskydd med termorelä eller
- en MP 204 och kontaktor(er).

Motorer **utan** eller med en **icke** fungerande temperaturtransmitter skall skyddas med:

- ett motorskydd med termorelä eller
- en MP 204 och kontaktor(er).

Grundfos **MMS** motorer har inte inbyggd temperaturtransmitter, men en Pt100 sensor kan beställas som tillbehör.

Motorer **med** Pt100 sensor skall skyddas med:

- ett motorskydd med termorelä eller
- en MP 204 och kontaktor(er).

Motorer **utan** Pt100 sensor skall skyddas med:

- ett motorskydd med termorelä eller
- en MP 204 och kontaktor(er).

4.2.3 Krav vid inställning av motorskydd

Motorskyddets utlösningstid med kall motor skall vara mindre än 10 sekunder vid 5 gånger motorns maximala märkström.

OBS: Om detta krav inte uppfylls, upphör motorns garanti att gälla.

För att ge undervattensmotorn bästa möjliga skydd skall motorskyddet ställas in enligt följande:

1. Ställ in motorskyddet på motorns märkström (se stämplingsdata).
2. Starta pumpen och låt den arbeta i en halv timma med normal kapacitet.
3. Vrid sakta ner värdet på skalan tills motorskyddet löser ut.
4. Öka motorskyddets inställning med 5%.

Högsta tillåtna inställning är motorns märkström.

Tillvägagångssättet för motorer med Y/Δ-start är det samma som ovan, men motorskyddets inställning får maximalt vara:

Motorskyddets inställning = maximal märkström x 0,58.

Högsta tillåtna starttid med Y/Δ-start eller med transformatorstart är 2 sekunder.

4.3 Åskskydd

Installationen kan utrustas med ett särskilt överspänningsskydd som skyddar motorn mot överspänningar i elnätet vid t.ex. åsknedslag, se fig. 10.

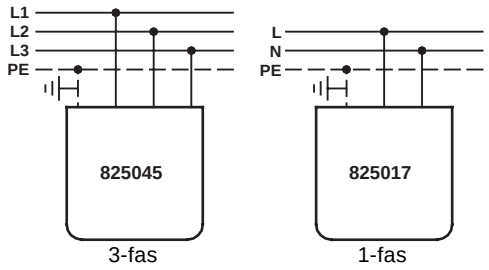

TM00 1357 3605

Fig. 10 Montering av överspänningsskydd

Överspänningsskyddet skyddar dock inte mot direkta åsknedslag i installationen.

Överspänningsskyddet ansluts så nära motorn som möjligt, i övrigt enligt gällande säkerhetsföreskrifter.
Grundfos kan leverera åskskyddsanordningar.

Undervattensmotor typ MS 402 har dock så hög isolationsnivå att ytterligare åskskydd är onödigt.

Till Grundfos 4" undervattensmotor kan levereras en särskild kabelsats med inbyggt överspänningsskydd (res.delnr. 799911 / 799912).

4.4 Val av undervattenskabel

Undervattenskabeln skall tåla att vara permanent nedsänkt i den aktuella vätskan och vid den aktuella temperaturen.

Grundfos kan leverera undervattenskablar till ett brett område av installationer.

Följande krav ställs på undervattenskabelns tvärsnittsarea (q):

1. Undervattenskabeln skall vara dimensionerad efter motorns maximala märkström (I).
2. Tvärsnittsarean skall vara så stor att spänningsfallet över kabeln blir acceptabelt.

Det största av de i punkt 1. och 2. funna värdena för tvärsnittsarea skall användas.

S

Anm. 1: Följande tabell anger strömvärden för Grundfos undervattenskablar (dvs. den maximala ström som kabeln tål) vid en omgivningstemperatur av max. 30°C.
Kontakta Grundfos om omgivningstemperaturen överstiger 30°C.

Undervattenskabeln väljs så att motorns märkström (se stämplingsdata) inte överstiger strömvärdet (I_S).

Vid Y/Δ-start väljs dock kablarna så att 0,58 x motorns märkström inte överstiger kablarnas strömvärde (I_S).

q [mm²]	I_S [A]	q [mm²]	I_S [A]
1,5	18,5	50	153
2,5	25	70	196
4	34	95	238
6	43	120	276
10	60	150	319
16	80	185	364
25	101	240	430
35	126	300	497

Om Grundfos undervattenskablar inte används, skall tvärsnittsarea väljas med utgångspunkt från de aktuella kablarnas strömvärde.

Anm. 2:
OBS: Undervattenskabelns tvärsnittsarea skall väljas så att kraven för motorernas spänningskvalitet följs, se avsnitt *4.1 Allmänt*.

Undervattenskabelns tvärsnittsarea bestäms med hänsyn till det spänningsfall som beräknas med hjälp av diagrammen på sidorna 148 och 149, där

I = Motorns märkström.
Vid Y/Δ-start är
I = motorns märkström x 0,58.

Lx = Kabelns längd omräknad till spänningsfall på 1% av nominell spänning:

$$Lx = \frac{\text{undervattenskabelns längd}}{\text{tillåtet spänningsfall i \%}}$$

q = Undervattenskabelns tvärsnittsarea.

Mellan det aktuella I-värdet och Lx-värdet dras en rät linje. Där linjen skär q-axeln väljs den tvärsnittsarea som ligger rakt ovanför skärningspunkten.

Diagrammen härleds ur formlerna:

1-fas undervattensmotor

$$L = \frac{U \times \Delta U}{I \times 2 \times 100 \times \left(\cos\varphi \times \frac{\rho}{q} + \sin\varphi \times XI\right)}$$

3-fas undervattensmotor

$$L = \frac{U \times \Delta U}{I \times 1{,}73 \times 100 \times \left(\cos\varphi \times \frac{\rho}{q} + \sin\varphi \times XI\right)}$$

där

L = Kabelns längd [m]
U = Märkspänning [V]
ΔU = Spänningsfall [%]
I = Motorns märkström [A]
cos φ = 0,9
ρ = Specifikt motstånd: 0,02 [Ωmm²/m]
q = Kabelns tvärsnittsarea [mm²]
sin φ = 0,436
Xl = Induktivt motstånd: 0,078 x 10^{-3} [Ω/m]

4.5 Styrning av 1-fasmotor MS 402

1-fasmotorn MS 402 har ett inbyggt motorskydd som utlöses vid för hög lindningstemperatur, men spänningsförsörjningen till motorn bryts ej. Detta måste uppmärksammas när motorn ingår i en styrning.

Om exempelvis en kompressor är sammankopplad med ett järnoxidfilter i ett system fortsätter kompressorn att gå när motorskyddet löst ut, om inte särskilda anordningar gjorts.

4.6 Anslutning av 1-fasmotorer

4.6.1 Motorer i 2-ledarutförande

Grundfos MS 402 i 2-ledarutförande har inbyggt motorskydd och startanordning och kan därför anslutas direkt till nätet, se fig. 11.

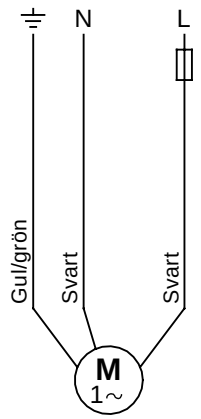

TM00 1358 5092

Fig. 11 Motorer i 2-ledarutförande

4.6.2 PSC motorer

PSC motorer ansluts till nätet via en driftkondensator som skall vara dimensionerad för kontinuerlig drift.

Rätt kondensatorstorlek väljs enligt följande tabell:

Motor	Kondensator
0,25 kW	12,5 µF / 400 V / 50 Hz
0,37 kW	16 µF / 400 V / 50 Hz
0,55 kW	20 µF / 400 V / 50 Hz
0,75 kW	30 µF / 400 V / 50 Hz
1,10 kW	40 µF / 400 V / 50 Hz
1,50 kW	50 µF / 400 V / 50 Hz
2,20 kW	75 µF / 400 V / 50 Hz

Grundfos motor MS 402 PSC har inbyggt motorskydd och ansluts till nätet så som visas i fig. 12.

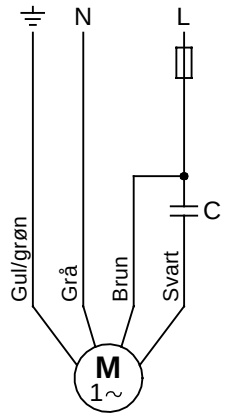

TM00 1359 5092

Fig. 12 PSC motorer

S

Se www.franklin-electric.com och fig. 13.

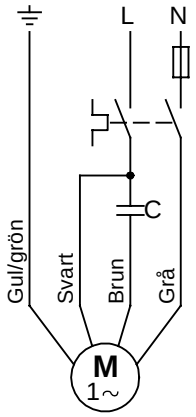

TM00 1361 1200

Fig. 13 Franklin undervattensmotorer

4.6.3 Motorer i 3-ledarutförande

Grundfos motorer MS 4000 i 3-ledarutförande skall anslutas till nätet via Grundfos startapparat SA-SPM 2 eller 3 med inbyggt motorskydd.

Grundfos motorer MS 402 i 3-ledarutförande har inbyggt motorskydd och skall anslutas till nätet via Grundfos startapparat SA-SPM 2 eller 3 utan motorskydd.

Anslutningen av MS 4000 och MS 402 framgår av följande tabell:

Motor	Kabel	Startapparat	Nät
T.o.m. 0,75 kW	Grå Brun Svart Gul/grön	1 N 2 L 3 SA-SPM 2	N L PE
Från 1,10 kW	Grå Brun Svart Gul/grön	1 N 2 L 3 SA-SPM 3	N L PE

4.7 Anslutning av 3-fasmotorer

3-fas undervattensmotorer skall skyddas, se avsnitt *4.2.2 3-fasmotorer*.

Angående elanslutning via kontrollenheten MP 204 hänvisas till särskild monterings- och driftsinstruktion för denna enhet.

Vid användning av ett traditionellt motorskydd skall elanslutningen utföras enligt följande beskrivning.

4.7.1 Kontroll av rotationsriktning

OBS: Pumpen får endast startas när pumpens inloppsdel är nedsänkt i pumpvätskan.

När pumpen har anslutits till nätet, kontrolleras rätt rotationsriktning på följande sätt:

1. Starta pumpen och kontrollera vattenmängden och mät trycket.
2. Stoppa pumpen och låt två av fasledarna byta plats. Vid motorer med Y/Δ-start byts U1 med V1 och U2 med V2.
3. Starta pumpen och kontrollera vattenmängden och mät trycket.
4. Stoppa pumpen.
5. Jämför resultaten under punkt 1 och 3. Den anslutning som ger mest vatten eller högst tryck anger rätt rotationsriktning.

4.7.2 Grundfos motorer, direktstart

Anslutning av Grundfos undervattensmotorer lindade för direktstart framgår av följande tabell och fig. 14.

Nät	Kabel/anslutning
	Grundfos 4" och 6" motorer
PE	PE (gul/grön)
L1	U (brun)
L2	V (svart)
L3	W (grå)

Kontrollera rotationsriktningen enligt beskrivning i avsnitt *4.7.1 Kontroll av rotationsriktning*.

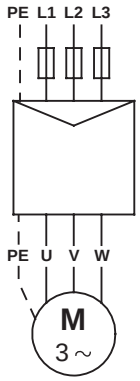

TM03 2099 3705

Fig. 14 Grundfos motorer, direktstart

4.7.3 Grundfos motorer, Y/Δ-start

Anslutning av Grundfos undervattensmotorer lindade för Y/Δ-start framgår av följande tabell och fig. 15.

Anslutning	Grundfos 6" motorer
PE	Gul/grön
U1	Brun
V1	Svart
W1	Grå
W2	Brun
U2	Svart
V2	Grå

Kontrollera rotationsriktningen enligt beskrivning i avsnitt *4.7.1 Kontroll av rotationsriktning*.

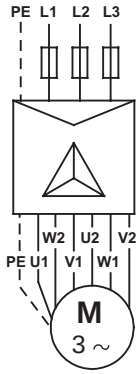

TM03 2100 3705

Fig. 15 Grundfos motorer, Y/Δ-start

S

Om man inte vill använda Y/Δ-start, ansluts motorn för direktstart, så som visas i fig. 16.

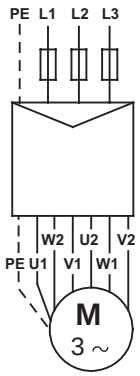

TM03 2101 3705

Fig. 16 Grundfos motorer, direktstart

4.7.4 Anslutning med okänd kabelmärkning/anslutning

Om man inte vet hur de enskilda ledarna skall anslutas för rätt rotationsriktning görs följande:

Motorer lindade för direktstart

Pumpen ansluts till nätet.

Därefter kontrolleras rotationsriktningen enligt beskrivning i avsnitt *4.7.1 Kontroll av rotationsriktning*.

Motorer lindade för Y/Δ-start

Motorns lindningar bestäms med hjälp av en Ohm-mätare, och därefter benämns ledarparen till de enskilda lindningarna med t.ex. U1-U2, V1-V2 och W1-W2, se fig. 17.

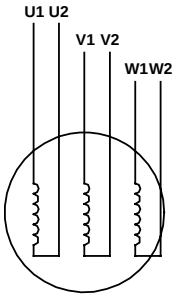

TM00 1367 5092

Fig. 17 Oidentifierad kabelmarkering/anslutning – motorer lindade för Y/Δ-start

Önskas Y/Δ-start, ansluts ledarna så som visas i fig. 15.

Önskas direktstart, ansluts ledarna så som visas i fig. 16.

Därefter kontrolleras rotationsriktningen enligt beskrivning i avsnitt *4.7.1 Kontroll av rotationsriktning*.

4.7.5 Franklin, Mercury och Pleuger motorer

Anslutning av Franklin, Mercury och Pleuger undervattens-motorer framgår av avsnitt *4.7.4 Anslutning med okänd kabel-märkning/anslutning*.

S

5. Pumpinstallation

Innan arbete på pumpen/motorn påbörjas, kontrollera att nätspänningen är frånkopplad och att den inte oavsiktligt kan återinkopplas.

5.1 Montering av motor på pump

När pumpdel och motor levereras som separata enheter (långa pumpar), montera ihop motorn med pumpdelen enligt följande:

1. Använd rörklammor vid hantering av motorn.
2. Placera motorn i vertikalt läge vid borrhålstätningen, se fig. 18.

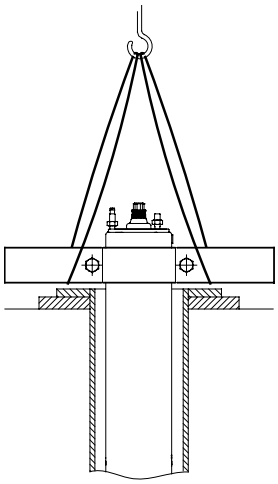

TM00 5259 2402

Fig. 18 Motor i vertikal position

3. Lyft pumpdelen i rörklammorna monterade på utloppsröret, se fig. 19.

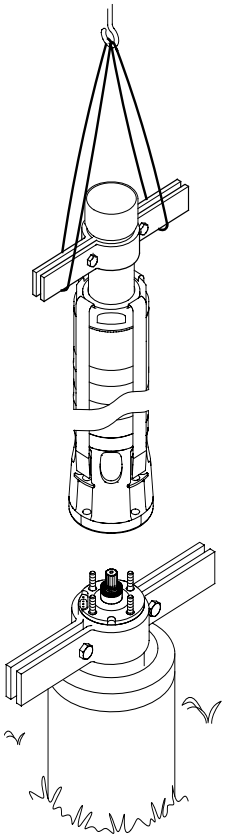

TM02 5263 2502

Fig. 19 Lyft pumpen på plats

4. Placera pumpdelen ovanpå motorn.
5. Passa in och dra åt bultarna, se följande tabell.

De bultar och muttrar som fäster pumpens spännband skall spännas korsvis till de moment som anges i följande tabell:

Spännband Bult/mutter	Moment [Nm]
M8	18
M10	35
M12	45
M16	120
SP 215, 50 Hz, med fler än 8 steg SP 215, 60 Hz, med fler än 5 steg	150

OBS: Kontrollera att kopplingen mellan pump och motor passas in och monteras korrekt.

När motor och pumpdel monteras ihop skall muttrarna dras åt korsvis till de moment som anges i följande tabell:

Pump/motor Stödbultsdiameter	Moment [Nm]
M8	18
M12	70
M16	150
M20	280

OBS: Kontrollera att pumpens kamrar är raka (ej skeva) efter montering av pump och motor.

5.2 Demontering/montering av kabelskydd

Betr. demontering och montering av kabelskydd, se sid. 150 och 151.

Om kabelskyddet är fastskruvat på pumpen, t.ex. på SP 215 och mantlade pumpar, demonteras/monteras kabelskyddet med hjälp av skruvarna.

OBS: Kontrollera att pumpens kamrar är raka (ej skeva) efter montering av kabelskydd.

5.3 Montering av undervattenskabel

5.3.1 Grundfos undervattensmotorer

Vid montering av undervattenskabeln till motorn skall det kontrolleras att kabelns stickkontakt är ren och torr.

För att underlätta monteringen bör stickkontaktens gummidelar smörjas med icke-ledande silikonpasta.

Skruvarna som fäster kabeln spänns till följande moment:

MS 402: 2,0 Nm.
MS 4000: 2,0 Nm.
MS 6000: 4,0-5,0 Nm.
MMS 6000: 10 Nm.
MMS 12000: 15 Nm.

5.4 Röranslutning

Skall verktyg användas vid montering av tryckröret, t.ex. en rörtång för att hålla fast pumpen, får denna endast anbringas på pumpens toppstycke.

Gängade delar av stigarröret skall ha välskurna gängor som efter åtdragning säkrar att skarvarna inte lossnar p.g.a. de vridmoment som uppstår vid start/stopp av pumpen.

Den gängade del som skruvas i pumpen får inte vara längre än pumpens anslutningsgänga.

Om resonansljud utgör ett problem, rekommenderas användning av plaströr.

OBS: Plaströr rekommenderas dock endast för 4"-pumpar.

Om plaströr används, skall pumpen säkras med en avlastad vajer som fästs i pumpens toppstycke, se fig. 20.

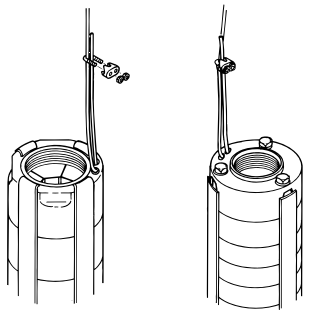

Fig. 20 Montering av säkerhetsvajer

Använd en kompressionskoppling mellan pump och plaströr.

Om flänsrör används, bör flänsarna ha urtag för undervattenskabeln och eventuell pejlslang.

5.5 Max. installationsdjup under vattenytan

Grundfos MS 402: 150 m.
Grundfos MS 4000: 600 m.
Grundfos MS 6000: 600 m.
Grundfos MMS: 250 m.
Franklin motorer: 350 m.
Mercury motorer: 350 m.
Pleuger motorer: 350 m.

5.6 Kabelklammer

Kabelklammer skall användas var 3:e meter för att fästa undervattenskabeln och eventuell vajer vid pumpens stigarrör.

Grundfos kan leverera klammersatser. Satsen består av ett 1,5 mm tjockt gummiband + 16 st. låsknappar.

Montering: Klipp av gummibandet så att stycket utan slits blir så långt som möjligt.
Sätt en låsknapp i första slitsen.
Placera vajern längs undervattenskabeln, fig. 21.

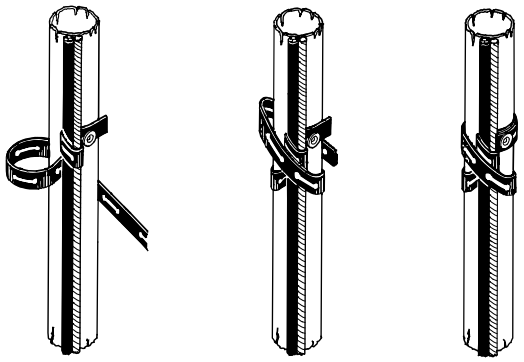

Fig. 21 Montering av kabelklammer

Linda gummibandet en gång runt vajern och undervattenskabeln.
Linda därefter bandet stramt minst två gånger runt rör, vajer och undervattenskabel.
Tryck ner slitsen över låsknappen och klipp av bandet.

Vid grövre kablar är det nödvändigt att linda bandet flera varv.

Används plaströr skall undervattenskabeln ha ett visst slack mellan varje klammer eftersom plaströren förlängs vid belastning.

Används flänsrör sätts dessutom klammer ovanför och under varje skarv.

5.7 Sänkning av pumpen

Före sänkning av pumpen rekommenderas kontroll av borrhålet med en håltolk för att säkra fri passage.

Sänk ned pumpen försiktigt i borrhålet så att motorkabeln och undervattenskabeln inte skadas.

OBS: Lyft inte pumpen i motorkabeln.

S

5.8 Installationsdjup

Den dynamiska vattenytan skall alltid vara över pumpens inloppsdel, se avsnitt *3.2 Placeringskrav* och fig. 22.

Min. tilloppstryck finns angivet i pumpens NPSH kurva.
Min. säkerhetstillägg bör vara 1,0 mvp.

Det rekommenderas att pumpen monteras så att motordelen befinner sig ovanför borrhålsfiltret för att uppnå bästa kylning, enligt avsnitt *3.4 Vätsketemperatur/kylning*.

När pumpen nått önskat djup, bör den säkras med ett borrlock.

Slacka säkerhetsvajern så mycket att den är obelastad och fäst sedan vajern med ett vajerlås i borrlocket.

OBS: Om plaströr monterats på pumpen, skall vid beräkning av djupläget hänsyn tas till rörens förlängning vid belastning.

6. Igångkörning och drift

6.1 Igångkörning

När pumpen är rätt inkopplad och nedsänkt i pumpvätskan, startas den med avstängningsventilen öppnad till ca. 1/3 av maximal kapacitet.

Rotationsriktningen skall kontrolleras enligt beskrivning i avsnitt *4.7.1 Kontroll av rotationsriktning*.

Om det finns föroreningar i vattnet, öppnas ventilen gradvis vartefter som vattnet blir rent. Pumpen får inte stannas förrän vattnet är helt rent, eftersom det annars finns risk att pumpdelarna och backventilen täpps igen.

Samtidigt som ventilen öppnas till önskad kapacitet, kontrollera vattennivåns sänkning för att undvika eventuell torrkörning.

Den dynamiska vattenytan skall alltid vara över pumpens inloppsdel i enlighet med avsnitt *3.2 Placeringskrav* och fig. 22.

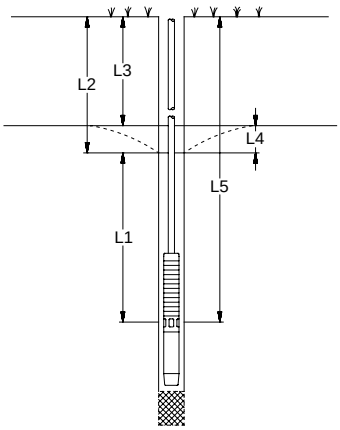

Fig. 22 Jämförelse mellan olika vattennivåer

L1: Minsta installationsdjup under dynamisk vattenyta. Rekommenderas: minst 1 meter.

L2: Djup till dynamisk vattenyta.

L3: Djup till statisk vattenyta.

L4: Avsänkning. Skillnad mellan dynamisk och statisk vattenyta.

L5: Installationsdjup.

Om pumpen pumpar mer vatten än borrhålet ger, rekommenderas användning av Grundfos kontrollenhet typ MP 204 eller någon annan form av torrkörningsskydd.

Utan torrkörningsskydd finns risk för att vattennivån sänks till pumpens inloppsdel så att luft sugs in.

OBS: Längre tids drift med luft i vattnet kan skada pumpen och försämrar motorns kylning.

6.2 Drift

6.2.1 Minsta flöde

Med hänsyn till motorkylningen får pumpens kapacitet inte ställas lägre än att kylningskraven i avsnitt *3.4 Vätsketemperatur/kylning* tillgodoses.

6.2.2 Start/stopp-intervall

Motortyp	Antal starter
MS 402	Min. 1 per år rekommenderas. Max. 100 per timma. Max. 300 per dygn.
MS 4000	Min. 1 per år rekommenderas. Max. 100 per timma. Max. 300 per dygn.
MS 6000	Min. 1 per år rekommenderas. Max. 30 per timma. Max. 300 per dygn.
MMS 6000	Min. 1 per år rekommenderas. Max. 15 per timma. Max. 360 per dygn.
MMS 8000	Min. 1 per år rekommenderas. Max. 10 per timma. Max. 240 per dygn.
MMS 10000	Min. 1 per år rekommenderas. Max. 8 per timma. Max. 190 per dygn.
MMS 12000	Min. 1 per år rekommenderas. Max. 5 per timma. Max. 120 per dygn.
Franklin	Min. 1 per år rekommenderas. Max. 100 per dygn.
Mercury 6"	Min. 1 per år rekommenderas. Max. 20 per timma.
Mercury 8"	Min. 1 per år rekommenderas. Max. 15 per timma.
Mercury 10"	Min. 1 per år rekommenderas. Max. 10 per timma.
Mercury 12"	Min. 1 per år rekommenderas. Max. 6 per timma.
Pleuger	Min. 1 per år rekommenderas. Max. 100 per dygn.

7. Underhåll och service

Pumparna är underhållsfria.

Alla pumpar är lätta att serva.

Grundfos levererar servicesatser och serviceverktyg till pumparna.

Pumpservice kan utföras på en Grundfos serviceverkstad.

Om en pump använts till en vätska som är hälsovådig eller giftig, klassificeras den som förorenad.

Om service hos Grundfos önskas för en sådan pump, skall Grundfos kontaktas och upplysningar lämnas om pumpvätskan m.m. *innan* pumpen lämnas in för service. I annat fall kan Grundfos neka att ta emot pumpen för service.

Eventuella kostnader i samband med returneringen av pumpen erläggs av kunden.

S

8. Felsökning

Fel	Orsak	Åtgärd
1. Pumpen går inte.	a) Säkringar brända.	Byt säkringar. Om även de nya säkringarna bränner kontrolleras elinstallationen och undervattenskabeln.
	b) HFI-relä, FI-relä eller felspänningsbrytare har löst ut.	Återställ reläet eller brytaren.
	c) Strömförsörjningen bruten.	Kontakta elleverantõren.
	d) Motorskyddet har löst ut.	Återställ motorskyddet (sker automatiskt eller utförs manuellt). Om skyddet åter utlöses, kontrollera spänningen. Om spänningenär riktig, se punkterna e) - h).
	e) Motorskydd/kontaktor defekt.	Byt motorskydd/kontaktor.
	f) Startanordningen defekt.	Reparera/byt startanordning.
	g) Manöverströmkretsen är bruten eller defekt.	Kontrollera elinstallationen.
	h) Torrkörningsskyddet har brutit spänningen till pumpen p.g.a. för låg vattennivå.	Kontrollera vattennivån. Om den är rätt, kontrollera torrkörningsskyddet.
	i) Pump/undervattenskabel defekt.	Reparera/byt pumpen/kabeln.
2. Pumpen går, men ger inget vatten.	a) Utloppsventilen är stängd.	Öppna ventilen.
	b) Inget vatten eller för låg vattennivå i borrhålet.	Se punkt 3 a).
	c) Backventilen blockerad i stängt läge.	Tag upp pumpen och rengör eller byt backventilen.
	d) Inloppssilen igentäppt.	Tag upp pumpen och rengör inloppssilen.
	e) Pumpen defekt.	Reparera/byt pumpen.
3. Pumpen går med nedsatt kapacitet.	a) Vattennivån sjunker snabbare än beräknat.	Öka pumpdjupet, reducera pumpkapaciteten eller byt till en pump med lägre kapacitet.
	b) Fel rotationsriktning.	Se avsnitt *4.7.1 Kontroll av rotationsriktning*.
	c) Ventilerna i utloppsledningen delvis stängda/blockerade.	Kontrollera och rengör, ev. byt ventilerna.
	d) Utloppsledningen delvis igentäppt av föroreningar.	Rensa/byt utloppsledning.
	e) Backventilen i pumpen delvis blockerad.	Tag upp pumpen, rengör/byt backventilen.
	f) Pump och stigarrör delvis igentäppt av föroreningar.	Tag upp pumpen. Kontrollera och rengör, ev. byt pumpen. Rensa rören.
	g) Pumpen defekt.	Reparera/byt pumpen.
	h) Läckage i rörinstallationen.	Kontrollera och reparera rörinstallationen.
	i) Stigarröret defekt.	Byt stigarröret.
4. Täta starter och stopp.	a) Inställd differens mellan tryckbrytarens start- och stopptryck för liten.	Öka differensen. Stopptrycket får dock ej överstiga hydroforens arbetstryck, och starttrycket måsta vara så högt att tillräcklig vattenförsörjning säkras.
	b) Det automatiska nivåkontrollen eller nivåbrytaren i reservoaren är inte rätt installerade.	Justera avstånden för elektroder/nivåbrytare så att lämpliga tider mellan pumpens in- och urkoppling erhålls. Se monterings- och driftsinstruktioner för den använda automatiken. Om intervallerna för stopp/start inte kan ändras via automatiken, kan pumpens kapacitet ev. reduceras med utloppsventilen.
	c) Backventilen otät eller har fastnat i halvöppet läge.	Tag upp pumpen, rengör eller byt backventilen.
	d) Luftvolymen i hydrofor/membranbehållare för liten.	Justera luftvolymen i hydroforen/membranbehållaren enligt monterings- och driftsinstruktioner för denna.
	e) Hydrofor/membranbehållare för liten.	Öka behållarkapaciteten genom byte eller komplettering.
	f) Membranen i membranbehållaren defekt.	Kontrollera membranbehållaren.

S

9. Kontroll av motor och kablar

1. Nätspänning 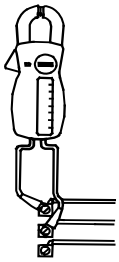 TM00 1371 5092	Mät spänningen mellan faserna med voltmeter. För 1-fasmotor, mät mellan fas och nolla eller mellan två faser, beroende på nättyp. Voltmetern ansluts till anslutningens kopplingsplintar.	Spänningen vid belastning skall ligga inom det område som anges i avsnitt *4.1 Allmänt*. Större spänningsvariationer kan orsaka att motorn bränns. Större variationer i nätspänningen tyder på fel i strömförsörjningen, och pumpen bör stannas tills felet är avhjälpt.
2. Strömförbrukning 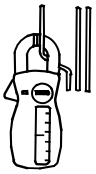 TM00 1372 5092	Mät strömmen i varje fas. Mätningen skall göras medan pumpen går med ett konstant utloppstryck (om möjligt med en kapacitet, där motorn är som mest belastad). Max. driftsström framgår av märkplåten.	För 3-fasmotorer skall skillnaden mellan fasen med den högsta och fasen med den lägsta strömforbrukningen inte överstiga 5%. Gör den det, eller om den maximala driftsströmmen överskrids, kan det bero på: • Motorskyddets kontakter är brända. Byt kontakter eller, vid 1-fasdrift, startapparaten. • Dålig ledningsförbindelse, ev. i kabelskarvar. Se punkt 3. • För hög eller för låg nätspänning. Se punkt 1. • Motorlindningar kortslutna eller delvis brutna. Se punkt 3. • Skadad pump överbelastar motorn. Tag upp pumpen för översyn. • För stor skillnad mellan motståndsvärdena för motorns lindningar (3-fas). Flytta faserna i fasföljd tills belastningen blir jämnare. Om detta inte hjälper, se punkt 3.
Punkt 3 och 4 är inte aktuella när nätspänning och strömforbrukning är normal.		
3. Lindningsmotstånd 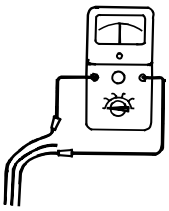 TM00 1373 5092	Koppla bort undervattenskabeln från nätet. Mät lindningsmotståndet mellan ledarna i kabeln.	I 3-fasmotorer får skillnaden mellan högsta och lägsta värde inte överstiga 10%. Är avvikelsen högre än den tillåtna, tas pumpen upp. Motor, motorkabel och undervattenskabel mäts var för sig, och defekta delar repareras/byts. **OBS:** I 1-fas motorer i 3-ledarutförande kommer driftslindningen att anta det lägsta motståndsvärdet.
4. Isolationsmotstånd 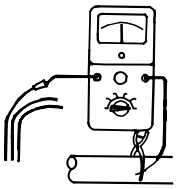 TM00 1374 5092	Koppla bort undervattenskabeln från nätet. Mät isolationsmotstånden mellan varje fas och jord. Kontrollera att jordförbindelsen är rätt utförd.	Om isolationsmotståndet är under 0,5 MΩ, tas pumpen upp för reparation av motor eller kabel. Lokalt gällande regler kan fastställa andra värden för isolationsmotstånden.

S

10. Destruktion

Destruktion av denna produkt eller delar härav ska ske på ett miljövänligt vis:

1. Använd offentliga eller privata återvinningsstationer.
2. Om detta inte är möjligt, kontakta närmaste Grundfosbolag eller -serviceverkstad.

SISÄLLYSLUETTELO

Nämä asennus- ja käyttöohjeet on luettava huolellisesti ennen asennusta. Asennuksen ja käytön tulee muilta osin noudattaa paikallisia asetuksia ja seurata yleistä käytäntöä.

Tämä ohje käsittää Grundfos uppopumput tyyppiä SP ja uppomoottorit tyypeiltään Grundfos MS ja MMS, Franklin 4"-8", Mercury 6"-12" ja Pleuger 6"-12".

Jos pumppu on varustettu muulla moottorilla kuin Grundfos-valmisteisella, on huomioitava, että moottoria koskevat tekniset tiedot voivat olla tästä ohjeesta poikkeavia.

1. Toimitus ja varastointi

1.1 Toimitus

Grundfos uppopumput toimitetaan tehtaalta pakkauksissa, joissa pumput tulee säilyttää asennukseen asti.

Pakkausta purettaessa on huomioitava, että taivutukset voivat aikaansaada epäsuoruutta ja vahinkoa pumppuyksikölle.

Huom. Pumput on pidettävä pakkauksissaan kunnes ne asetetaan pystysuoraan asennettaessa.
Jos pumppuosa ja moottori on toimitettu eri yksikköinä (pitkät pumput), asenna moottori pumppuun kohdassa *5.1 Moottorin asennus pumppuun* kuvatulla tavalla.

Huom. Pumpun mukana seuraava ylimääräinen laitekilpi tulee asentaa asennuspaikalle.

Pumppua ei saa kolhia ja ravistella.

1.2 Varastointi ja käsittely

Varastointilämpötila

Pumppu: –20°C ... +60°C.
Moottori: –20°C ... +70°C.

Moottorit on varastoitava suljetussa ja kuivassa tilassa, jossa on hyvä ilmanvaihto.

Huom. Jos MMS-tyypin moottori aiotaan varastoida yli vuoden ajaksi, on moottoriakselia pyöräytettävä käsin vähintään kerran kuukaudessa.
Jos moottori on ollut varastossa yli vuoden ennen asennusta, on moottorin pyörivät osat purettava ja tarkistettava ennen käyttöönottoa.

Varastointia suorassa auringonpaisteessa on vältettävä.

Kun pumppu on purettu pakkauksesta, sitä säilytetään vaaka-suorassa asennossa tukien päällä tai pystysuoraan niin, että pumppuun ei synny vinojännityksiä. On varottava, että se ei kaadu, pyöri tai kolhiinnu. Varastoitaessa pumppu voidaan tukea kuvan 1 mukaisesti.

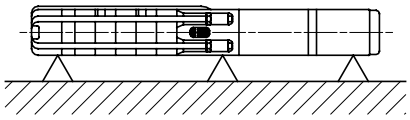

Kuva 1 Pumpun asento varastoinnin aikana

1.2.1 Jäätymissuojaus

Kun pumppu varastoidaan käytön jälkeen, on sitä säilytettävä jäätymättömissä tiloissa, tai on varmistettava, että moottorineste kestää jäätymisen.

2. Yleistä

2.1 Käyttö

Grundfos uppopumpuilla, malli SP, on laaja käyttöalue vesihuollossa ja nesteensiirrossa kuten pohjavesipumppaus asuntoja ja vesilaitoksia varten, puutarhojen tai maatalouksien vesihuolto, pohjaveden alentaminen ja paineenkorotus sekä erilaiset teollisuuden tarpeet.

Pumput on asennettava vedenpinnan alle upoksiin ja niitä voidaan käyttää sekä vaaka- että pystysuoraan, katso myös jaksosta *3.2 Tilantarve*.

2.2 Pumpattavat nesteet

Puhtaat ja kevytjuoksuiset, **räjähtämättömät** nesteet, jotka eivät sisällä kiintoaineita eikä kuituja.

Veden hiekkapitoisuus ei saa ylittää 50 g/m^3. Suurempi hiekkapitoisuus alentaa pumpun käyttöikää ja lisää tukkeutumisen vaaraa.

Huom. Jos pumppua käytetään vettä raskaamman nesteen pumppaamiseen, on käytettävä vastaavasti tehokkaampaa moottoria.

Kun halutaan pumpata nesteitä, joiden viskositeetti on korkeampi kuin veden, on otettava yhteys Grundfos'iin.

Jos pumpattava neste on syövyttävämpää kuin juomavesi, käytetään erikoismalleja SP A N, SP A R, SP N, SP R ja SPE.

Korkein nestelämpötila ilmeneen jaksosta *3.4 Nestelämpötila/jäähdytys*.

FIN

2.3 Äänenpainetaso

Äänenpainetaso on mitattu EU:n konedirektiivin 98/37 määrittelemien sääntöjen mukaisesti.

Pumppujen äänenpainetaso

Koskee veteen upotettuja pumppuja ilman ulkoista säätöventtiiliä.

Pumppu	$\overline{L}_{pA}$ [dB(A)]
SP 1A	<70
SP 2A	<70
SP 3A	<70
SP 5A	<70
SP 8A	<70
SP 14A	<70
SP 17	<70
SP 30	<70
SP 46	<70
SP 60	<70
SP 77	<70
SP 95	<70
SP 125	79
SP 160	79
SP 215	82

Moottoreiden äänenpainetaso

Grundfos MS ja MMS moottoreiden äänenpainetaso on alhaisempi kuin 70 dB(A).

Muut moottorivalmisteet: Katso k.o. moottoreiden asennus- ja käyttöohjeista.

3. Valmistelu

Ennenkuin mihinkään toimenpiteisiin ryhdytään, on varmistettava, että syöttöjännite on katkaistu ja että sitä ei epähuomiossa voida kytkeä.

3.1 Moottorinesteen tarkistus

Uppomoottorit on tehtaalla täytetty myrkyttömällä erikoisnesteellä, jonka jäätymiskestävyys on –20°C.

Huom. Nestetäyttö on tarkistettava ja tarvittaessa on suoritettava jälkitäyttö.

Huom. Kun moottorineste on poistettu, tulee jäätymisvaaran takia täyttöön käyttää Grundfos erikoisnestettä. Jälkitäyttöön voidaan käyttää puhdasta vettä (**ei** kuitenkaan tislattua vettä).

Jälkitäyttö suoritetaan seuraavien ohjeiden mukaan.

3.1.1 Grundfos uppomoottorit tyyppi MS 4000 ja MS 402

Moottorinesteen täyttöaukko sijaitsee:

MS 4000: moottorin päällä.

MS 402: moottorin pohjassa.

1. Uppopumppu asetetaan kuvan 2 mukaiseen asentoon. Täyttöruuvin tulee olla moottorin korkein kohta.
2. Avaa täyttöaukon ruuvi.
3. Ruiskuta nestettä moottoriin täyttöaukon kautta täyttöruiskun avulla, kuva 2, kunnes nestettä purkautuu ulos moottoriakselin juuresta.
4. Asenna ja kiristä täyttöaukon ruuvi ennenkuin pumpun asentoa muutetaan.

Kiristysmomentit:

MS 4000: 3,0 Nm.

MS 402: 2,0 Nm.

Uppopumppu on nyt asennusvalmis.

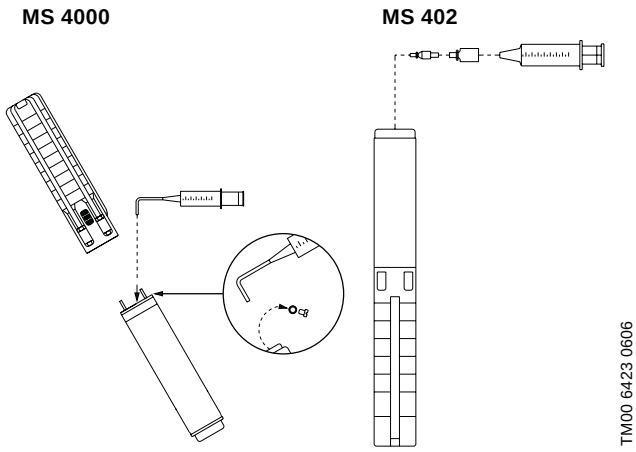

Kuva 2 Pumpun asento täytön aikana – MS 4000 ja MS 402

3.1.2 Grundfos uppomoottorit tyyppi MS 6000

- Kun moottori on toimitettu varastotoimituksena, on moottorin nestepinta tarkistettava ennen pumppuun asentamista, katso kuva 3.
- Suoraan Grundfos'ilta toimitetuissa pumpuissa nestepinta on tarkistettu.
- Huoltotoimenpiteiden yhteydessä nestepinta tulee aina tarkistaa, katso kuva 3.

Täyttäminen:

Moottorinesteen täyttöaukko sijaitsee ylinnä moottorissa.

1. Uppopumppu asetetaan kuvan 3 mukaiseen asentoon. Täyttöruuvin tulee olla moottorin korkein kohta.
2. Avaa täyttöaukon ruuvi.
3. Ruiskuta nestettä moottoriin täyttöaukon kautta täyttöruiskun avulla, kuva 3, kunnes nestettä purkautuu ulos moottoriakselin juuresta.
4. Asenna ja kiristä täyttöaukon ruuvi ennenkuin pumpun asentoa muutetaan.

Kiristysmomentit: 3,0 Nm.

Uppopumppu on nyt asennusvalmis.

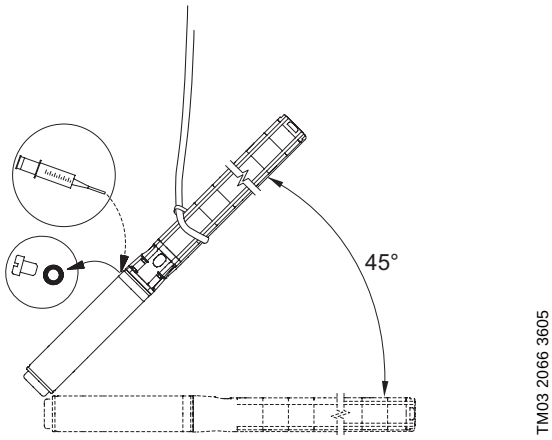

Kuva 3 Pumpun asento täytön aikana – MS 6000

3.1.3 Grundfos uppomoottorit tyyppi MMS 6000, MMS 8000, MMS 10000 ja MMS 12000

Täyttäminen:

1. Aseta moottori 45° kulmaan moottorin yläpuoli ylöspäin, katso kuva 4.
2. Kierrä tulppa A irti ja aseta suppilo reikään.
3. Kaada vesijohtovettä moottoriin, kunnes moottorin sisällä oleva neste alkaa virrata ulos kohdasta A.
   Huom. Älä käytä moottorista tulevaa nestettä, sillä se sisältää öljyä.
4. Ota suppilo pois ja kiinnitä tulppa A.

Huom. Ennen kuin kiinnität moottorin pumppuun pidemmän varastoinnin jälkeen, voitele akselitiiviste lisäämällä muutama pisara vettä ja kiertämällä akselia.

FIN

Uppopumppu on nyt asennusvalmis.

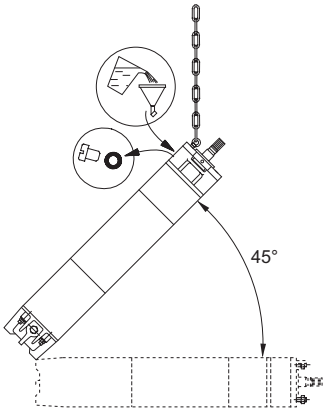

TM03 2065 3605

Kuva 4 Pumpun asento täytön aikana – MMS

3.1.4 Franklin uppomoottorit 3 kW ja yli

Franklin 4" ja 6" uppomoottoreiden nestepinta tarkistetaan mittaamalla. Moottorin pohjassa sijaitsevan reiän kautta mitataan välimatka moottorissa sijaitsevaan kalvoon mittatikulla tai vast., kuva 5.
Huom. Kumikalvoa ei saa vahingoittaa.

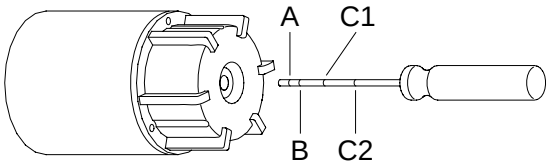

TM00 1353 5092

Kuva 5 Etäisyyden mittaaminen pohjalevystä kalvoon

Seuraava taulukko ilmoittaa oikean mitan moottorin ulkopinnasta kalvoon:

Moottori	Mitta	Välimatka
Franklin 4", 0,25 ... 3 kW (katso kuva 6a)	A	8 mm
Franklin 4", 3 ... 7,5 kW (katso kuva 6b)	B	16 mm
Franklin 6", 4 ... 45 kW (katso kuva 6c)	C1	35 mm
Franklin 6", 4 ... 22 kW (katso kuva 6d)	C2	59 mm

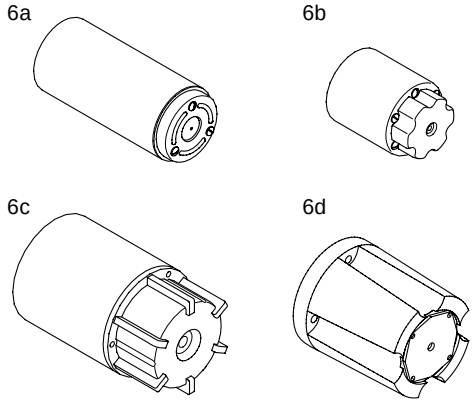

TM00 6422 3695

Kuva 6 Franklin uppomoottorit

Jos mitta ei ole oikea, suoritetaan säätö: kohta *3.1.5 Franklin uppomoottorit* mukaisesti.

3.1.5 Franklin uppomoottorit

Seuraavaa menettelytapaa käytetään Franklin 8" uppomoottoreiden moottorinesteen tarkistuksessa ja täytössä:

1. Siirrä moottorin yläosassa venttiilin edessä sijaitseva suodatin ylös ruuvitaltan avulla. Jos suodattimessa on lovi, ruuvi irroitetaan. Täyttöventtiilin sijoitus ilmenee kuvasta 7.
2. Paina täyttöruisku venttiiliä vastaan ja pumppaa nestettä sisään moottoriin, kuva 7. Jos venttiilikartiota painetaan liian syvälle, se voi vahingoittua ja venttiili jää epätiiviiksi.
3. Poista mahdollinen moottorissa sijaitseva ilma painamalla täyttöruiskun kärki kevyesti venttiiliin.
4. Jälkikäytä nestettä ilmanpoiston jälkeen, kunnes nestettä palautuu täyttöruiskuun tai kun oikea kalvoasento saavutetaan (Franklin 4" ja 6").
5. Asenna suodatin kohdalleen täytön jälkeen.

Uppopumppu on nyt asennusvalmis.

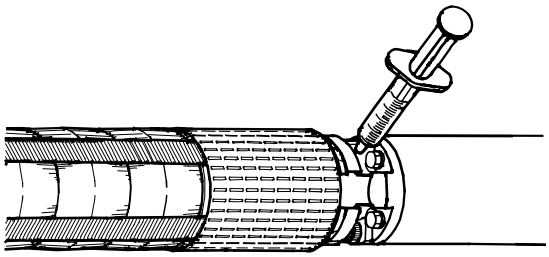

TM00 1354 5092

Kuva 7 Täyttöventtiilin asento

3.1.6 Mercury uppomoottorit

Moottorinesteen tarkistus suoritetaan kuten Franklin 8" moottoreille, katso jakso *3.1.5 Franklin uppomoottorit*.

3.1.7 Pleuger uppomoottorit

Moottorinesteen tarkistus suoritetaan kuten Franklin 8" moottoreille, katso jakso *3.1.5 Franklin uppomoottorit*.

3.2 Tilantarve

Jos pumppu asennetaan niin, että se olisi kosketeltavissa, on kytkinosa suojattava, esim. asentamalla pumppu jäähdytysvaippaan.

Moottorityypistä riippuen pumppu voidaan asentaa pysty- tai vaakasuoraan. Täydellinenn luettelo moottorityypeistä, jotka soveltuvat vaakasuoraan asennukseen on esitetty jaksossa *3.2.1*.

Jos pumppu asennetaan vaakasuoraan, ei pumpun paineyhde saa sijoittua vaakatason alapuolelle. Katso kuva 8.

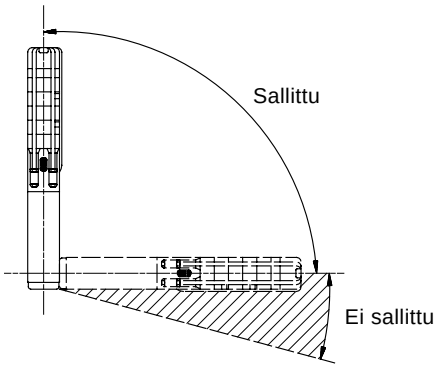

TM00 1355 5092

Kuva 8 Tilantarve

Kun pumppu asennetaan vaakasuoraan asentoon säiliöön tai vastaavaan, suositellaan pumpulle asennettavaksi jäähdytysvaippa.

FIN

3.2.1 Moottorit vaakasuoraan asennukseen

Moottorityyppi	Teholuokka 50 Hz	Teholuokka 60 Hz
	[kW]	[kW]
MS	Kaikki koot	Kaikki koot
MMS 6000	3,7 ... 18,5	3,7 ... 18,5
MMS 8000	22,0 ... 63,0	22,0 ... 63,0
MMS 10000	75,0 ... 110,0	75,0 ... 110,0
MMS 12000	147,0 ... 190,0	–

Kun 4" Franklin uppomoottoreita, 2,2 kW asti, käynnistetään useammin kuin 10 kertaa vuorokaudessa, suositellaan moottori asennettavaksi vähintään 15° yli vaakatason tukilaakerin kulumisen vähentämiseksi.

Huom. Käytön aikana on pumpun imuaukon aina oltava nestepinnan alapuolella.

Kun pumppua käytetään kuumien nesteitten pumppaamiseen (40°C ... 60°C) on pumppu ja putkisto suojattava kosketuksilta.

3.3 Pumppu-/moottorihalkaisija

Maks. pumppu-/moottorihalkaisijat ilmenevät taulukosta sivu 146 ja 147.

Porareikä suositellaan tarkastettavaksi tulkilla vapaan upotuksen varmistamiseksi.

3.4 Nestelämpötila/jäähdytys

Pumpattavan nesteen maks. lämpötilat ja min. virtausnopeudet moottorin jäähdyttämiseksi ilmenevät jäljempänä esitetystä taulukosta.

Pumppu suositellaan asennettavaksi siivilän yläpuolelle parhaimman jäähdytyksen saavuttamiseksi.

Huom. Niissä tilanteissa, joissa ilmoitettua virtausnopeutta ei pystytä saavuttamaan, on käytettävä jäähdytysvaippaa.

Jos liete, hiekka tai vast. on uhkana kerääntyä moottorin ympärille, on myös käytettävä jäähdytysvaippaa moottorin jäähdytystä silmälläpitäen.

3.4.1 Maks. nestelämpötila

Pumpun ja moottorin kumiosien takia ei nestelämpötila saa ylittää 40°C (~105°F). Katso myös taulukkoa jäljempänä.

Käyttö 40°C ja 60°C (~105°F ja 140°F) välisillä nestelämpötiloilla on mahdollista, mutta edellyttää kaikkien kumiosien vaihtamista kolmen vuoden välein.

Moottori	Asennustapa		
	Virtaus moottorin ohi	Pysty-suora	Vaaka-suora
Grundfos MS ja MMS	**Vapaa säteily 0 m/s**	20°C (~68°F)	Jäähdytys-vaippa suosit
Grundfos MS	**0,15 m/s**	40°C (~105°F)	40°C (~105°F)
Grundfos MS I *	**0,15 m/s**	60°C (~140°F) Jäähdytys-vaippa suosit	60°C (~140°F) Jäähdytys-vaippa suosit
Grundfos MMS	**0,15 m/s**	25°C (~77°F)	25°C (~77°F)
Franklin 4"	**0,08 m/s**	30°C (~85°F)	30°C (~85°F)
Franklin 6" ja 8"	**0,16 m/s**	30°C (~85°F)	30°C (~85°F)
Mercury	**0,15 m/s**	25°C (~77°F)	25°C (~77°F)
Pleuger	**0,5 m/s**	30°C (~86°F)	30°C (~86°F)

* Ympäristön paineen ollessa vähintään 1 bar (1 MPa)

Huom. Vapaalla säteilyllä tarkoitetaan, että porareiän halkaisija on vähintään 2" suurempi kuin uppomoottorin halkaisija.

Muut moottorivalmistajat: Katso k.o. moottorin erittelystä.

3.5 Putkiyhde

Resonanssiäänen välttämiseksi suositellaan käytettäväksi muoviputkia.

Huom. Muoviputkia suositellaan käytettäväksi vain 4" pumpuissa.

Kun käytetään muoviputkia, on pumppu varmistettava jännitysvapaalla turvalangalla.

Käytettävien muoviputkien on kestettävä nestelämpötila sekä pumpun aikaansaama paine.

Pumpun ja muoviputken välillä käytetään puristusliitosta.

4. Sähköliitännät

Ennenkuin mihinkään toimenpiteisiin ryhdytään, on varmistettava, että syöttöjännite on katkaistu ja että sitä ei epähuomiossa voida kytkeä.

4.1 Yleistä

Sähköliitännät suorittaa valtuutettu sähköasentaja voimassa olevien säännösten mukaisesti.

Syöttöjännite, nimellisvirta ja cos φ ilmenevät toimitukseen sisältyvästä pumppukilvestä, **joka** on sijoitettava asennuspaikalle.

Uppomoottoreiden vaatima jännitelaatu mitattuna **MS** ja **MMS** moottorin liittimistä on –10%/+6% nimellisjännitteestä jatkuvassa käytössä (sisältäen syöttöjännitteen vaihtelut ja kaapelihäviöt).

Verkossa on myös oltava jännitesymmetria, t.s. sama jännite-ero eri vaiheitten välillä. Katso myös jakso *9. Moottori- ja kaapelitarkistus*, kohta 2.

FIN

Pumppu on maadoitettava.

Pumppuun on liitettävä ulkoinen syöttöjännitteen katkaisija, joissa kaikkien napojen kärkiväli on vähintään 3 mm.

Jos Grundfos MS -moottoria sisäisellä lämpötila-anturilla (Tempcon) ei asenneta yhdessä MP 204 tai vastaavan Grundfos-moottorinsuojan kanssa, ne on kytkettävä 0,47 µF kondensaattoriin, joka on hyväksytty vaiheiden väliseen käyttöön (IEC 384-14), jotta EY:n EMC-direktiivin (89/336/ETY) vaatimukset täyttyvät. Kondensaattori on kytkettävä niiden kahden vaiheen väliin, joihin lämpötila-anturi on kytketty, katso kuva 9.

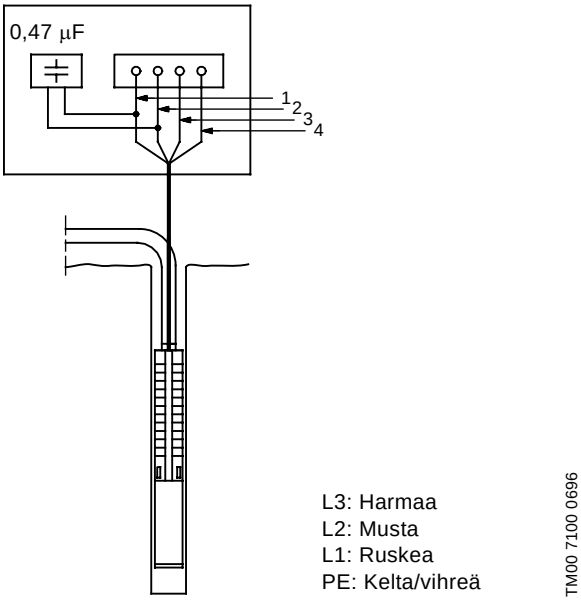

Kuva 9 Kondensaattorin kytkentä

Moottorit on käämitty suorakäynnistystä tai Y/Δ-käynnistystä varten, jolloin käynnistysvirta on 4-6 kertaa moottorin täyskuormavirta.

Pumpun käynnistymisaika on vain 0,1 sek. Sähkölaitokset hyväksyvät tämän takia yleensä suorakäynnistyksen.

4.1.1 Taajuusmuuttajakäyttö

Grundfos moottorit

3-vaiheiset Grundfos moottorit voidaan liittää taajuusmuuttajakäyttöön.

Huom. Jos lämpötila-anturilla varustettu Grundfos MS moottori liitetään taajuusmuuttajakäyttöön, tulee yksi sulake anturissa sulamaan, jolloin anturi ei enää toimi. Anturia ei voi aktivoida uudelleen, joten moottori tulee tämän jälkeen toimimaan kuten ilman lämpötila-anturia olevat moottorit.

Kun halutaan käyttää lämpötilalähetintä, voidaan uppomoottoriin asennettavaksi tarkoitettu Pt100 lähetin tilata Grundfos'ilta.

Taajuusmuuttajakäytössä ei ole suotavaa käyttää taajuutta, joka ylittää nimellistaajuuden (50 tai 60 Hz). Pumpun käytön yhteydessä on tärkeätä, että ei koskaan säädetä taajuutta (ja samalla pyörimisnopeutta) alemmaksi kuin, että moottorin ohi virtaa riittävästi nestettä takaamaan jäähdytys.

Pumppuosan vahingoittumisen välttämiseksi on varmistettava, että moottori pysähtyy, kun pumpun tuotto laskee alle 0,1 x nimellistuoton.

Taajuusmuuttajatyypistä riippuen tämä voi vaikuttaa, että moottori joutuu alttiiksi vahingollisille jännitepiikeille.

Moottorit tyyppi MS 402 jännitteille 440 V asti (katso moottorin tyyppikilvestä) on suojattava 650 V ylittäviltä jännitepiikeiltä (huippuarvo) syöttöjohtimen välillä.

Muut moottorit on suojattava 850 V ylittäviltä jännitepiikeiltä.

Edellä mainitut häiriöt voidaan poistaa asentamalla **RC-suodatin** taajuusmuuttajan ja sähkömoottorin väliin.

Mahdollinen lisääntynyt moottorin akustinen melu on vaimennettavissa asentamalla **LC-suodatin**, joka myös estää taajuusmuuttajan jännitepiikit.

Taajuusmuuttajan toimittaja tai Grundfos antaa tarvittaessa lisätietoja.

Muut moottorit kuin Grundfos

Ota yhteys Grundfos'iin tai sähkömoottorin valmistajaan.

4.2 Moottorisuoja

4.2.1 1-vaiheiset moottorit

1-vaihe uppomoottoreissa tyyppiä MS 402 on sisäänrakennettu lämpösuoja, eivätkä ne tämän takia tarvitse muuta moottorisuojaa.

Kun moottorin lämpösuoja on lauennut, on moottorin liittimillä kuitenkin jännite.
Kun moottori on jäähtynyt riittävästi, se käynnistyy automaattisesti uudelleen.

1-vaihe uppomoottoreihin tyyppiä MS 4000 on liitettävä moottorisuoja. Se voi sijaita kytkentärasiassa tai olla erillinen.

Franklin 4" PSC moottorit on varustettava moottorisuojalla.

4.2.2 3-vaihe moottorit

Grundfos **MS** moottorit voidaan toimittaa sisäänrakennetulla lämpötila-anturilla tai ilman tätä.

Moottorit sisäänrakennetulla ja toimivalla lämpötilalähettimellä on suojattava:

- lämpöreleellä varustetulla moottorisuojalla tai
- MTP 75:llä ja lämpöreleellä varustetulla moottorisuojalla tai
- MP 204:lla ja kontaktoreilla.

Moottorit **ilman** tai viallisella lämpötilalähettimellä on suojattava:

- lämpöreleellä varustetulla moottorisuojalla tai
- MP 204:lla ja kontaktoreilla.

Grundfos **MMS** moottoreissa ei ole lämpötila-anturia, mutta Pt100 anturi voidaan asentaa lisävarusteena.

Pt100 anturilla **varustettu** moottori on suojattava:

- lämpöreleellä varustetulla moottorisuojalla tai
- MP 204:lla ja kontaktoreilla.

Moottorit **ilman** Pt100 anturia on suojattava:

- lämpöreleellä varustetulla moottorisuojalla tai
- MP 204:lla ja kontaktoreilla.

4.2.3 Vaatimukset moottorisuojan säädölle

Moottorisuojan katkaisuaika kylmälle moottorille tulee olla alle 10 sek. 5-kertaisella leimatulla nimellisvirralla.

Huom. Jos tätä ehtoa ei noudateta, moottorin takuu purkautuu.

Uppomoottorin parhaan suojauksen varmistamiseksi on moottorisuoja säädettävä seuraavien ohjeiden mukaan:

1. Säädä moottorisuoja moottorin leimatulle nimellisvirralle.
2. Käynnistä pumppu puoleksi tunniksi tavanomaiseen käyttöön.
3. Käännä asteikon osoitinta hitaasti pienemmälle, kunnes moottorisuoja katkaisee.
4. Lisää moottorisuojan asetusta 5%.

Suurin sallittu asetus on moottorin leimattu nimellisvirta.

Y/Δ-käynnistystä varten liitetyille moottoreille menettelytapa on sama kuin edellä, mutta moottorisuojan asetus saa suurimmillaan olla:

Moottorisuoja = Leimattu nimellisvirta x 0,58.

Pisin sallittu käynnistysaika Y/Δ-käynnistyksellä tai automaattisella muuntajakäynnistyksellä on 2 sek.

FIN

4.3 Salamasuoja

Asennus voidaan varustaa erityisellä ylijännitesuojalla, joka suojaa moottoria syöttöverkon ylijännitteiltä, esim. alueella salamaniskuista aiheutuneista, katso kuva 10.

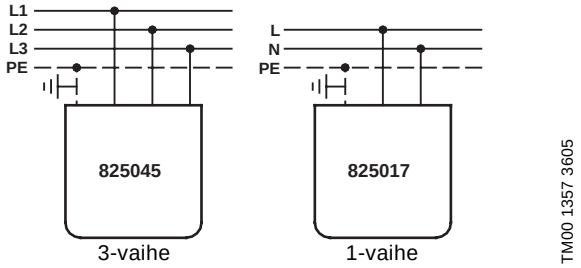

Kuva 10 Ylijännitesuojan asennus

Ylijännitesuoja ei kuitenkaan suojaa suoraan asennukseen kohdistuneilta salamaniskuilta.

Ylijännitesuoja liitetään asennukseen niin lähelle moottoria kuin mahdollista ja muuten voimassa olevien asennusta koskevien säännösten mukaisesti.
Grundfos toimittaa myös salamasuojia.

Uppomoottoreissa tyyppiä MS 402 on kuitenkin niin korkea eristystaso, että ne eivät vaadi erillistä salamasuojaa.

Grundfos 4" uppomoottoreihin voidaan toimittaa erikoiskaapeliliitin, jossa on sisäänrakennettu ylijännitesuoja (osa nr. 799911 / 799912).

4.4 Uppokaapelin valinta

Uppokaapelin on pystyttävä kestämään jatkuva upotus k.o. nesteessä ja lämpötilassa.

Grundfos pystyy toimittamaan uppokaapelit useimpiin asennuksiin.

Uppokaapelin poikkipinta-alaan (q) asetetaan seuraavat vaatimukset:

1. Uppokaapeli on mitoitettava moottorin leimatun nimellisvirran (I) mukaan.
2. Poikkipinta-ala on valittava riittävän suureksi, niin että kaapelin jännitehäviöt ovat hyväksyttäviä.

Suurin kohdan 1. ja 2. mukaan saatu poikkipinta-ala valitaan.

Lisäys kohtaan 1: Seuraava taulukko ilmoittaa Grundfos uppokaapeleiden virta-arvon (t.s. suurin virta, jonka kaapeli kestää), kun ympäristön lämpötila on maks. +30°C.
Ota yhteys Grundfos'iin, jos ympäristölämpötila ylittää +30°C.

Uppokaapeli valitaan niin, että moottorin leimattu nimellisvirta ei ylitä virta-arvoa (I_S).

Y/Δ-käynnistyksessä kaapelit valitaan kuitenkin niin, että 0,58 x moottorin leimattu nimellisvirta ei ylitä kaapeleiden virta-arvoa (I_S).

q [mm^2]	I_S [A]	q [mm^2]	I_S [A]
1,5	18,5	50	153
2,5	25	70	196
4	34	95	238
6	43	120	276
10	60	150	319
16	80	185	364
25	101	240	430
35	126	300	497

Jos asennuksessa ei käytetä Grundfos uppokaapeleita, on poikkipinta-ala määriteltävä k.o. kaapeleiden virta-arvon perusteella.

Lisäys kohtaan 2:
Huom. Uppokaapelit on valittava niin suurella poikkipinta-alalla, että moottoreiden jännitelaadun vaatimukset jakso *4.1 Yleistä* mukaisesti täyttyvät.

Uppokaapeleiden poikkipinta-alan mitoitus suoritetaan jännitehäviön perusteella sivujen 148 ja 149 kaavioiden mukaan, jossa

I = Moottorin leimattu nimellisvirta.
Y/Δ-käynnistyksellä
I = moottorin leimattu nimellisvirta x 0,58.

Lx = Kaapelin pituus muutettuna 1% jännitehäviöksi nimellisjännitteestä.

$$Lx = \frac{\text{uppokaapelin pituus}}{\text{sallittu jännitehäviö \%}}$$

q = Uppokaapelin poikkipinta-ala.

K.o. I-arvon ja Lx-arvon väliin vedetään suora. q-akselin leikkauskohdasta valitaan se poikkipinta-ala, joka on lähinnä suurempi.

Kaaviot on laadittu seuraavien kaavojen mukaan:

1-vaihe uppomoottorit

$$L = \frac{U \times \Delta U}{I \times 2 \times 100 \times \left(\cos\varphi \times \frac{\rho}{q} + \sin\varphi \times XI\right)}$$

3-vaihe uppomoottorit

$$L = \frac{U \times \Delta U}{I \times 1{,}73 \times 100 \times \left(\cos\varphi \times \frac{\rho}{q} + \sin\varphi \times XI\right)}$$

joissa

L = Uppokaapelin pituus [m]
U = Nimellisjännite [V]
ΔU = Jännitehäviö [%]
I = Moottorin leimattu nimellisvirta [A]
cos φ = 0,9
ρ = Ominaisvastus: 0,02 [Ωmm^2/m]
q = Uppokaapelin poikkipinta-ala [mm^2]
sin φ = 0,436
XI = Induktiivinen vastus: 0,078 x 10^{-3} [Ω/m]

4.5 1-vaihe MS 402 ohjaus

1-vaihe MS 402 moottoreissa on sisäänrakennettu moottorisuoja, joka pysäyttää moottorin liian korkeassa käämilämpötilassa, mutta jännite moottorilla on jatkuvasti kytkettynä. Tämä on huomioitava, kun moottori sisältyy ohjausjärjestelmään.

Kun esim. kompressori yhdessä okkerisuodattimen kanssa sisältyvät ohjausjärjestelmään, tulee kompressori jatkuvasti käymään, kun moottorisuoja on pysäyttänyt moottorin, mikäli ei erikoisiin varotoimiin ole ryhdytty.

4.6 1-vaihe moottoreiden liitäntä

4.6.1 2-johdin moottorit

Grundfos MS 402 2-johdin moottoreissa on sisäänrakennettu moottorisuoja ja käynnistin, ja ne voidaan näin ollen liittää suoraan verkkoon, katso kuva 11.

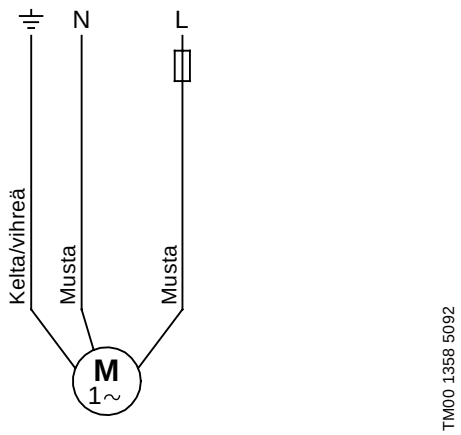

Kuva 11 2-johdin moottorit

FIN

4.6.2 PSC moottorit

PSC moottorit liitetään verkkoon käyttökondensaattorin kautta, joka tulee mitoittaa jatkuvaa käyttöä varten.

Oikea kondensaattori valitaan seuraavan taulukon mukaan:

Moottori	Kondensaattori
0,25 kW	12,5 µF / 400 V / 50 Hz
0,37 kW	16 µF / 400 V / 50 Hz
0,55 kW	20 µF / 400 V / 50 Hz
0,75 kW	30 µF / 400 V / 50 Hz
1,10 kW	40 µF / 400 V / 50 Hz
1,50 kW	50 µF / 400 V / 50 Hz
2,20 kW	75 µF / 400 V / 50 Hz

Grundfos MS 402 PSC moottoreissa on sisäänrakennettu moottorisuoja ja ne liitetään verkkoon kuvan 12 mukaan.

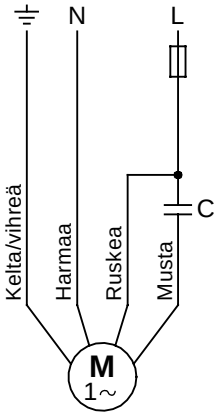

TM00 1359 5092

Kuva 12 PSC moottorit

Katso www.franklin-electric.com ja kuva 13.

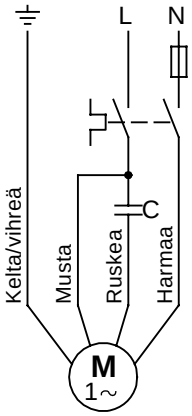

TM00 1361 1200

Kuva 13 Franklin uppomoottorit

4.6.3 3-johdin moottorit

Grundfos MS 4000 3-johdin moottorit liitetään verkkoon Grundfos SA-SPM 2 tai 3 kytkentärasian kautta, jossa on sisäänrakennettu moottorisuoja.

Grundfos MS 402 3-johdin moottoreissa on sisäänrakennettu moottorisuoja ja liitetään verkkoon Grundfos SA-SPM 2 tai 3 kytkentärasian kautta, joka on ilman moottorisuojaa.

Sekä MS 4000 että MS 402 liittäminen ilmenee seuraavasta taulukosta:

Moottori	Kaapeli	Kytk.rasia	Verkko
0,75 kW asti	Harmaa Ruskea Musta Kelta/vihreä	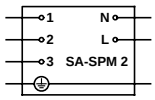	N L PE
1,10 kW lähtien	Harmaa Ruskea Musta Kelta/vihreä	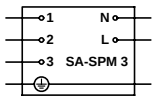	N L PE

4.7 3-vaihe moottoreiden liitäntä

3-vaihe uppomoottorit on suojattava, katso jakso *4.2.2 3-vaihe moottorit*.

MP 204 käytössä viitataan sähköliitäntöjen osalta valvontayksikön omiin asennus- ja käyttöohjeisiin.

Perinteellisen moottorisuojan käytössä on sähköliitäntä suoritettava jäljempänä selostetun mukaisesti.

4.7.1 Pyörimissuunnan tarkistus

Huom. Pumpun saa käynnistää vain silloin kun imuaukko on kokonaan upotettuna nesteeseen.

Kun pumppu on liitetty verkkoon, todetaan oikea pyörimissuunta seuraavalla tavalla:

1. Pumppu käynnistetään ja vesimäärä sekä paine mitataan.
2. Pumppu pysäytetään ja syöttöverkon kaksi vaihetta vaihdetaan keskenään.
   Y/Δ-käynnisteisissä moottoreissa vaihdetaan U1 ja V1 sekä U2 ja V2.
3. Pumppu käynnistetään ja vesimäärä sekä paine mitataan.
4. Pumppu pysäytetään.
5. Kohtien 1. ja 3. tuloksia verrataan. Suurin vesimäärä ja paine ilmoittavat oikean pyörimissuunnan.

4.7.2 Grundfos moottorit, suorakäynnistys

Grundfos uppomoottoreiden liitäntä suorakäynnistyskäämityksellä ilmenee seuraavasta taulukosta ja kuvasta 14.

Verkko	Kaapeli/liitäntä
	Grundfos 4" ja 6" moottorit
PE	PE (kelta/vihreä)
L1	U (ruskea)
L2	V (musta)
L3	W (harmaa)

Pyörimissuunnan tarkistus suoritetaan jakson *4.7.1 Pyörimissuunnan tarkistus* mukaisesti.

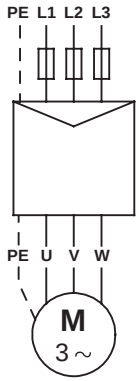

TM03 2099 3705

Kuva 14 Grundfos moottorit, suorakäynnistys

FIN

4.7.3 Grundfos moottorit, Y/Δ-käynnistys

Grundfos uppomoottoreiden liitäntä Y/Δ-käynnistys käämityksellä ilmenee seuraavasta taulukosta ja kuvasta 15.

Liitäntä	Grundfos 6" moottorit
PE	Kelta/vihreä
U1	Ruskea
V1	Musta
W1	Harmaa
W2	Ruskea
U2	Musta
V2	Harmaa

Pyörimissuunnan tarkistus suoritetaan jakson *4.7.1 Pyörimissuunnan tarkistus* mukaisesti.

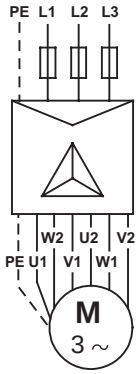

TM03 2100 3705

Kuva 15 Grundfos moottorit, Y/Δ-käynnistys

Kun Y/Δ-käynnistyksen sijasta käytetään suorakäynnistystä, uppomoottorit liitetään kuva 16 mukaan.

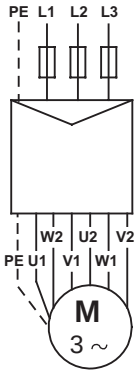

TM03 2101 3705

Kuva 16 Grundfos moottorit, suorakäynnistys

FIN

4.7.4 Kytkentä tuntemattomin kaapelimerkinnöin

Kun ei tiedetä, mihin yksittäiset johtimet on liitettävä verkossa, on oikean pyörimissuunnan turvaamiseksi meneteltävä seuraavasti:

Moottorit, suorakäynnistyskäämityksellä

Pumppu liitetään syöttöverkkoon oikeaksi katsotulla tavalla.

Pyörimissuunnan tarkistus suoritetaan jakson *4.7.1 Pyörimissuunnan tarkistus* mukaisesti.

Moottorit Y/Δ-käynnistyskäämityksellä

Moottorin käämit tunnistetaan vastusmittarin avulla ja yksittäisten käämien johdinparit nimetään vuorollaan U1-U2, V1- V2 ja W1-W2, katso kuva 17.

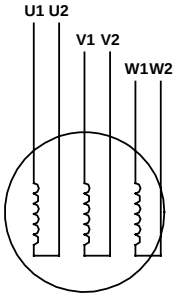

TM00 1367 5092

Kuva 17 Tunnistamaton kaapelin merkintä/liitäntä – moottorit Y/Δ-käynnistyskäämityksellä

Kun kytketään Y/Δ-käynnistystä varten, liitetään johtimet kuvan 15 mukaan.

Kun kytketään suorakäynnistysä varten, liitetään johtimet kuvan 16 mukaan.

Pyörimissuunnan tarkistus suoritetaan jakson *4.7.1 Pyörimissuunnan tarkistus* mukaisesti.

4.7.5 Franklin, Mercury ja Pleuger moootorit

Franklin, Mercury ja Pleuger uppomoottoreiden kytkeminen ilmenee jaksosta *4.7.4 Kytkentä tuntemattomin kaapelimerkinnöin*.

5. Pumppuasennus

Ennenkuin mihinkään toimenpiteisiin ryhdytään, on varmistettava, että syöttöjännite on katkaistu ja että sitä ei epähuomiossa voida kytkeä.

5.1 Moottorin asennus pumppuun

Jos pumppuosa ja moottori on toimitettu eri yksikköinä (pitkät pumput), asenna moottori pumppuun seuraavasti:

1. Käytä putkenpitimiä käsitellessäsi moottoria.
2. Aseta moottori pystyasentoon porakaivotiivisteen päälle, katso kuva 18.

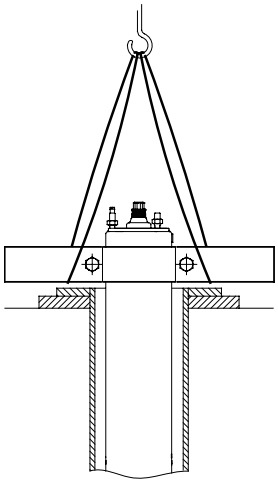

TM00 5259 2402

Kuva 18 Moottori pystyasennossa

3. Nosta pumppuosa jatkoputkeen kiinnitetyistä putkenpitimistä, katso kuva 19.

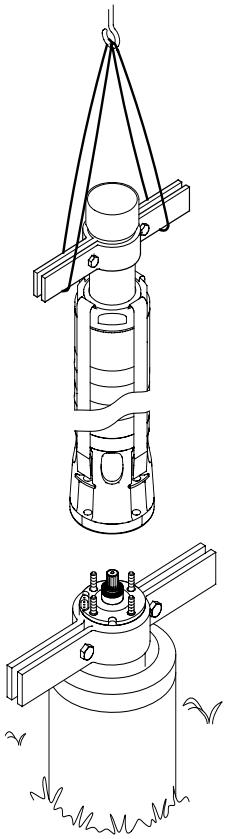

Kuva 19 Pumpun nostaminen paikoilleen

4. Sijoita pumppuosa moottorin päälle.
5. Asenna ja kiristä mutterit, katso alla olevasta taulukosta kiristysmomentteja.

Pumpun kiristyskiskojen kiinnityksien pultit ja mutterit kiristetään ristikkäin alla olevan taulukon mukaisiin momentteihin:

Kiristyskisko pultti/mutteri	Momentti [Nm]
M8	18
M10	35
M12	45
M16	120
SP 215, 50 Hz, yli 8 jaksoa SP 215, 60 Hz, yli 5 jaksoa	150

Huom. Varmista huolella, että pumpun ja moottorin välisen kytkimen sovitus on kohdallaan.

Moottorin ja pumpun yhdistämisessä mutterit kiristetään ristikkäin alla olevan taulukon mukaisiin momentteihin:

Pumppu/moottori sidepulttihalk.	Momentti [Nm]
M8	18
M12	70
M16	150
M20	280

Huom. Varmista, että pumppu on suorassa asennuksen jälkeen.

5.2 Kaapelisuojan purkaminen/asennus

Ennen kaapelisuojan purkamista ja asennusta katso sivu 150 ja 151.

Kun kaapelisuoja on ruuvattu pumppuun, esim. SP 215 pumpussa ja putkipumpuissa, puretaan/asennetaan kaapelisuoja ruuvien avulla.

Huom. Varmista, että pumppu on suorassa asennuksen jälkeen.

5.3 Uppokaapelin asennus

5.3.1 Grundfos uppomoottorit

Ennen uppokaapelin asennusta moottoriin, on varmistettava, että kaapelipistoke on puhdas ja kuiva.

Asennuksen helpottamiseksi kaapelipistokkeen kumiosat voidellaan sähköä johtamattomalla silikonipastalla.

Kaapelin kiristysruuvit kiristetään seuraaviin momentteihin:

MS 402: 2,0 Nm.
MS 4000: 2,0 Nm.
MS 6000: 4,0-5,0 Nm.
MMS 6000: 10 Nm.
MMS 12000: 15 Nm.

5.4 Nousuputken asennus

Jos nousuputken asennuksessa käytetään työkaluja pumpun kiinni pitämiseen, esim. putki- tai ketjupihtejä, saa näitä käyttää vain pumpun yläkappaleen kohdalla.

Nousuputken kierreliitoksissa on oltava virheettömät kierteet, jotka kiinnikierrettyinä varmistavat, että liitokset eivät löysty pumpun käynnistyksen ja pysäytyksen aiheuttamista vääntömomenteista.

Pumpun puoleiseen päähän tuleva kierre ei saa olla pitempi kuin pumpussa oleva kierre.

Huom. Jos resonanssimelu aiheuttaa pulmia, suositellaan käytettäväksi muoviputkia, kuitenkin vain 4" pumpuissa.

Kun käytetään muoviputkia, on pumppu varmistettava turvalangalla, joka kiinnitetään pumpun yläkappaleeseen, katso kuva 20.

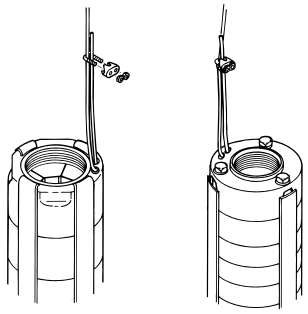

Kuva 20 Kiristysvaijerin kiinnitys

Pumpun liittämiseksi muoviputkeen tulee käyttää puristusliitosta.

Kun käytetään laippaputkia, tulee laipoissa olla hahlo uppokaapelia ja mahd. peilausletkua varten.

5.5 Suurin asennussyvyys vedenpinnan alapuolella

Grundfos MS 402: 150 m.
Grundfos MS 4000: 600 m.
Grundfos MS 6000: 600 m.
Grundfos MMS: 250 m.
Franklin moottorit: 350 m.
Mercury moottorit: 350 m.
Pleuger moottorit: 350 m.

FIN

5.6 Kaapelisiteet

Käytä kaapelisiteitä 3 m välein uppokaapelin ja mahd. turvalangan sitomiseksi nousuputkeen.

Grundfos pystyy toimittamaan kaapelisiteitä. Sarja koostuu 1,5 mm paksusta kuminauhasta ja 16 kpl:sta lukkoja.

Asennus: Leikkaa kuminauha poikki niin, että hahloton osa tulee mahdollisimman pitkäksi.
Aseta lukko ensimmäiseen hahloon.
Sijoita turvalanka uppokaapelin viereen, kuva 21.

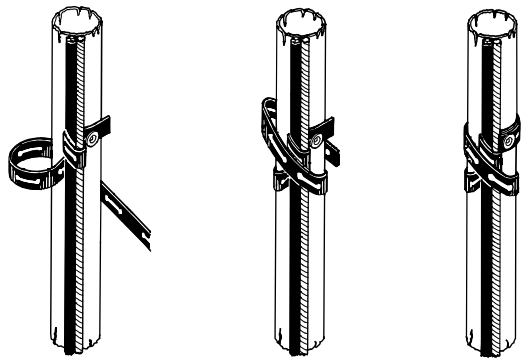

Kuva 21 Kaapelinkiinnikkeiden kiinnitys

Kierrä kuminauha kerran turvalangan ja uppokaapelin ympäri.
Kierrä tämän jälkeen kuminauha kireästi vähintään kaksi kertaa putken, turvalangan ja uppokaapelin ympäri.
Paina hahlo lukkoon ja leikkaa kuminauha poikki.

Käytettäessä paksumpia kaapeleita on kuminauha kierrettävä useamman kerran ympäri.

Kun käytetään muoviputkea, on uppokaapeliin jätettävä löysää jokaisen kaapelisiteen väliin kuormitetun muoviputken venymisen johdosta.

Laippaputkia käytettäessä kiristetään kaapeliside lisäksi ennen ja jälkeen jokaisen laippaliitoksen.

5.7 Pumpun upotus

Ennen pumpun upotusta suositellaan porareikä tarkistettavaksi tulkin avulla vapaan asennuksen varmistamiseksi

Pumppu upotetaan varovasti porareikään moottorikaapelia ja uppokaapelia vahingoittamatta.

Huom. Pumppua ei saa nostaa moottorikaapelista.

5.8 Asennussyvyys

Dynaamisen vedenpinnan on aina oltava pumpun imuaukon yläpuolella, katso jakso *3.2 Tilantarve* ja kuva 22.

Min. tulopaineen ilmoittaa pumpun NPSH käyrä.
Min. varmuuslisän on oltava 1,0 mvp.

Parhaan jäähdytyksen aikaansaamiseksi pumppu suositellaan asennettavaksi niin, että moottoriosa on poraussuodattimen yläpuolella, katso jakso *3.4 Nestelämpötila/jäähdytys*.

Porakaivon päälle asennetaan kaulusputki ja suojahattu, kun pumppu on laskettu haluttuun upotussyvyyteen.

Turvalankaa löysätään niin, että se on kuormittamaton ja se kiinnitetään kaulusputkeen vaijerilukon avulla.

Huom. Muoviputkella asennettujen pumppujen upotussyvyydessä on huomioitava muoviputken venyminen kuormituksen aikana.

6. Käyttöönotto ja käyttö

6.1 Käyttöönotto

Kun pumppu on oikein liitetty ja upotettu, se käynnistetään sulkuventtiili avattuna n. 1/3 täydestä tuotosta.

Pyörimissuunnan tarkistus suoritetaan jakson *4.7.1 Pyörimissuunnan tarkistus* mukaisesti.

Jos vedessä esiintyy epäpuhtauksia, avataan venttiiliä asteittain veden kirkastuessa. Pumppua ei saa pysäyttää, ennenkuin vesi on täysin puhdasta, koska muutoin pumppuosa ja takaiskuventtiili voivat tukkeutua.

Samanaikaisesti venttiiliä toivottuun tuottoon aukaistaessa tarkistetaan veden pinnan laskeminen kuivakäynnin välttämiseksi.

Dynaamisen vedenpinnan on aina oltava pumpun imuaukon yläpuolella, jakson *3.2 Tilantarve* ja kuvan 22 mukaisesti.

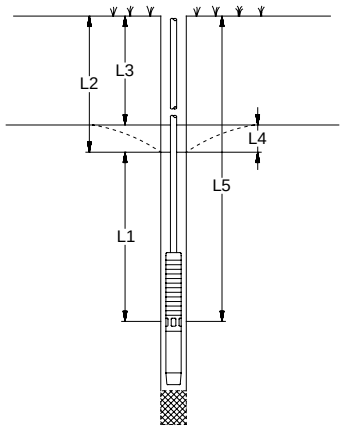

Kuva 22 Eri pinnankorkeuksien vertailu

L1: Pienin upotussyvyys dynaamisen vedenpinnan alla. Suositus on väh. 1 metri.

L2: Syvyys dynaamiseen vedenpintaan.

L3: Syvyys staattiseen vedenpintaan.

L4: Pinnan laskeminen. Tämä on dynaamisen ja staattisen vedenpinnan ero.

L5: Asennussyvyys.

Jos pumppu kykenee pumppaamaan enemmän vettä kuin porakaivo pystyy tuottamaan, suositellaan käytettäväksi Grundfos MP 204 valvontayksikkä tai muuta kuivakäyntisuojaa.

Ilman kuivakäyntisuojaa on olemassa vaara, että veden pinta laskee pumpun imuaukon tasolle, jolloin pumppu imee ilmaa.

Huom. Pitempiaikainen ilmasekoitteisen veden pumppaus voi vahingoittaa pumppua ja alentaa moottorin jäähdytystä.

FIN

6.2 Käyttö

6.2.1 Min. tilavuusvirta

Moottorin jäähdytystä silmälläpitäen ei pumpun tuottoa saa säätää pienemmäksi kuin että kohdan *3.4 Nestelämpötila/jäähdytys* jäähdytysvaatimukset täyttyvät.

6.2.2 Käynnistys-/pysäytystiheys

Moottori	Käynnistysmäärä
MS 402	Suositus väh. 1 krt vuodessa. Maks. 100 krt/tunti. Maks. 300 krt/vrk.
MS 4000	Suositus väh. 1 krt vuodessa. Maks. 100 krt/tunti. Maks. 300 krt/vrk.
MS 6000	Suositus väh. 1 krt vuodessa. Maks. 30 krt/tunti. Maks. 300 krt/vrk.
MMS 6000	Suositus väh. 1 krt vuodessa. Maks. 15 krt/tunti. Maks. 360 krt/vrk.
MMS 8000	Suositus väh. 1 krt vuodessa. Maks. 10 krt/tunti. Maks. 240 krt/vrk.
MMS 10000	Suositus väh. 1 krt vuodessa. Maks. 8 krt/tunti. Maks. 190 krt/vrk.
MMS 12000	Suositus väh. 1 krt vuodessa. Maks. 5 krt/tunti. Maks. 120 krt/vrk.
Franklin	Suositus väh. 1 krt vuodessa. Maks. 100 krt/vrk.
Mercury 6"	Suositus väh. 1 krt vuodessa. Maks. 20 krt/tunti.
Mercury 8"	Suositus väh. 1 krt vuodessa. Maks. 15 krt/tunti.
Mercury 10"	Suositus väh. 1 krt vuodessa. Maks. 10 krt/tunti.
Mercury 12"	Suositus väh. 1 krt vuodessa. Maks. 6 krt/tunti.
Pleuger	Suositus väh. 1 krt vuodessa. Maks. 100 krt/vrk.

7. Kunnossapito ja huolto

Pumput ovat huoltovapaita.

Kaikki pumput ovat helppoja huoltaa.

Grundfos toimittaa huoltosarjoja ja huoltotyökaluja pumppuihin.

Pumput voidaan huoltaa Grundfos huoltopisteessä.

Jos pumppua on käytetty nesteellä, joka on haitallinen terveydelle tai myrkyllinen, pumppu luokitellaan vaaralliseksi.

Kun tämänlaatuinen pumppu halutaan huoltaa Grundfos huollossa, on huoltokorjaamoon otettava yhteys ja ilmoitettava pumpatut nesteet, niiden vaarallisuus y.m. tiedot ennenkuin pumppu lähetetään huollettavaksi.

Muussa tapauksessa Grundfos voi kieltäytyä vastaanottamasta ja huoltamasta pumppua.

FIN

8. Vianetsintäkaavio

Vika	Syy	Toimenpide
1. Pumppu ei käy.	a) Sulakkeet ovat palaneet.	Vaihda sulakkeet. Jos uudetkin sulakkeet palavat, on sähköasennus ja uppokaapeli tarkastettava.
	b) Releet, katkaisija tai ylijännitesuoja lauenneet.	Kytke releet tai katkaisija.
	c) Verkkojännitehäiriö.	Ota yhteys sähkölaitokseen.
	d) Moottorisuoja lauennut.	Kytke moottorisuoja (tapahtuu automaattisesti tai käsikäyttöisesti). Jos moottorisuoja laukeaa uudelleen, on jännite tarkastettava. Jos jännite on oikein, katso kohdat e) - h).
	e) Moottorisuoja/kontaktori on viallinen.	Vaihda moottorisuoja/kontaktori.
	f) Käynnistin on viallinen.	Korjaa/vaihda käynnistin.
	g) Ohjausvirtapiiri on poikki tai viallinen.	Tarkista sähköasennus.
	h) Kuivakäyntisuoja on katkaissut jännitteen pumpulta liian alhaisen vedenpinnan johdosta.	Tarkista pinnankorkeus. Jos tämä on kunnossa, tulee kuivakäyntisuoja tarkastaa.
	i) Pumppu/uppokaapeli on viallinen.	Korjaa/vaihda pumppu/kaapeli.
2. Pumppu käy, mutta ei tuota vettä.	a) Sulkuventtiili on kiinni.	Aukaise venttiili.
	b) Kaivossa ei ole yhtään tai liian vähän vettä.	Katso kohta 3 a).
	c) Takaiskuventtiili on juuttunut suljettuun asentoon.	Nosta pumppu ylös ja puhdista tai vaihda venttiili.
	d) Imuaukko on tukkeutunut.	Nosta pumppu ylös ja puhdista imuaukko.
	e) Pumppu on viallinen.	Korjaa/vaihda pumppu.
3. Pumppu käy alennetulla tuotolla.	a) Veden pinta kaivossa on laskenut liian alas.	Lisää pumpun upotussyvyyttä, pienennä pumpun tuottoa tai vaihda pumppu pienempituottoiseen.
	b) Pyörimissuunta on väärä.	Katso jakso *4.7.1 Pyörimissuunnan tarkistus*.
	c) Paineputken venttiilit ovat osittain suljetut/tukkeutuneet.	Tarkasta venttiilit ja puhdista/vaihda ne.
	d) Paineputki on osittain tukkeutunut epäpuhtauksista.	Puhdista/vaihda paineputki.
	e) Pumpun takaiskuventtiili on osittain tukkeutunut.	Nosta pumppu ylös ja puhdista/vaihda venttiili.
	f) Pumppu ja nousuputki ovat osittain epäpuhtauksien tukkimia.	Nosta pumppu ylös. Tarkasta ja puhdista tai mahd. vaihda pumppu. Puhdista putket.
	g) Pumppu on viallinen.	Korjaa/vaihda pumppu.
	h) Putkistossa on vuoto.	Tarkasta ja korjaa putkisto.
	i) Nousuputki on viallinen.	Vaihda nousuputki.
4. Liian useasti toistuva käynnistys ja pysäytys.	a) Painekatkaisijan paine-ero käynnistys ja pysäytyspaineen välillä on liian pieni.	Suurenna paine-eroa. Pysäytyspainetta ei kuitenkaan saa nostaa yli säiliön käyttöpaineen ja käynnistyspaineen tulee olla riittävän korkea tyydyttävän veden saannin takaamiseksi.
	b) Automaattinen pinnanvalvonta tai säiliön pintakatkaisijat eivät ole oikein asennetut.	Säädä anturit/pintakatkaisimet sellaiselle etäisyydelle toisistaan, että pumpun käyttöjaksot saadaan sopiviksi. Katso asennetun automatiikan asennus- ja käyttöohjeita. Kun käyntijaksoa ei voida muuttaa automatiikkaa säätämällä, voidaan pumpun tuottoa mahd. muk. alentaa sulkuventtiilin avulla.
	c) Takaiskuventtiili vuotaa tai on juuttunut puoliavoimeen asentoon.	Nosta pumppu ylös ja puhdista tai vaihda takaiskuventtiili.
	d) Painesäiliön/kalvopainesäiliön ilmatila on liian pieni.	Säädä painesäiliön/kalvopainesäiliön ilmatila laitteen asennus- ja käyttöohjeen mukaan.
	e) Painesäiliö/kalvopainesäiliö on liian pieni.	Lisää säiliötilavuutta vaihtamalla säiliö tai täydentämällä toisella säiliöllä.
	f) Kalvopainesäiliön kalvo on viallinen.	Tarkasta kalvopainesäiliön kalvo.

FIN

9. Moottori- ja kaapelitarkistus

1. Verkkojännite 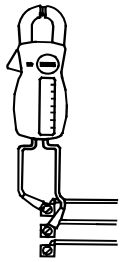 TM00 1371 5092	Mittaa volttimittarilla vaiheiden välinen jännite. 1-vaihe moottoreissa mitataan vaiheen ja nollan tai vaiheiden välinen jännite verkkotyypistä riippuen. Volttimittari kytketään liitinsiltaan.	Kuormitusjännitteen tulee asettua kohdan *4.1 Yleistä* raja-arvojen puitteisiin. Suuremmat jännitevaihtelut voivat aiheuttaa moottorin palamisen. Suuremmat jännitevaihtelut ovat merkkinä huonosta sähkönsyötöstä ja pumppua ei tule käyttää ennenkuin vika on korjattu.
2. Virrankulutus 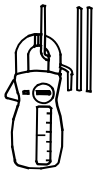 TM00 1372 5092	Mittaa jokaisen vaiheen virta. Mittaus suoritetaan pumpun vastapaineen ollessa vakio (jos mahdollista sillä tuotolla, jolla moottori on eniten kuormitettu). Suurin käyttövirta voidaan tarkistaa tyyppikilvestä.	3-vaihe moottoreissa ei virta-arvojen ero korkeimman ja matalimman vaihevirran välillä saa ylittää 5%. Jos näin kuitenkin on, tai jos virta-arvo ylittää suurimman käyttövirran, ovat seuraavat viat mahdollisia. • Moottorisuojan kosketuskärjet ovat palaneet. Vaihda kärjet tai kytkentärasia 1-vaihe käytössä. • Huono johdinkosketus, mahdollisesti kaapeliliitoksessa. Katso kohta 3. • Liian korkea tai liian alhainen syöttöjännite. Katso kohta 1. • Moottorin käämitykset oikosulussa tai osittain poikki. Katso kohta 3. • Vaurioitunut pumppu ylikuormittaa moottoria. Pumppu nostetaan ylös tarkastusta varten. • Moottorikäämien vastusarvo vaihtelee liikaa (3-vaihe). Muuta vaiheita vaihejärjestyksessä tasaisemmalle kuormitukselle. Jos tämä ei auta, katso kohta 3.
Kohtien 3 ja 4 mittaustarkistukset ovat tarpeettomia, jos verkkojännite ja virrankulutus ovat normaaleja.		
3. Käämitysvastus 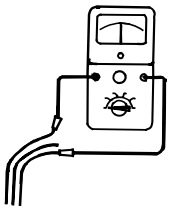 TM00 1373 5092	Irroita uppokaapelin johtimet syöttöverkosta. Mittaa käämitysvastus uppokaapelin johtimien välillä.	3-vaihe moottoreissa korkeimman ja matalimman arvon ero ei saa ylittää 10%. Jos ero ylittää sallitun, pumppu nostetaan ylös. Moottori ja uppokaapeli mitataan erikseen ja vialliset osat korjataan/vaihdetaan. **Huom.** 1-vaihe 3-johdinmoottoreissa käyttökäämi antaa alimman vastusarvon.
4. Eristysvastus 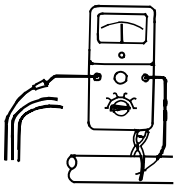 TM00 1374 5092	Irroita uppokaapelin johtimet syöttöverkosta. Mittaa eristysvastus jokaisen vaiheen ja maan (runko) välillä. Tarkista, että maadoitus on huolellisesti tehty.	Jos mitattu eristysvastus on alle 0,5 MΩ, nostetaan pumppu ylös moottori- tai kaapelikorjausta varten. Paikalliset säännökset voivat määritellä muita arvoja eristysvastukselle.

10. Hävittäminen

Tämä tuote tai sen osat on hävitettävä ympäristöystävällisellä tavalla:

1. Käytä yleisiä tai yksityisiä jätekeräilyn palveluja.
2. Ellei tämä ole mahdollista, ota yhteys lähimpään Grundfos-yhtiöön tai -huoltoliikkeeseen.

FIN

INDHOLDSFORTEGNELSE

Læs denne monterings- og driftsinstruktion før installation. Følg lokale forskrifter og gængs praksis ved installation og drift.

Denne instruktion dækker Grundfos dykmotorer, type MS og MMS, og Grundfos dykpumper, type SP, monteret med dykmotorer af typerne Grundfos MS eller MMS, Franklin 4"-8", Mercury 6"-12" og Pleuger 6"-12".

Er pumpen monteret med en anden dykmotor end Grundfos MS eller MMS, skal man være opmærksom på, at de tekniske data, der vedrører motoren, kan være forskellige fra de data, der er angivet i denne instruktion.

1. Levering og lagring

1.1 Levering

Grundfos dykpumper leveres fra fabrik i emballage, i hvilken de bør blive indtil installation.

Vær opmærksom på efter udpakning, at bøjningspåvirkninger kan medføre skævheder og skader på pumpen.

Bemærk: Pumperne bør blive i emballagen, indtil de placeres i vertikal stilling under installation.
Når pumpedelen og motoren leveres separat (lange pumper), skal motoren monteres på pumpen som beskrevet i afsnit *5.1 Montering af motoren på pumpen*.

Bemærk: Det ekstra dataskilt, som er vedlagt pumpen, monteres på installationsstedet.

Pumpen må ikke udsættes for unødige stød og rystelser.

1.2 Lagring og håndtering

Lagertemperatur

Pumpe: –20°C til +60°C.
Motor: –20°C til +70°C.

Motorerne skal lagres i et lukket og tørt rum med god ventilation.

Bemærk: Hvis motorer af typen MMS ligger på lager i mere end ét år, skal motorakselen drejes med hånden mindst én gang om måneden.
Hvis motoren har været på lager i mere end ét år før installation, skal motorens roterende dele adskilles og efterses før brug.

Undgå lagring i direkte sollys.

Hvis pumpen er pakket ud, skal den lagres horisontalt med understøtninger eller vertikalt for at undgå skævheder i pumpen. Sørg for, at den ikke kan rulle eller vælte. Ved lagring kan pumpen understøttes som vist på fig. 1.

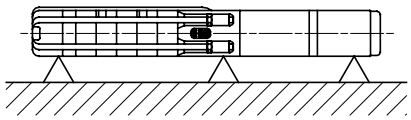

Fig. 1 Placering af pumpen ved lagring

1.2.1 Frostsikring

Hvis pumpen skal lægges på lager, efter at den har været brugt, skal den lagres frostfrit, eller det skal sikres, at motorvæsken er frostsikret.

2. Generelt

2.1 Anvendelse

Grundfos dykpumper, type SP, har et bredt anvendelsesområde inden for vandforsyning og væsketransport, såsom grundvandsforsyning til enkeltboliger eller vandværker, vandforsyning i gartnerier eller landbruget, grundvandsafsænkning og trykforøgning samt diverse industrielle opgaver.

Pumpen skal installeres, så indløbsdelen er helt neddykket i mediet. Pumpen kan bruges såvel horisontalt som vertikalt, se dog afsnit *3.2 Placeringskrav*.

2.2 Pumpemedier

Rene, tyndtflydende, **ikke-eksplosive** medier uden indhold af faste bestanddele eller fibre.

Vandets maksimale sandindhold må ikke overstige 50 g/m^3.
Et større sandindhold vil formindske pumpens levetid og forøge risikoen for tilstopning af pumpen.

Bemærk: Bruges pumpen til pumpning af et medie med en massefylde større end vands, skal der bruges en motor med tilsvarende større ydelse.

Ved pumpning af medier med større viskositet end vands kontaktes Grundfos.

Ved pumpning af medier med større aggressivitet end drikkevands bruges specialudførelserne SP A N, SP A R, SP N, SP R og SPE.

Maks. medietemperatur fremgår af afsnit *3.4 Medietemperaturer/køling*.

DK

2.3 Lydtryksniveau

Lydtryksniveauet er målt i henhold til de regler, der er fastsat i EF maskindirektivet 98/37/EF.

Lydtryksniveau for pumper

Gælder for pumper neddykket i vand uden ekstern regulerings-ventil.

Pumpetype	$\overline{L}_{pA}$ [dB(A)]
SP 1A	<70
SP 2A	<70
SP 3A	<70
SP 5A	<70
SP 8A	<70
SP 14A	<70
SP 17	<70
SP 30	<70
SP 46	<70
SP 60	<70
SP 77	<70
SP 95	<70
SP 125	79
SP 160	79
SP 215	82

Lydtryksniveau for motorer

Lydtryksniveauet for Grundfos MS og MMS motorer er mindre end 70 dB(A).

Andre motorfabrikater: Se monterings- og driftsinstruktion for disse motorer.

3. Klargøring

Før arbejdet på pumpen påbegyndes, skal det sikres, at forsyningsspændingen er afbrudt, og at den ikke uforvarende kan genindkobles.

3.1 Kontrol af væske i motoren

Dykmotorerne er fra fabrikken påfyldt en ikke-giftig specialvæske, som er frostsikker ned til –20°C.

Bemærk: Væskestanden i motoren skal kontrolleres, og om nød-vendigt skal efterfyldning foretages.

Bemærk: Hvis der foreligger frostfare, skal der bruges Grundfos specialvæske ved efterfyldning, ellers kan der bruges rent vand (dog **ikke** destilleret vand).

Efterfyldning af væske foretages som beskrevet i det følgende.

3.1.1 Grundfos dykmotorer MS 4000 og MS 402

Påfyldningsstudsen for motorvæske findes for:

MS 4000: i toppen af motoren.

MS 402: i bunden af motoren.

1. Placér dykpumpen som vist på fig. 2.
   Påfyldningsskruen skal være det øverste punkt på motoren.
2. Fjern skruen i påfyldningsstudsen.
3. Pump væske ind i motoren med fyldesprøjten, fig. 2, indtil væsken løber ud af påfyldningshullet.
4. Montér skruen i påfyldningsstudsen, og spænd tæt, før pum-pens stilling ændres.

Tilspændingsmomenter:

MS 4000: 3,0 Nm.

MS 402: 2,0 Nm.

Dykpumpen er nu klar til montering.

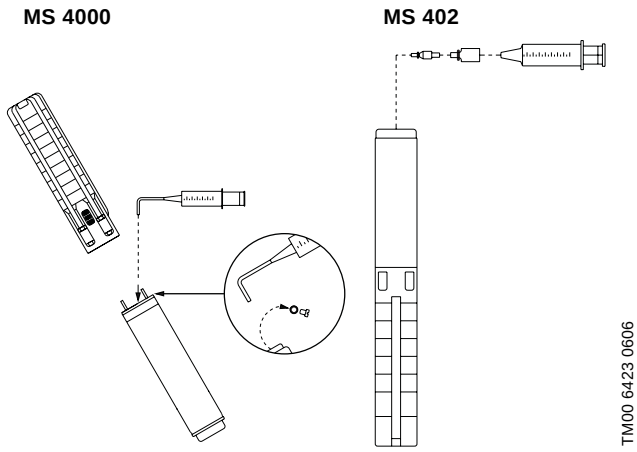

Fig. 2 Placering af pumpen under påfyldning – MS 4000 og MS 402

3.1.2 Grundfos dykmotorer MS 6000

- Hvis motoren er leveret fra lager, skal væskestanden kontrol-leres, inden motoren monteres på pumpen, se fig. 3.
- På pumper leveret direkte fra Grundfos er væskestanden kontrolleret.
- Ved service skal væskestanden kontrolleres, se fig. 3.

Fremgangsmåde for fyldning:

Påfyldningsstudsen for motorvæske findes øverst på motoren.

1. Placér dykpumpen som vist på fig. 3.
   Påfyldningsskruen skal være det øverste punkt på motoren.
2. Fjern skruen i påfyldningsstudsen.
3. Pump væske ind i motoren med fyldesprøjten, fig. 3, indtil væsken løber ud af påfyldningshullet.
4. Montér skruen i påfyldningsstudsen, og spænd tæt, før pum-pens stilling ændres.

Tilspændingsmoment: 3,0 Nm.

Dykpumpen er nu klar til montering.

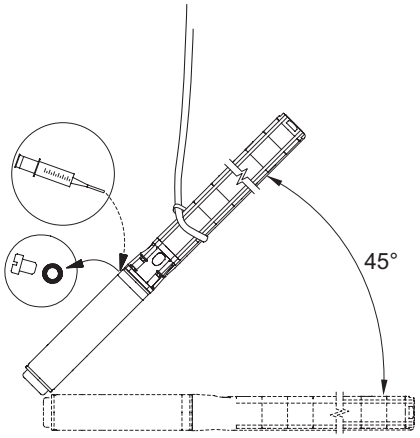

Fig. 3 Placering af pumpen under påfyldning – MS 6000

3.1.3 Grundfos dykmotorer MMS 6000, MMS 8000, MMS 10000 og MMS 12000

Fremgangsmåde for fyldning:

1. Placér motoren med en hældningsvinkel på 45°. Det øverste punkt på motoren skal vende opad, se fig. 4.
2. Fjern proppen A, og anbring en tragt i åbningen.
3. Fyld vand i motoren, indtil væsken i motoren løber ud ved A.
   Bemærk: Der må ikke bruges motorvæske, da den indeholder olie.
4. Fjern tragten, og montér proppen A.

Bemærk: Før motoren monteres på pumpen efter længere tid på lager, smøres akseltætningen med et par dråber vand og ved derefter at dreje akslen.

Dykpumpen er nu klar til montering.

DK

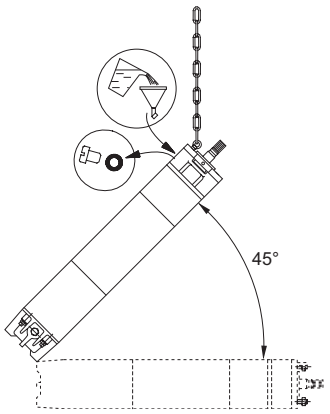

TM03 2065 3605

Fig. 4 Placering af motoren under påfyldning – MMS

3.1.4 Franklin dykmotorer fra 3 kW og opefter

Væskestanden i Franklin 4" og 6" dykmotorer kontrolleres ved at måle afstanden til den indbyggede gummimembran. Denne afstand kan måles ved at føre en målepind eller lign. ind gennem hullet i motorens bundstykke, indtil den rører ved membranen, fig. 5.
Bemærk: Gummimembranen må ikke beskadiges.

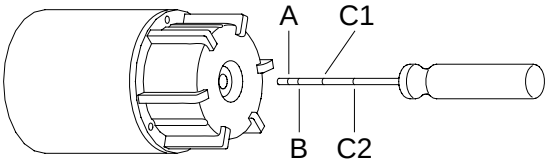

TM00 1353 5092

Fig. 5 Måling af afstanden fra bundstykket til membranen

Følgende tabel angiver den korrekte afstand fra bundstykkets yderside til membranen:

Motor	Mål	Afstand
Franklin 4", 0,25 til 3 kW (se fig. 6a)	A	8 mm
Franklin 4", 3 til 7,5 kW (se fig. 6b)	B	16 mm
Franklin 6", 4 til 45 kW (se fig. 6c)	C1	35 mm
Franklin 6", 4 til 22 kW (se fig. 6d)	C2	59 mm

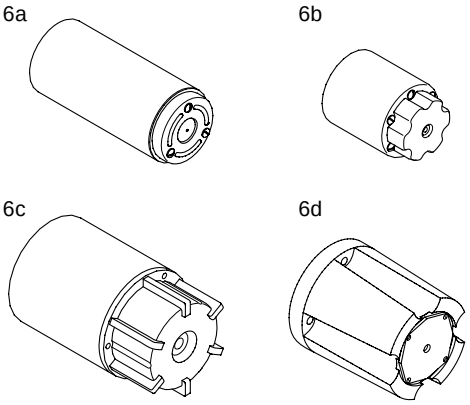

TM00 6422 3695

Fig. 6 Franklin dykmotorer

Er afstanden ikke korrekt, foretages der en justering som beskrevet i afsnit *3.1.5 Franklin dykmotorer*.

3.1.5 Franklin dykmotorer

Fremgangsmåde ved kontrol af motorvæske i Franklin 8" dykmotorer:

1. Vip filteret foran ventilen øverst på motoren ud med en skruetrækker. Har filteret kærv, skrues det ud. Placeringen af påfyldningsventilen fremgår af fig. 7.
2. Tryk fyldesprøjten mod ventilen, og indpump væske, fig. 7. Trykkes ventilkeglen for langt ind, kan den beskadiges, og derved kan ventilen blive utæt.
3. Fjern eventuel luft i motoren ved at trykke fyldesprøjtens spids let ind mod ventilen.
4. Efterfyld med væske efter udluftning, indtil der kommer væske retur, eller korrekt membranstilling opnås (Franklin 4" og 6").
5. Montér filteret efter væskepåfyldning.

Dykpumpen er nu klar til montering.

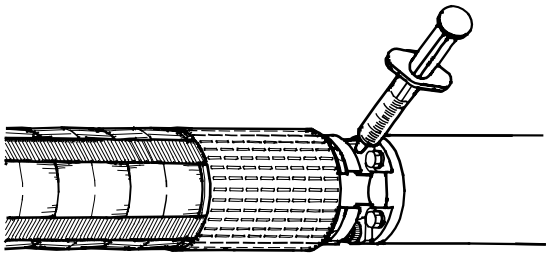

TM00 1354 5092

Fig. 7 Påfyldningsventilens placering

3.1.6 Mercury dykmotorer

Kontrol af motorvæske foretages som beskrevet for Franklin 8" motorer, se afsnit *3.1.5 Franklin dykmotorer*.

3.1.7 Pleuger dykmotorer

Kontrol af motorvæske foretages som beskrevet for Franklin 8" motorer, se afsnit *3.1.5 Franklin dykmotorer*.

3.2 Placeringskrav

Hvis pumpen skal placeres, således at den er tilgængelig, skal koblingsdelen afskærmes, f.eks. ved at montere pumpen i en kølekappe.

Afhængig af motortype kan pumpen installeres enten vertikalt eller horisontalt. En komplet liste over de motortyper, som er egnede til horisontal installation, er vist i afsnit *3.2.1*.

Hvis pumpen installeres horisontalt, **må** trykstudsen **ikke** komme under det horisontale plan, se fig. 8.

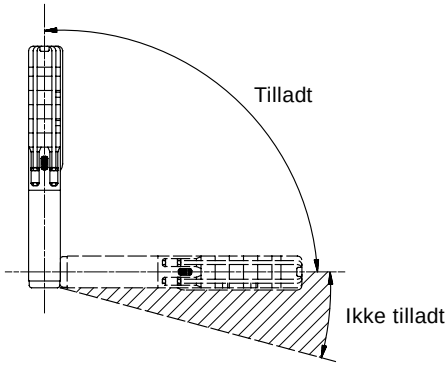

TM00 1355 5092

Fig. 8 Placeringskrav

Installeres pumpen horisontalt i en tank eller lign., anbefales det at montere den i en kølekappe.

3.2.1 Motorer for horisontal installation

Motortype	Effekt-størrelse 50 Hz	Effekt-størrelse 60 Hz
	[kW]	[kW]
MS	Alle størrelser	Alle størrelser
MMS 6000	3,7 til 18,5	3,7 til 18,5
MMS 8000	22,0 til 63,0	22,0 til 63,0
MMS 10000	75,0 til 110,0	75,0 til 110,0
MMS 12000	147,0 til 190,0	–

DK

Hvis Franklin 4" dykmotorer til og med 2,2 kW startes mere end 10 gange pr. døgn, anbefales det at montere motoren i en vinkel på mindst 15° over det horisontale plan for at mindske slitagen på upthrust-skiven.

Bemærk: Under drift skal pumpens indløbsdel altid være helt neddykket i mediet.

Hvis pumpen bruges til pumpning af varme medier (40° til 60°C), bør pumpe og installation afskærmes for at undgå berøring.

3.3 Pumpe-/motordiameter

Maks. pumpe-/motordiameter fremgår af tabellerne på side 146 og 147.

Det anbefales at kontrollere boringen med en kalibreringsdorn for at sikre fri passage.

3.4 Medietemperaturer/køling

Maks. medietemperatur og min. strømningshastighed af pumpemediet forbi motoren fremgår af følgende tabel.

Det anbefales at montere motoren over boringsfilteret for at opnå den bedste køling.

Bemærk: I tilfælde, hvor den anførte strømningshastighed ikke kan opnås, skal der monteres kølekappe.

Er der risiko for opbygning af slam, sand eller lign. omkring motoren, skal der ligeledes bruges kølekappe af hensyn til køling af motoren.

3.4.1 Maks. medietemperatur

Af hensyn til gummidelene i pumpe og motor må medietemperaturen ikke overstige 40°C (~105°F). Se også følgende tabel.

Drift ved medietemperaturer mellem 40°C og 60°C (~105°F og 140°F) er mulig, hvis alle gummidele udskiftes hvert tredie år.

Motor	Installation		
	Strømning forbi motor	Vertikal	Horisontal
Grundfos MS og MMS	Fri konvektion 0 m/s	20°C (~68°F)	Kølekappe anbefales
Grundfos MS	0,15 m/s	40°C (~105°F)	40°C (~105°F)
Grundfos MS I *	0,15 m/s	60°C (~140°F) Kølekappe anbefales	60°C (~140°F) Kølekappe anbefales
Grundfos MMS	0,15 m/s	25°C (~77°F)	25°C (~77°F)
Franklin 4"	0,08 m/s	30°C (~85°F)	30°C (~85°F)
Franklin 6" og 8"	0,16 m/s	30°C (~85°F)	30°C (~85°F)
Mercury	0,15 m/s	25°C (~77°F)	25°C (~77°F)
Pleuger	0,5 m/s	30°C (~86°F)	30°C (~86°F)

* Ved et omgivende tryk på min. 1 bar (1 MPa)

Bemærk: Ved fri konvektion forstås, at boringens diameter er mindst 2" større end dykmotorens diameter.

Andre motorfabrikater: Se motorens specifikationer.

3.5 Rørtilslutning

Hvis resonansstøj er et problem, anbefales det at bruge plastrør.

Bemærk: Plastrør anbefales kun til 4" pumper.

Når der bruges plastrør, skal pumpen sikres med en aflastet wire.

Vær opmærksom på, om de brugte plastrør kan tåle medietemperaturen og det tryk, som pumpen giver.

Brug kompressionskobling ved overgang fra pumpe til plastrør.

4. El-tilslutning

Før arbejdet på pumpen påbegyndes, skal det sikres, at forsyningsspændingen er afbrudt, og at den ikke uforvarende kan genindkobles.

4.1 Generelt

El-tilslutning skal foretages af en autoriseret el-installatør i overensstemmelse med de lokalt gældende regler.

Forsyningsspænding, påstemplet maks. strøm og cos φ fremgår af det medleverede dataskilt, som **skal** monteres på installationsstedet.

Krævet spændingskvalitet for Grundfos **MS** og **MMS** dykmotorer målt ved motorens klemmer er –10%/+6% af nominel spænding ved kontinuerlig drift (inkl. variation i forsyningsspændingen og tab i kabler).

Der skal også være spændingssymmetri, dvs. samme spændingsforskel mellem de enkelte faser. Se også afsnit *9. Motor- og kabelkontrol*, punkt 2.

Pumpen skal forbindes til jord.

Pumpen skal tilsluttes en ekstern netspændingsafbryder med en brydeafstand på minimum 3 mm i alle poler.

Hvis Grundfos MS motorer med indbygget temperaturtransmitter (Tempcon) ikke er installeret sammen med en MP 204 eller en tilsvarende Grundfos motorbeskyttelse, skal de tilsluttes en 0,47 μF kondensator, som er godkendt til fase-fase-drift (IEC 384-14), for at overholde EFs EMC direktiv (89/336/EØF). Kondensatoren skal tilsluttes de to faser, hvortil temperaturtransmitteren er tilsluttet, se fig. 9.

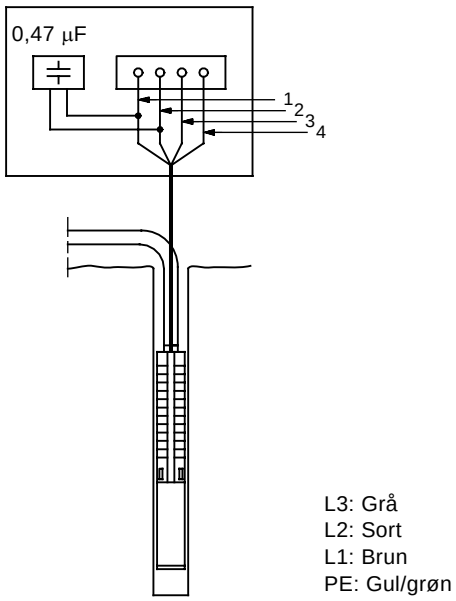

Fig. 9 Tilslutning af kondensator

Motorerne er viklet for direkte start eller Y/Δ-start, med startstrøm op til 4-6 gange motorens fuldlaststrøm.

Pumpens opløbstid er kun ca. 0,1 sek. Direkte start godkendes derfor normalt af el-selskabet.

DK

4.1.1 Frekvensomformerdrift

Grundfos motorer

3-fasede Grundfos motorer kan tilsluttes en frekvensomformer.

Bemærk: Hvis en Grundfos MS motor med temperaturtransmitter tilsluttes en frekvensomformer, vil en sikring i temperaturtransmitteren smelte, hvorved denne sættes ud af drift. Transmitteren kan ikke aktiveres igen, så motoren vil køre som en motor uden temperaturtransmitter.

Ønskes en temperaturtransmitter brugt, kan en Pt100 sensor til montering på dykmotoren købes hos Grundfos.

Ved frekvensomformerdrift er det ikke tilrådeligt at tilføre motoren en større frekvens end den nominelle (50 eller 60 Hz). I forbindelse med pumpedrift er det vigtigt aldrig at regulere frekvensen (og dermed hastigheden) længere ned, end at der stadig er den nødvendige strømning af væske forbi motoren til at sikre køling.

For at undgå beskadigelse af pumpedelen skal det sikres, at motoren stopper, når pumpens flow kommer under 0,1 x nominelt flow.

Afhængig af frekvensomformertypen kan denne forårsage, at motoren udsættes for skadelige spændingsspidser.

MS 402 motorer til og med 440 V forsyningsspænding (se typeskilt på motor) skal beskyttes mod spændingsspidser større end 650 V (peak-værdi) mellem tilslutningsterminalerne.

Øvrige motorer anbefales beskyttet mod spændingsspidser større end 850 V.

Ovenstående gene kan afhjælpes ved at montere et **RC-filter** mellem frekvensomformeren og motoren.

Eventuel forøget akustisk støj fra motoren kan afhjælpes ved at montere et **LC-filter**, som også vil fjerne spændingsspidserne fra frekvensomformeren.

For nærmere oplysninger, kontakt leverandøren af frekvensomformeren eller Grundfos.

Andet motorfabrikat end Grundfos

Kontakt Grundfos eller motorfabrikanten.

4.2 Motorbeskyttelse

4.2.1 1-fasede motorer

1-fasede dykmotorer, type MS 402, har indbygget termoafbryder og kræver derfor ikke yderligere beskyttelse af motoren.

Når motoren er termisk afbrudt, er der stadig spænding på motorens klemmer.
Når motoren er tilstrækkeligt afkølet, genstarter den automatisk.

1-fasede dykmotorer, type MS 4000, skal tilsluttes en motorbeskyttelse. Denne kan enten være indbygget i en kontrolboks eller være separat.

Franklin 4" PSC motorer skal tilsluttes et motorværn.

4.2.2 3-fasede motorer

Grundfos **MS** motorer kan leveres med eller uden en indbygget temperaturtransmitter.

Motorer **med** indbygget og funktionsdygtig temperaturtransmitter skal beskyttes med:

- et motorværn med termorelæ eller
- en MTP 75 og et motorværn med termorelæ eller
- en MP 204 og kontaktor(er).

Motorer **uden** eller **med en ikke-**funktionsdygtig temperaturtransmitter skal beskyttes med:

- et motorværn med termorelæ eller
- en MP 204 og kontaktor(er).

Grundfos **MMS** motorer har ikke indbygget temperaturtransmitter, men en Pt100 føler kan bestilles som tilbehør.

Motorer **med** Pt100 føler skal beskyttes med:

- et motorværn med termorelæ eller
- en MP 204 og kontaktor(er).

Motorer **uden** Pt100 føler skal beskyttes med:

- et motorværn med termorelæ eller
- en MP 204 og kontaktor(er).

4.2.3 Krav til indstilling af motorværn

Motorværnets udkoblingstid ved kold motor skal være mindre end 10 sek. ved 5 gange motorens påstemplede maks. strøm.

Bemærk: Er dette krav ikke opfyldt, bortfalder garantien på motoren.

For at sikre den bedste beskyttelse af dykmotoren bør indstillingen af motorværnet foretages efter følgende retningslinjer:

1. Indstil motorværnet på motorens påstemplede maks. strøm.
2. Start pumpen og lad den køre i en halv time ved normal ydelse.
3. Stil skalaviseren langsomt ned, indtil motorværnet kobler ud.
4. Stil motorværnsindstillingen 5% op.

Højst tilladte indstilling er motorens påstemplede maks. strøm.

Ved motorer koblet for Y/Δ-start er fremgangsmåden ved indstilling af motorværnet som nævnt ovenfor, men motorværnsindstillingen må maksimalt være som følger:

Motorværnsindstilling = Påstemplet maks. strøm x 0,58.

Højst tilladte opstartstid ved Y/Δ-start eller autotransformerstart er 2 sek.

4.3 Lynbeskyttelse

Installationen kan forsynes med en særlig overspændingsbeskytter, der beskytter motoren mod overspænding i forsyningsnettet forårsaget af f.eks. lynnedslag i området, se fig. 10.

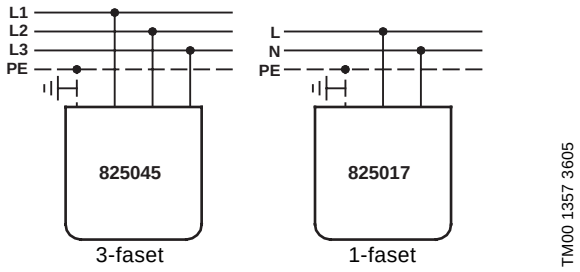

Fig. 10 Montering af overspændingsbeskytter

Overspændingsbeskytteren sikrer dog ikke mod direkte lynnedslag i installationen.

Overspændingsbeskytteren tilsluttes installationen så tæt ved motoren som muligt og i øvrigt i henhold til gældende installationsforskrifter.
Grundfos kan levere lynbeskyttere.

Dykmotorer, type MS 402, har dog et så højt isolationsniveau, at yderligere lynbeskyttelse er unødvendig.

Til Grundfos 4" dykmotorer kan leveres et specielt kabelsamlesæt med indbygget overspændingsbeskyttelse (delnr. 799911 / 799912).

4.4 Valg af dykkabel

Dykkablet skal kunne tåle at være permanent neddykket i det aktuelle medie og ved den aktuelle temperatur.

Grundfos kan levere dykkabler til et bredt udsnit af installationer.

Følgende krav stilles til dykkablets tværsnit (q):

1. Dykkablet skal være dimensioneret til motorens påstemplede maks. strøm (I).
2. Tværsnittet skal vælges så stort, at spændingsfaldet over kablet er acceptabelt.

Det største af de i punkt 1. og 2. fundne tværsnit skal bruges.

DK

Ad 1: Følgende tabel angiver Grundfos dykkablers strømværdi (dvs. den maksimale strøm, som dykkablet kan tåle) ved en omgivelsestemperatur på maks. 30°C.
Kontakt Grundfos, hvis omgivelsestemperaturen er højere end 30°C.

Dykkablet vælges, således at motorens påstemplede maks. strøm ikke overstiger strømværdien (I_s).

Ved Y/Δ-start vælges kablerne dog, således at 0,58 x motorens påstemplede maks. strøm ikke overstiger kablernes strømværdi (I_s).

q [mm^2]	I_s [A]	q [mm^2]	I_s [A]
1,5	18,5	50	153
2,5	25	70	196
4	34	95	238
6	43	120	276
10	60	150	319
16	80	185	364
25	101	240	430
35	126	300	497

Bruges der ikke Grundfos dykkabler, skal tværsnittet vælges ud fra de aktuelle kablers strømværdier.

Ad 2:
Bemærk: Dykkablet skal vælges med så stort tværsnit, at kravene til spændingskvaliteten, som er beskrevet i afsnit *4.1 Generelt*, opfyldes.

Dykkablets tværsnit bestemmes med hensyn til spændingsfald ved hjælp af diagrammerne på side 148 og 149, hvor

I = Motorens påstemplede maks. strøm.
Ved Y/Δ-start er
I = motorens påstemplede maks. strøm x 0,58.

Lx = Kablets længde omregnet til et spændingsfald på 1% af nominel spænding.

$$Lx = \frac{\text{dykkablets længde}}{\text{tilladeligt spændingsfald i \%}}$$

q = Dykkablets tværsnit.

Mellem den aktuelle I-værdi og Lx-værdi tegnes en ret linje. Hvor linjen skærer q-aksen, vælges det tværsnit, som ligger lige over skæringspunktet.

Diagrammerne er udført på basis af formlerne:

1-faset dykmotor

$$L = \frac{U \times \Delta U}{I \times 2 \times 100 \times \left(\cos\varphi \times \frac{\rho}{q} + \sin\varphi \times XI\right)}$$

3-faset dykmotor

$$L = \frac{U \times \Delta U}{I \times 1{,}73 \times 100 \times \left(\cos\varphi \times \frac{\rho}{q} + \sin\varphi \times XI\right)}$$

hvor

L = Dykkabellængde [m]
U = Nominel spænding [V]
ΔU = Spændingsfald [%]
I = Motorens påstemplede maks. strøm [A]
cos φ = 0,9
ρ = Specifik modstand: 0,02 [Ωmm^2/m]
q = Dykkabeltværsnit [mm^2]
sin φ = 0,436
Xl = Induktiv modstand: 0,078 x 10^{-3} [Ω/m]

4.5 Styring af 1-faset MS 402

1-fasede MS 402 motorer har indbygget motorbeskyttelse, som udkobler motoren ved for høj viklingstemperatur, men motoren forsynes stadig med spænding. Dette skal man være opmærksom på, når motoren indgår i en styring.

Indgår f.eks. en kompressor i forbindelse med et okkerfilter i en styring, vil kompressoren til stadighed køre, når motorbeskyttelsen har udkoblet motoren, hvis der ikke er truffet særlige forholdsregler.

4.6 Tilslutning af 1-fasede motorer

4.6.1 2-wire motorer

Grundfos MS 402 2-wire motorer har indbygget motorbeskyttelse og startanordning og kan derfor tilsluttes nettet direkte, se fig. 11.

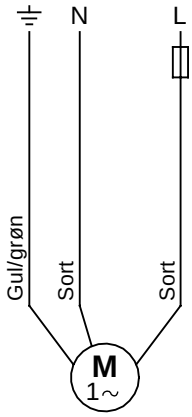

TM00 1358 5092

Fig. 11 2-wire motorer

4.6.2 PSC motorer

PSC motorer tilsluttes nettet via en driftskondensator, som skal være dimensioneret til kontinuerlig drift.

Korrekt kondensatorstørrelse vælges ud fra følgende tabel:

Motor	Kondensator
0,25 kW	12,5 µF / 400 V / 50 Hz
0,37 kW	16 µF / 400 V / 50 Hz
0,55 kW	20 µF / 400 V / 50 Hz
0,75 kW	30 µF / 400 V / 50 Hz
1,10 kW	40 µF / 400 V / 50 Hz
1,50 kW	50 µF / 400 V / 50 Hz
2,20 kW	75 µF / 400 V / 50 Hz

Grundfos MS 402 PSC motorer har indbygget motorbeskyttelse og tilsluttes nettet som vist i fig. 12.

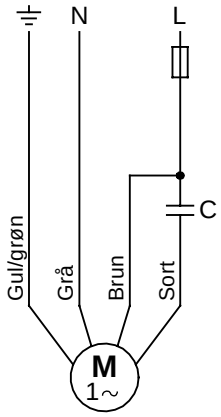

TM00 1359 5092

Fig. 12 PSC motorer

Se www.franklin-electric.com og fig. 13.

DK

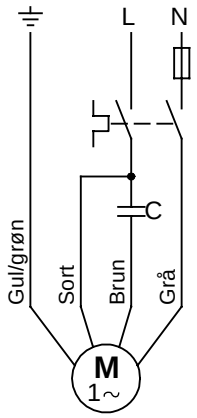

TM00 1361 1200

Fig. 13 Franklin dykmotorer

4.6.3 3-wire motorer

Grundfos MS 4000 3-wire motorer skal tilsluttes nettet via en Grundfos kontrolboks SA-SPM 2 eller 3 med indbygget motor-beskyttelse.

Grundfos MS 402 3-wire motorer har indbygget motorbeskyttelse og skal tilsluttes nettet via en Grundfos kontrolboks SA-SPM 2 eller 3 uden motorbeskyttelse.

Tilslutningen af MS 4000 og MS 402 fremgår af følgende tabel:

Motor	Kabel	Kontrolboks	Net
Til og med 0,75 kW	Grå	1 N	N
	Brun	2 L	L
	Sort	3 SA-SPM 2	
	Gul/grøn		PE
Fra 1,10 kW	Grå	1 N	N
	Brun	2 L	L
	Sort	3 SA-SPM 3	
	Gul/grøn		PE

4.7 Tilslutning af 3-fasede motorer

De 3-fasede dykmotorer skal beskyttes, se afsnit *4.2.2 3-fasede motorer*.

Angående el-tilslutning ved anvendelse af MP 204 henvises til dennes separate monterings- og driftsinstruktion.

Ved anvendelse af et traditionelt motorværn skal el-tilslutningen udføres som beskrevet i det følgende.

4.7.1 Kontrol af omdrejningsretning

Bemærk: Pumpen må kun startes, når indløbsdelen er helt ned-dykket i mediet.

Når pumpen er tilsluttet nettet, konstateres pumpens korrekte omdrejningsretning på følgende måde:

1. Start pumpen, og mål vandmængde og afgangstryk.
2. Stop pumpen, og ombyt to faser i nettilslutningen. Ved motorer med Y/Δ-start ombyttes U1 med V1 og U2 med V2.
3. Start pumpen, og mål vandmængde og afgangstryk.
4. Stop pumpen.
5. Sammenlign resultaterne under punkt 1. og 3. Største vand-mængde og afgangstryk angiver korrekt omdrejningsretning.

4.7.2 Grundfos motorer, direkte start

Tilslutning af Grundfos dykmotorer viklet for direkte start fremgår af følgende tabel og fig. 14.

Net	Kabel/tilslutning
	Grundfos 4" og 6" motorer
PE	PE (gelb/grün)
L1	U (braun)
L2	V (schwarz)
L3	W (grau)

Kontrol af omdrejningsretning foretages som beskrevet i afsnit *4.7.1 Kontrol af omdrejningsretning*.

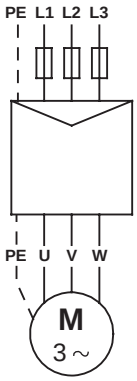

TM03 2099 3705

Fig. 14 Grundfos motorer, direkte start

4.7.3 Grundfos motorer, Y/Δ-start

Tilslutning af Grundfos dykmotorer viklet for Y/Δ-start fremgår af følgende tabel og fig. 15.

Tilslutning	Grundfos 6" motorer
PE	PE (gul/grøn)
U1	Brun
V1	Sort
W1	Grå
W2	Brun
U2	Sort
V2	Grå

Kontrol af omdrejningsretning foretages som beskrevet i afsnit *4.7.1 Kontrol af omdrejningsretning*.

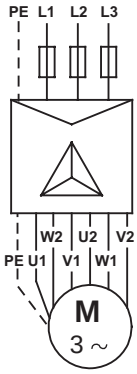

TM03 2100 3705

Fig. 15 Grundfos motorer, Y/Δ-start

DK

Ønskes det ikke at bruge Y/Δ-start, men direkte start, tilsluttes dykmotorerne som vist i fig. 16.

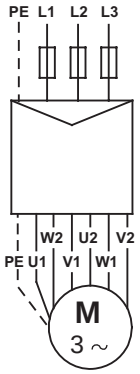

TM03 2101 3705

Fig. 16 Grundfos motorer, direkte start

4.7.4 Tilslutning ved ukendt kabelmærkning/tilslutning

Vides det ikke, hvor de enkelte ledere skal tilsluttes nettet for at få korrekt omdrejningsretning, foretages følgende:

Motorer viklet for direkte start

Pumpen tilsluttes nettet, som det formodes rigtigt.

Herefter kontrolleres omdrejningsretningen som beskrevet i afsnit *4.7.1 Kontrol af omdrejningsretning*.

Motorer viklet for Y/Δ-start

Motorens viklinger bestemmes ved hjælp af et ohmmeter, og ledersættene til de enkelte viklinger benævnes derefter som henholdsvis U1-U2, V1-V2 og W1-W2, se fig. 17.

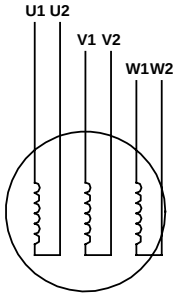

TM00 1367 5092

Fig. 17 Ukendt kabelmærkning/tilslutning – motorer viklet for Y/Δ-start

Ønskes Y/Δ-start, tilsluttes lederne som vist i fig. 15.

Ønskes direkte start, tilsluttes lederne som vist i fig. 16.

Herefter kontrolleres omdrejningsretningen som beskrevet i afsnit *4.7.1 Kontrol af omdrejningsretning*.

4.7.5 Franklin, Mercury og Pleuger motorer

Tilslutning af Franklin, Mercury og Pleuger dykmotorer fremgår af afsnit *4.7.4 Tilslutning ved ukendt kabelmærkning/tilslutning*.

5. Pumpeinstallation

Før ethvert arbejde på pumpen/motoren påbegyndes, skal det sikres, at forsyningsspændingen er afbrudt, og at den ikke uforvarende kan genindkobles.

5.1 Montering af motoren på pumpen

Når pumpedelen og motoren leveres separat (lange pumper), skal motoren monteres på pumpen på følgende måde:

1. Brug halsjern ved håndtering af motoren.
2. Anbring motoren i vertikal stilling ved borerørsafslutningen, se fig. 18.

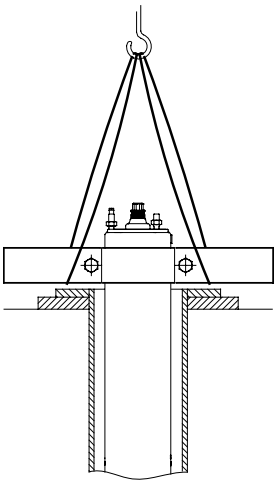

TM00 5259 2402

Fig. 18 Motor i vertikal stilling

3. Løft pumpedelen ved hjælp af halsjern, som monteres på forlængerrøret, se fig. 19.

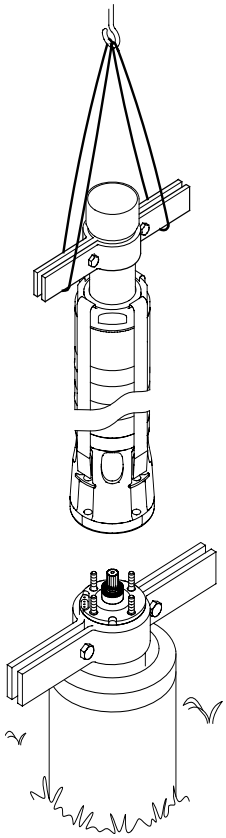

TM02 5263 2502

Fig. 19 Pumpen løftes på plads

4. Anbring pumpedelen på toppen af motoren.
5. Montér og spænd møtrikkerne, se følgende tabel.

DK

Bolte og møtrikker, som fastholder spændebåndene til pumpen, skal krydsspændes til de momenter, som er angivet i følgende tabel:

Spændebånd Bolt/møtrik	Moment [Nm]
M8	18
M10	35
M12	45
M16	120
SP 215, 50 Hz, med mere end 8 trin SP 215, 60 Hz, med mere end 5 trin	150

Bemærk: Påse, at koblingen mellem pumpe og motor går i korrekt indgreb.

Ved montering af motoren på pumpedelen skal møtrikkerne krydsspændes til de momenter, som er angivet i følgende tabel:

Pumpe/motor Støtteboltdiameter	Moment [Nm]
M8	18
M12	70
M16	150
M20	280

Bemærk: Påse, at pumpen er lige efter endt samling.

5.2 Demontering/montering af kabelbeskytter

For demontering og montering af kabelbeskytter(e), se side 150 og 151.

Er kabelbeskytteren skruet på pumpen, f.eks. ved SP 215 og pumper i kappe, demonteres/monteres kabelbeskytteren ved hjælp af skruer.

Bemærk: Påse, at pumpen er lige efter montering af kabelbeskytter.

5.3 Montering af dykkabel

5.3.1 Grundfos dykmotorer

Før monteringen af dykkablet i motoren skal det sikres, at kabelstikket er rent og tørt.

For at lette montagen smøres kabelstikkets gummidele med ikkeledende silikonepasta.

Skruerne, som fastholder kablet, fastspændes til følgende moment:

MS 402: 2,0 Nm.
MS 4000: 2,0 Nm.
MS 6000: 4,0-5,0 Nm.
MMS 6000: 10 Nm.
MMS 12000: 15 Nm.

5.4 Rørtilslutning

Skal der ved montering af stigerør bruges værktøj, f.eks. en kædetang, til fastholdelse af pumpen, må denne kun anbringes på pumpens topstykke.

Gevindsamlinger på stigerøret skal alle være med velskårne gevind, som fast sammenspændt sikrer, at samlingerne ikke løsnes på grund af de vridningsmomenter, der forekommer under pumpens start og stop.

Den gevindende, som skrues i pumpen, må ikke være længere end tilslutningsgevindet i pumpen.

Hvis resonansstøj er et problem, anbefales det at bruge plastrør.

Bemærk: Plastrør anbefales kun til 4" pumper.

Når der bruges plastrør, skal pumpen sikres med en aflastet wire, der fastgøres til pumpens topstykke, se fig. 20.

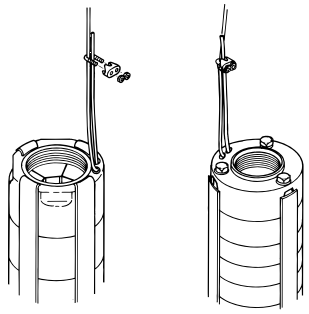

Fig. 20 Fastgøring af wire

Brug kompressionskobling ved overgang fra pumpe til plastrør.

Bruges flangerør, bør flangerne have en udskæring for dykkabel og eventuel pejleslange.

5.5 Maks. installationsdybde under vandspejl

Grundfos MS 402: 150 m.
Grundfos MS 4000: 600 m.
Grundfos MS 6000: 600 m.
Grundfos MMS: 250 m.
Franklin motorer: 350 m.
Mercury motorer: 350 m.
Pleuger motorer: 350 m.

5.6 Kabelbindere

Kabelbindere skal bruges for hver ca. 3 m til fastgørelse af dykkabel og eventuel wire til pumpens stigerør.

Grundfos kan levere kabelbindersæt. Sættet består af et 1,5 mm tykt gummibånd + 16 stk. låse.

Montering: Afklip gummibåndet, således at stykket uden slids bliver så langt som muligt.
Sæt en lås i den første slids.
Placér wiren langs dykkablet, fig. 21.

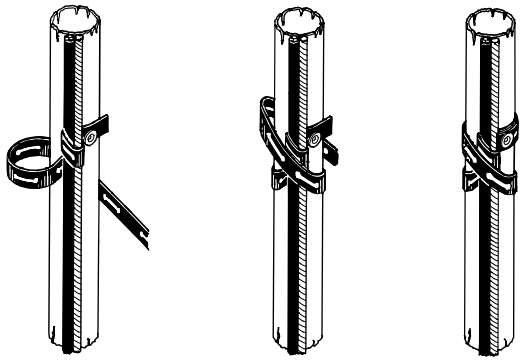

Fig. 21 Montering af kabelbindere

Vikl gummibåndet én gang rundt om wire og dykkabel.
Vikl derefter båndet stramt mindst to gange om rør, wire og dykkabel.
Tryk slidsen ned over låsen, og afklip båndet.

Ved større kabeltværsnit er det nødvendigt at vikle båndet om flere gange.

Bruges plastrør, skal dykkablet have et slip mellem hver kabelbinding på grund af plastrørenes forlængelse under belastning.

Bruges flangerør, foretages desuden binding over og under hver flangesamling.

5.7 Nedsænkning af pumpen

Før nedsænkning af pumpen anbefales det at kontrollere boringen med en kalibreringsdorn for at sikre fri passage.

Sænk pumpen forsigtigt ned i boringen, så motorkablet og dykkablet ikke beskadiges.

Bemærk: Løft ikke pumpen i motorkablet.

DK

5.8 Installationsdybde

Det dynamiske vandspejl skal altid være over pumpens indløbsdel, se afsnit *3.2 Placeringskrav* og fig. 22.

Min. tilløbstryk er angivet i pumpens NPSH kurve.
Min. sikkerhedstillæg bør være 1,0 mVS.

Det anbefales at montere pumpen, således at motordelen er over boringsfilteret for at opnå den bedste køling, se afsnit *3.4 Medietemperaturer/køling*.

Afslut med borerørsafslutning, når pumpen er i ønsket dybde.

Slæk sikringswiren så meget, at denne netop er ubelastet, og fastgør derefter wiren med wirelåse til borerørsafslutningen.

Bemærk: Ved pumper monteret med plastrør må der ved pumpens dybdeplacering tages hensyn til plastrørenes forlængelse under belastning.

6. Opstart og drift

6.1 Opstart

Når pumpen er forbundet korrekt og er nedsænket i pumpemediet, startes den med afspærringsventilen åbnet til ca. 1/3 af maks. kapacitet.

Omdrejningsretningen skal kontrolleres som beskrevet i afsnit *4.7.1 Kontrol af omdrejningsretning*.

Forefindes urenheder i vandet, åbnes ventilen gradvist, efterhånden som vandet bliver rent. Pumpen må ikke standses, før vandet er helt rent, da der i modsat fald er risiko for tilstopning af pumpedelene og kontraventilen.

Samtidig med åbning af ventilen til ønsket kapacitet kontrolleres vandspejlsafsænkningen for at undgå eventuel tørløb.

Det dynamiske vandspejl skal altid være over pumpens indløbsdel, se afsnit *3.2 Placeringskrav* og fig. 22.

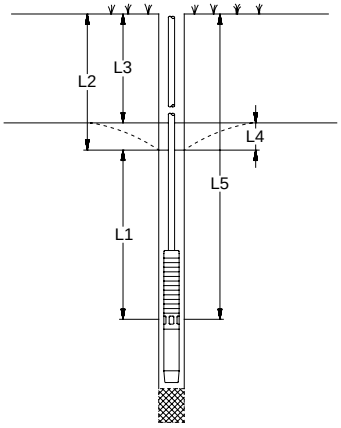

TM00 1041 3695

Fig. 22 Sammenligning af de forskellige vandspejle

L1: Min. installationsdybde under dynamisk vandspejl. Anbefales min. 1 meter.

L2: Dybde til dynamisk vandspejl.

L3: Dybde til statisk vandspejl.

L4: Afsænkning. Dette er forskellen mellem dynamisk og statisk vandspejl.

L5: Installationsdybde.

Hvis pumpen kan pumpe mere vand, end boringen kan yde, anbefales det at bruge Grundfos kontrolenhed, type MP 204, eller anden form for tørløbssikring.

Uden tørløbssikring er der risiko for, at vandspejlet afsænkes til pumpens indløbsdel, hvorved der suges luft.

Bemærk: Længere tids drift med luft i vandet kan skade pumpen og nedsætter kølingen af motoren.

6.2 Drift

6.2.1 Min. flow

Af hensyn til motorens køling må pumpens ydelse ikke indstilles lavere, end at kølekravene i afsnit *3.4 Medietemperaturer/køling* er opfyldt.

6.2.2 Start/stop-interval

Motortype	Antal starter
MS 402	Min. 1 pr. år anbefales. Maks. 100 pr. time. Maks. 300 pr. døgn.
MS 4000	Min. 1 pr. år anbefales. Maks. 100 pr. time. Maks. 300 pr. døgn.
MS 6000	Min. 1 pr. år anbefales. Maks. 30 pr. time. Maks. 300 pr. døgn.
MMS 6000	Min. 1 pr. år anbefales. Maks. 15 pr. time. Maks. 360 pr. døgn.
MMS 8000	Min. 1 pr. år anbefales. Maks. 10 pr. time. Maks. 240 pr. døgn.
MMS 10000	Min. 1 pr. år anbefales. Maks. 8 pr. time. Maks. 190 pr. døgn.
MMS 12000	Min. 1 pr. år anbefales. Maks. 5 pr. time. Maks. 120 pr. døgn.
Franklin	Min. 1 pr. år anbefales. Maks. 100 pr. døgn.
Mercury 6"	Min. 1 pr. år anbefales. Maks. 20 pr. time.
Mercury 8"	Min. 1 pr. år anbefales. Maks. 15 pr. time.
Mercury 10"	Min. 1 pr. år anbefales. Maks. 10 pr. time.
Mercury 12"	Min. 1 pr. år anbefales. Maks. 6 pr. time.
Pleuger	Min. 1 pr. år anbefales. Maks. 100 pr. døgn.

7. Vedligeholdelse og service

Pumperne er vedligeholdelsesfri.

Alle pumper er lette at servicere.

Grundfos leverer Service Kits og serviceværktøj til pumperne.

Pumperne kan serviceres på et Grundfos serviceværksted.

Hvis en pumpe har været brugt til et medie, der er sundhedsfarligt eller giftigt, vil pumpen blive klassificeret som forurenet.

Ønskes en forurenet pumpe serviceret af Grundfos, skal Grundfos kontaktes med oplysninger om pumpemediet m.m., *før* pumpen returneres for service. I modsat fald kan Grundfos nægte at modtage og servicere pumpen.

Eventuelle omkostninger forbundet med returneringen af pumpen afholdes af kunden.

DK

8. Fejlfinding

Fejl	Årsag	Afhjælpning
1. Pumpen kører ikke.	a) Sikringerne er brændt.	Udskift sikringerne. Brænder de nye sikringer også, kontrolleres el-installationen og dykkablet.
	b) HFI-relæ, FI-relæ eller fejlspændings-afbryder er udkoblet.	Indkobl relæet eller afbryderen.
	c) Ingen elektricitetsforsyning.	Kontakt el-selskabet.
	d) Motorbeskyttelsen er udløst.	Indkobl motorbeskyttelsen (sker automatisk eller skal foretages manuelt). I tilfælde af ny udløsning kontrolleres spændingen. Er spændingen i orden. se punkt e) - h).
	e) Motorværn/kontaktor er defekt.	Udskift motorværnet/kontaktoren.
	f) Startanordning er defekt.	Reparér/udskift startanordning.
	g) Styrestrømskredsløbet er afbrudt eller defekt.	Kontrollér el-installationen.
	h) Tørløbssikringen har afbrudt spændingen til pumpen på grund af for lavt vandspejl.	Kontrollér vandspejlet. Er dette i orden, kontrolleres tørløbssikringen.
	i) Pumpe/dykkabel er defekt.	Reparér/udskift pumpen/kablet.
2. Pumpen kører, men giver ikke vand.	a) Afspærringsventilen er lukket.	Åbn ventilen.
	b) Ingen vand eller for lille vandstand i boringen.	Se punkt 3 a).
	c) Kontraventilen er blokeret i lukket stilling.	Træk pumpen op, og rens eller udskift ventilen.
	d) Indløbssien er tilstoppet.	Træk pumpen op, og rens indløbssien.
	e) Pumpen er defekt.	Reparér/udskift pumpen.
3. Pumpen kører med nedsat kapacitet.	a) Afsænkningen af vandspejlet er større end beregnet.	Forøg pumpens installationsdybde, reducér pumpeydelsen, eller udskift pumpen til en pumpe med mindre kapacitet.
	b) Forkert omdrejningsretning.	Se afsnit *4.7.1 Kontrol af omdrejningsretning*.
	c) Ventiler i afgangsledning er delvis lukkede/blokerede.	Efterse og evt. rens/udskift ventilerne.
	d) Afgangsledningen er delvis stoppet af urenheder (okker).	Rens/udskift afgangsledningen.
	e) Kontraventilen i pumpen er delvis blokeret.	Træk pumpen op, og rens/udskift ventilen.
	f) Pumpe og stigerør er delvis stoppet af urenheder (okker).	Træk pumpen op. Kontrollér og rens eller evt. udskift pumpen. Rens rørene.
	g) Pumpen er defekt.	Reparér/udskift pumpen.
	h) Lækage i rørinstallationen.	Kontrollér og reparér rørinstallationen.
	i) Stigerøret er defekt.	Udskift stigerøret.
4. Hyppige start og stop.	a) Trykafbryderens differens mellem start- og stoptryk er for lille.	Forøg differensen. Stoptrykket må dog ikke overstige hydroforens arbejdstryk, og starttrykket skal være så højt, at det sikrer tilstrækkelig vandforsyning.
	b) Den automatiske vandstandskontrol eller niveauafbrydere i reservoir er ikke installeret korrekt.	Justér elektroderne/niveauafbryderne til rette indbyrdes afstand, som sikrer passende tid mellem indkobling og udkobling af pumpen. Se monterings- og driftsinstruktion for den brugte automatik. Kan intervallerne mellem stop/start ikke ændres ved automatikken, kan pumpens kapacitet eventuelt reduce-res ved afgangsventilen.
	c) Kontraventilen er utæt eller sidder fast i halvåben position.	Træk pumpen op, og rens eller udskift kontraventilen.
	d) Luftvolumenet i hydroforen/membranbeholderen er for lille.	Justér hydroforens/membranbeholderens luftvolumen i henhold til dennes monterings- og driftsinstruktion.
	e) Hydrofor/membranbeholder er for lille.	Forøg hydrofor-/membranbeholderkapacitet ved udskiftning eller supplering.
	f) Membranen i membranbeholderen er defekt.	Kontrollér membranbeholderen.

DK

9. Motor- og kabelkontrol

1. Netspænding 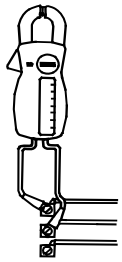 TM00 1371 5092	Mål med et voltmeter spændingen mellem faserne. For 1-fasede motorer måles mellem fase og nul eller mellem to faser, afhængig af nettype. Voltmeteret forbindes til klemmerne ved tilslutningsstedet.	Spændingen skal ved belastning ligge inden for intervallet, som er angivet i afsnit *4.1 Generelt*. Større spændingsvariation kan medføre afbrænding af motoren. Stor variation i netspændingen er tegn på dårlig elektricitets-forsyning, og pumpen standses, indtil fejlen er rettet.
2. Strømforbrug 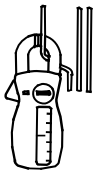 TM00 1372 5092	Mål strømmen i hver fase. Målingen skal udføres, mens pumpen kører med et konstant afgangstryk (hvis muligt ved en kapacitet, hvor motoren er mest belastet). Maks. driftsstrøm kan aflæses på data-skiltet.	Ved 3-fasede motorer må forskellen mellem fasen med det højeste strømforbrug og strømmen i fasen med det laveste strømforbrug ikke overstige 5%. Gør den det, eller overstiger strømmen den maksimale drifts-strøm, foreligger følgende fejlmuligheder: • Kontakterne i motorværnet er brændt. Udskift kontakterne eller kontrolboks ved 1-faset drift. • Dårlig ledningsforbindelse, eventuelt i kabelsamling. Se punkt 3. • For høj eller for lav netspænding. Se punkt 1. • Motorviklingerne er kortsluttet eller delvis afbrudt. Se punkt 3. • Beskadiget pumpe overbelaster motoren. Pumpen trækkes op for eftersyn. • Motorviklingernes modstandsværdi har for stor forskel (3-faset). Flyt faserne i fasefølge til mere ensartet belast-ning. Hjælper dette ikke, se punkt 3.
Punkt 3 og 4 er ikke påkrævet, når netspænding og strømforbrug er normal.		
3. Viklingsmodstand 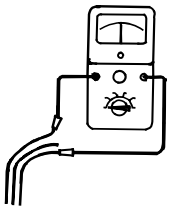 TM00 1373 5092	Adskil dykkablet fra nettet. Mål viklingsmodstanden mellem lederne på dykkablet.	Ved 3-fasede motorer må forskellen mellem højeste og laveste værdi ikke overstige 10%. Er afvigelsen over tilladeligt, trækkes pumpen op. Motor, motorkabel og dykkabel måles hver for sig, og defekte dele repareres/udskiftes. **Bemærk:** Ved 1-fasede 3-wire motorer vil driftsviklingen antage den laveste modstandsværdi.
4. Isolationsmodstand 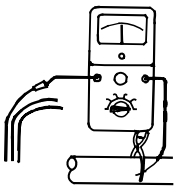 TM00 1374 5092	Adskil dykkablet fra nettet. Mål isolationsmodstanden mellem hver fase og jord (stel). Kontrollér, at jordforbindelsen er omhyggeligt udført.	Er isolationsmodstanden under 0,5 MΩ, anbefales det at optage pumpen for motor- eller kabelreparation. Lokalt gældende regler kan fastsætte andre værdier for isola-tionsmodstanden.

10. Bortskaffelse

Dette produkt eller dele deraf skal bortskaffes på en miljørigtig måde:

1. Brug de offentlige eller godkendte, private renovations-ordninger.
2. Hvis det ikke er muligt, kontakt nærmeste Grundfos-selskab eller -serviceværksted.

DK

Pump			Maximum diameter of pump/motor [mm]								
			Motor								
Type	Thread	Flange	Direct-on-line starting					Star-delta starting			
			4"	6"	8"	10"	12"	6"	8"	10"	12"
SP 1A	**Rp 1¼**		101								
SP 2A	**Rp 1¼**		101								
	***R 1¼**		108								
SP 3A	**Rp 1¼**		101								
SP 5A	**Rp 1½**		101	138							
	***R 1½**			138							
SP 8A	**Rp 2**		101	138							
	***R 2**			140							
SP 14A	**Rp 2**		101								
SP 17	**Rp 2½**		131	140				143			
	***R 3**			169	192			175	192		
SP 30	**Rp 3**		137	143	192			147	192		
	***R 3**				192				192		
SP 46	**Rp 3**		141	145	192			150	192		
	Rp 4		145	147	192			153	192		
	***R 4**				192				192		
SP 60	**Rp 3**		141	145				150			
	Rp 4		145	147	192			153	192		
SP 77	**Rp 5**			178	197			186	205		
		5"		200	200			200	205		
SP 95	**Rp 5**			178	197			186	205		
		5"		208	208			212	212		
SP 125	**Rp 6**			211	218			218	232		
		6"		222	230			226	239		
SP 160	**Rp 6**			211	218			218	227		
		6"		211	218			218	227		
SP 215	**Rp 6**			241	241	248	286	247	247	259	286
		6"		241	241	248	286	247	247	259	286

*) Pump in sleeve

Pump			Maximum diameter of pump/motor [mm]				
			Motor				
Type	Thread	Flange	Pump in flow sleeve				
			4"	6"	8"	10"	12"
SP 1A	**Rp 1¼**		125				
SP 2A	**Rp 1¼**		125				
	R 1¼		125				
SP 3A	**Rp 1¼**		125	200			
SP 5A	**Rp 1½**		125	200			
	R 1½			200			
SP 8A	**Rp 2**		125	200			
	R 2			200			
SP 14A	**Rp 2**		125				
SP 17	**Rp 2½**		200	200			
	R 3			200	250		
SP 30	**Rp 3**		200	200	250		
	R 3				250		
SP 46	**Rp 3**		200	200	250		
	Rp 4		200	200	250		
	R 4				250		
SP 60	**Rp 3**		200	200			
	Rp 4		200	200	250		
SP 77	**Rp 5**			250	250		
		5"		250	250		
SP 95	**Rp 5**			250	250		
		5"		250	250		
SP 125	**Rp 6**			280	280		
		6"		280	280		
SP 160	**Rp 6**			280	280		
		6"		280	280		
SP 215	**Rp 6**			355	355	355	355
		6"		355	355		355

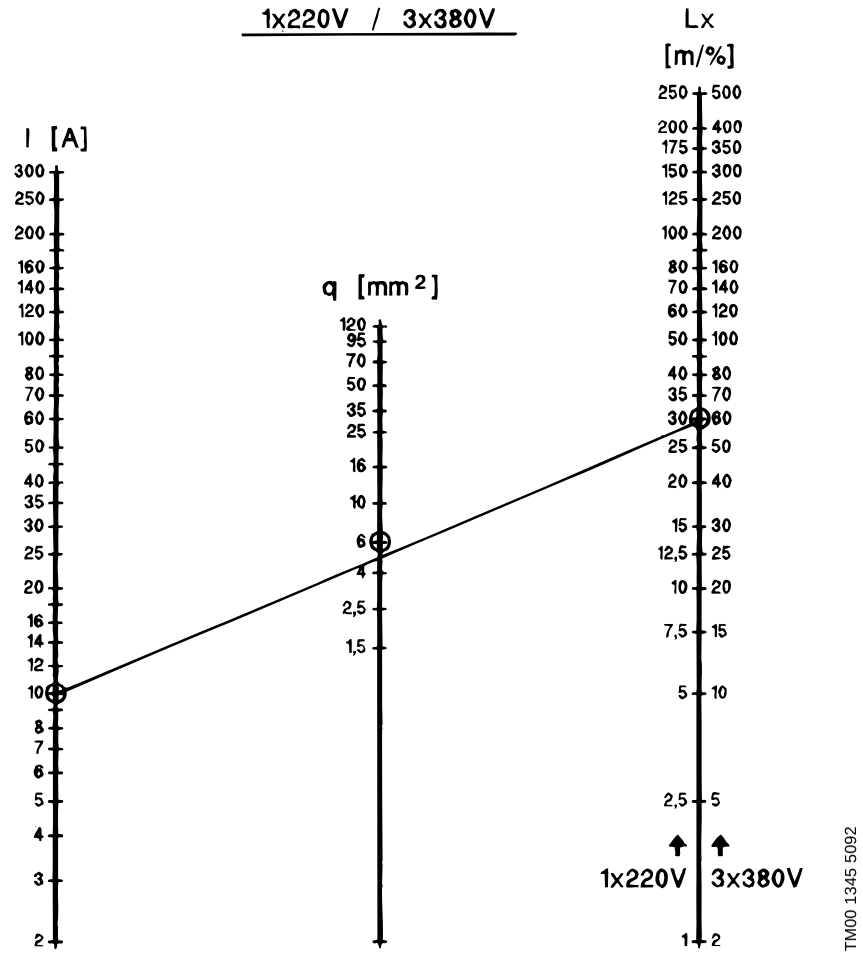

Example:

U =3 x 380 V
I =**10 A**
L =120 m
ΔU =2%

$$Lx = \frac{L}{\Delta U} = \frac{120}{2\%} = \mathbf{60\ m} = q \Rightarrow 6\ mm^2$$

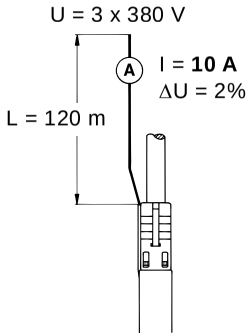

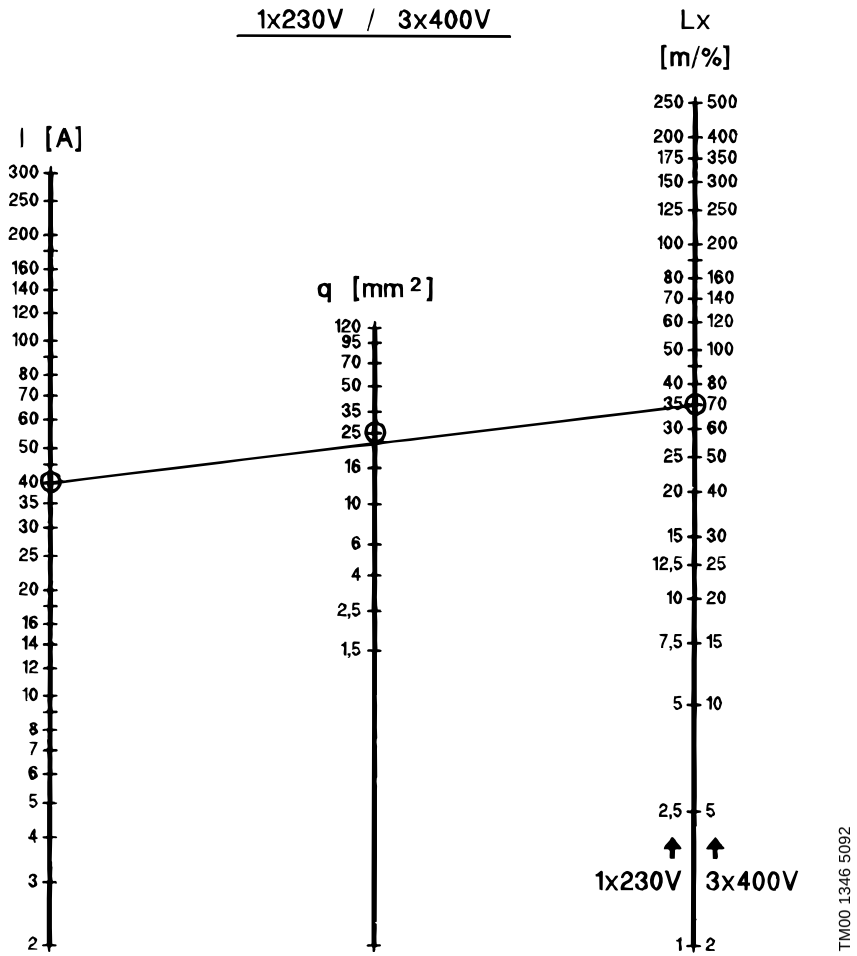

Example:

U =3 x 400 V
I =40 A
L =140 m
ΔU =2%

$$Lx = \frac{L}{\Delta U} = \frac{140}{2\%} = \mathbf{70\ m} = q \Rightarrow 25\ mm^2$$

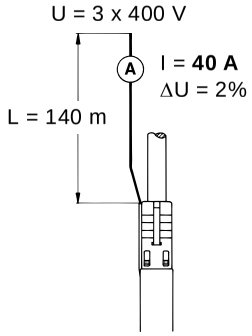

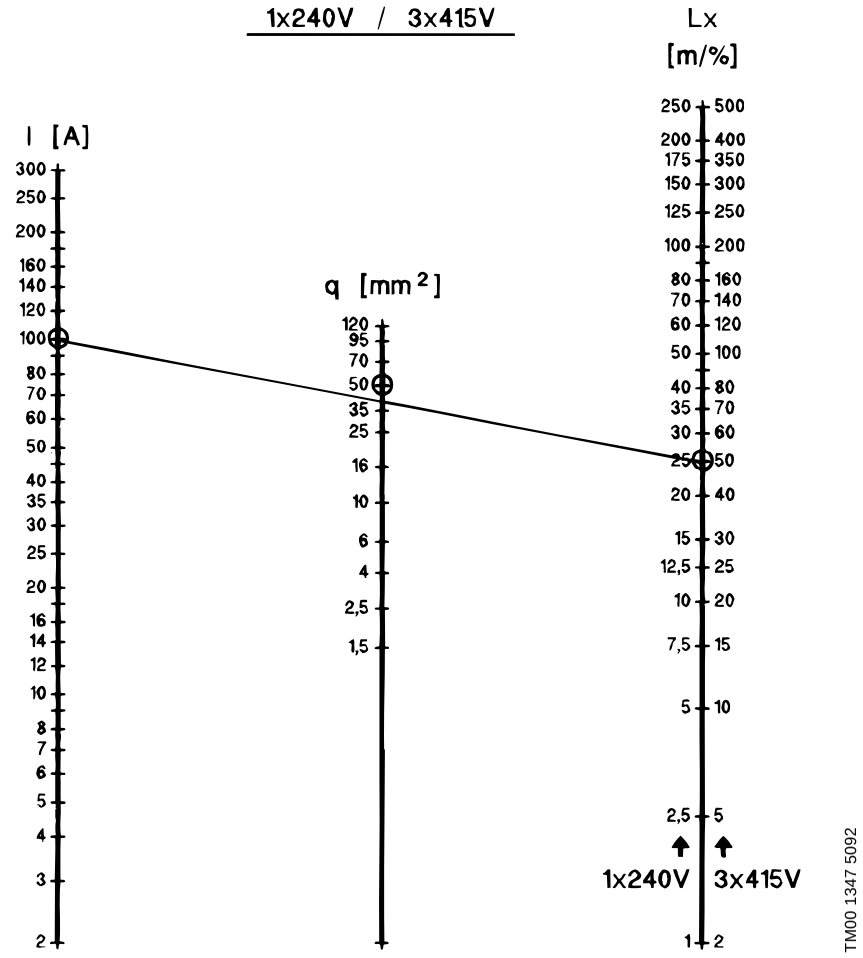

Example:

U =3 x 415 V
I =**100 A**
L =150 m
ΔU =3%

$$Lx = \frac{L}{\Delta U} = \frac{150}{3\%} = \mathbf{50\ m} = q \Rightarrow 50\ mm^2$$

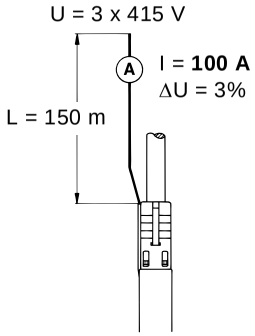

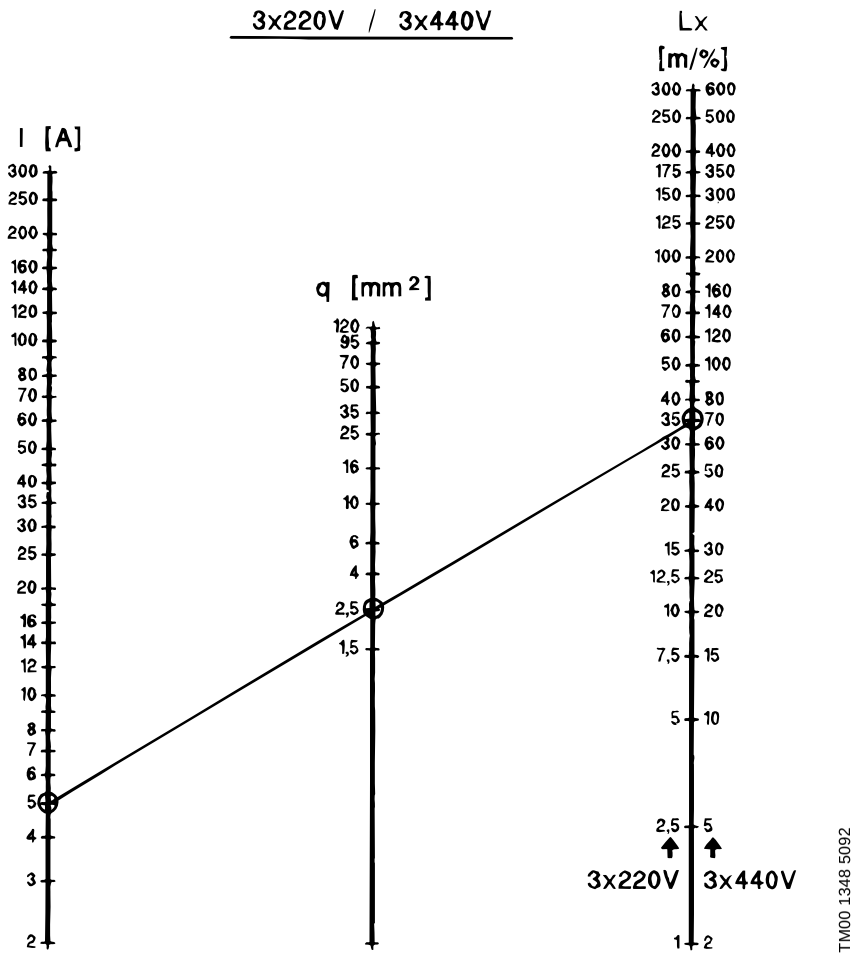

Example:

U =3 x 220 V
I =**5 A**
L =105 m
ΔU =3%

$$Lx = \frac{L}{\Delta U} = \frac{105}{3\%} = \mathbf{35\ m} = q \Rightarrow 2{,}5\ mm^2$$

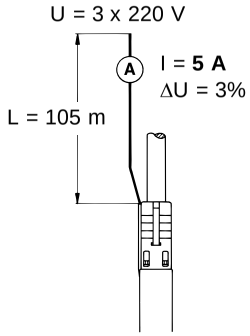

SP A

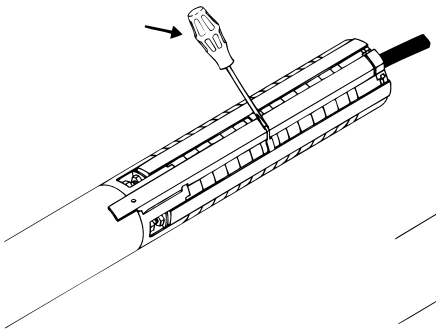

Fig. 1

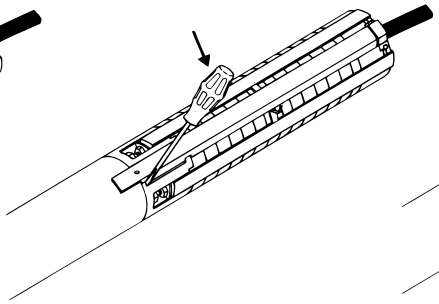

Fig. 2

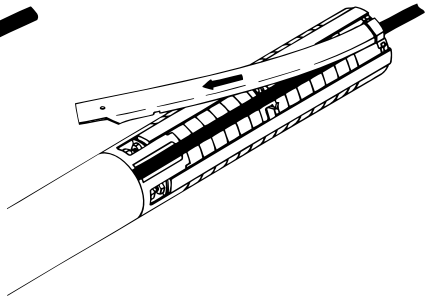

Fig. 3

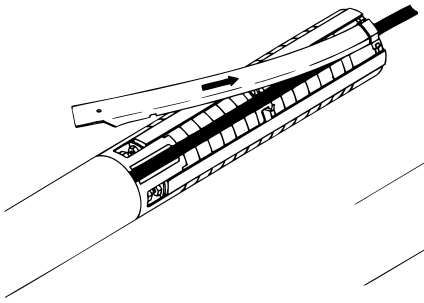

Fig. 1

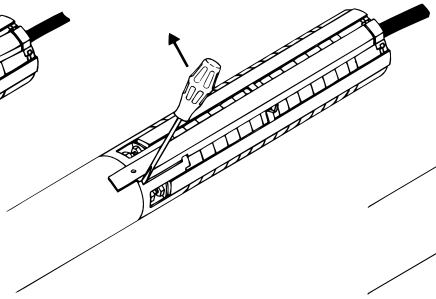

Fig. 2

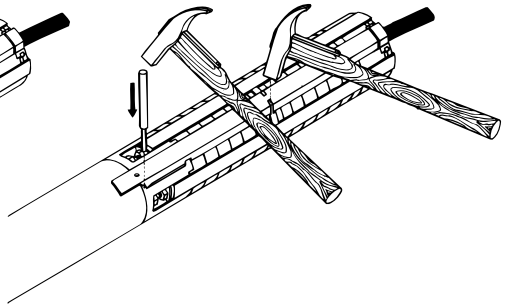

Fig. 3

TM00 1323 5092

SP A

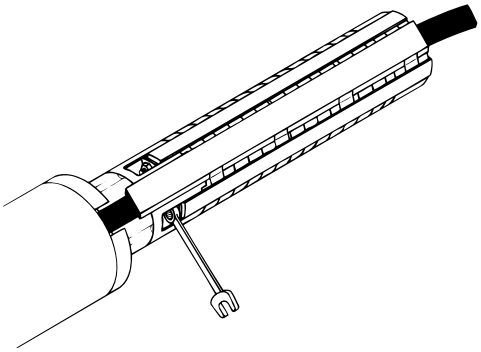

Fig. 1

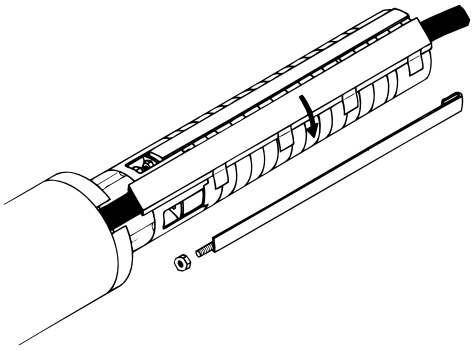

Fig. 2

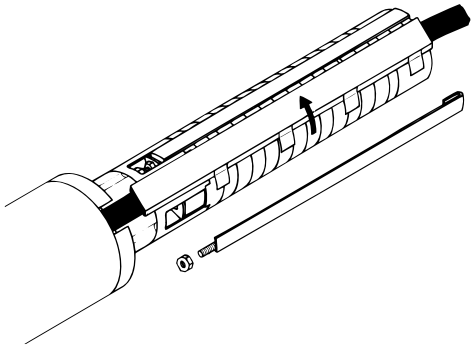

Fig. 1

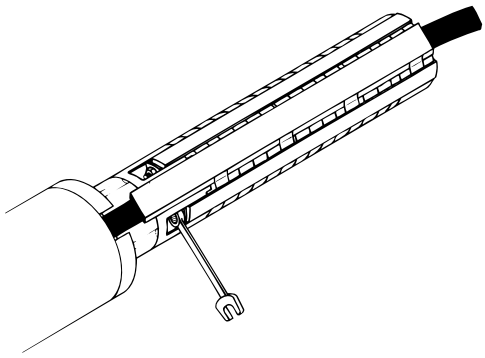

Fig. 2

TM00 1324 5092

SP 17 - SP 30 - SP 46 - SP 60

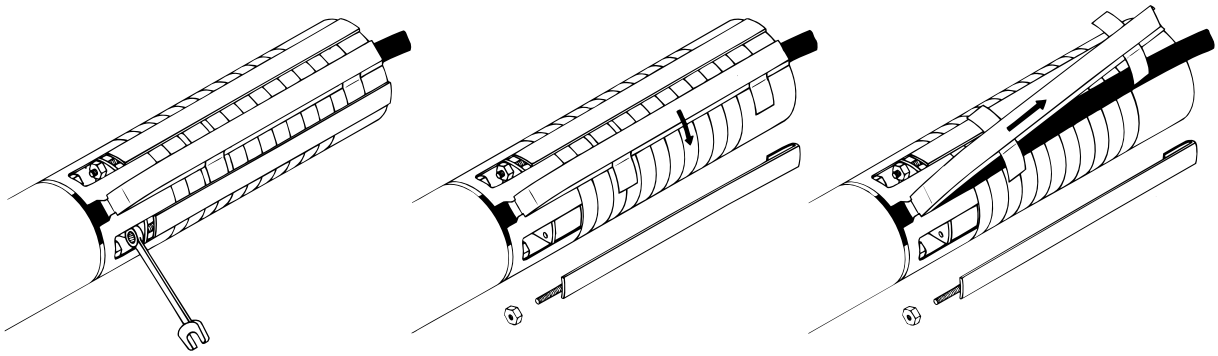

Fig. 1 Fig. 2 Fig. 3

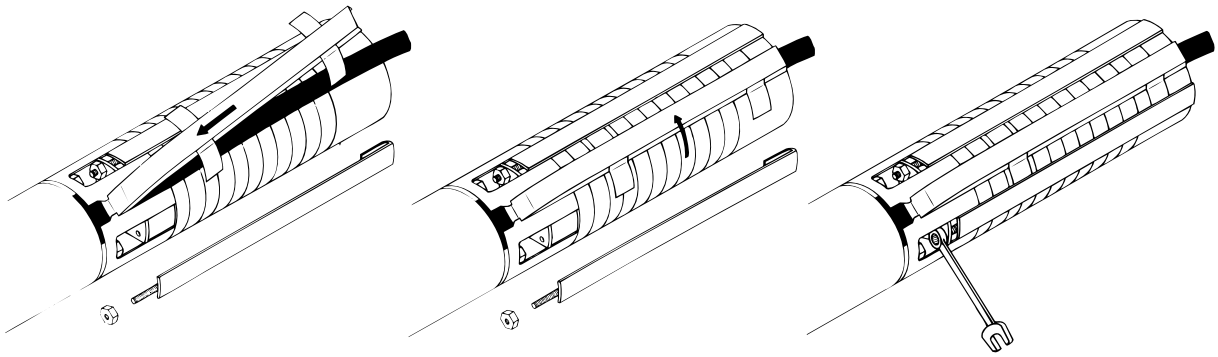

Fig. 1 Fig. 2 Fig. 3

TM00 1325 5092

SP 77 - SP 95 - SP 125 - SP 160 - SP 215

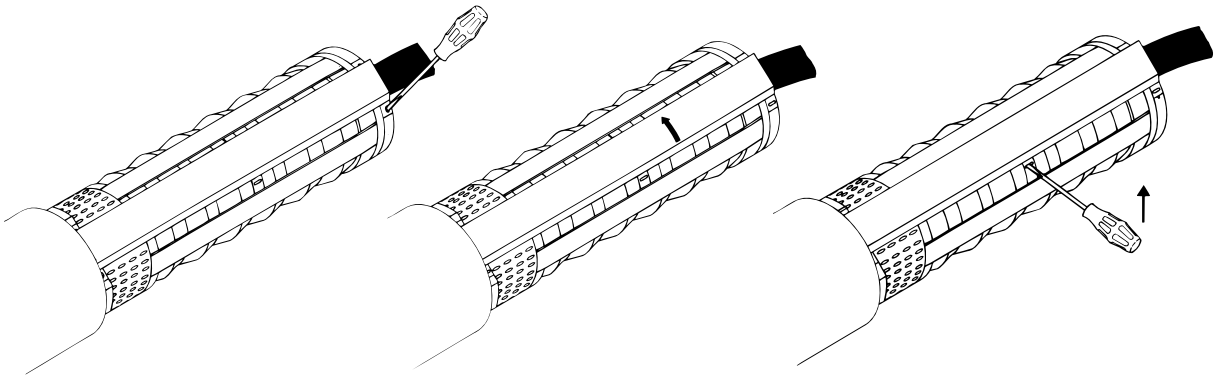

Fig. 1 Fig. 2 Fig. 3

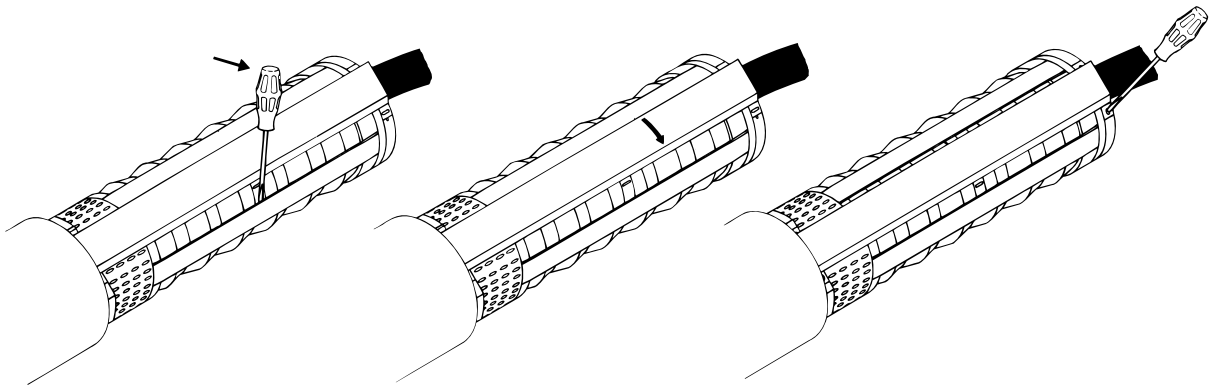

Fig. 1 Fig. 2 Fig. 3

TM00 1326 5092

Denmark
GRUNDFOS DK A/S
Martin Bachs Vej 3
DK-8850 Bjerringbro
Tlf.: +45-87 50 50 50
Telefax: +45-87 50 51 51
E-mail: info_GDK@grundfos.com
www.grundfos.com/DK

Argentina
Bombas GRUNDFOS de Argentina S.A.
Ruta Panamericana km. 37.500 Lote 34A
1619 - Garin
Pcia. de Buenos Aires
Phone: +54-3327 414 444
Telefax: +54-3327 411 111

Australia
GRUNDFOS Pumps Pty. Ltd.
P.O. Box 2040
Regency Park
South Australia 5942
Phone: +61-8-8461-4611
Telefax: +61-8-8340 0155

Austria
GRUNDFOS Pumpen Vertrieb Ges.m.b.H.
Grundfosstraße 2
A-5082 Grödig/Salzburg
Tel.: +43-6246-883-0
Telefax: +43-6246-883-30

Belgium
N.V. GRUNDFOS Bellux S.A.
Boomsesteenweg 81-83
B-2630 Aartselaar
Tél.: +32-3-870 7300
Télécopie: +32-3-870 7301

Belorussia
Представительство ГРУНДФОС в Минске
220090 Минск ул.Олешева 14
Телефон: (8632) 62-40-49
Факс: (8632) 62-40-49

Bosnia/Herzegovina
GRUNDFOS Sarajevo
Paromlinska br. 16,
BiH-71000 Sarajevo
Phone: +387 33 713290
Telefax: +387 33 231795

Brazil
GRUNDFOS do Brasil Ltda.
Rua Tomazina 106
CEP 83325 - 040
Pinhais - PR
Phone: +55-41 668 3555
Telefax: +55-41 668 3554

Bulgaria
GRUNDFOS Pumpen Vertrieb Representative Office - Bulgaria
Bulgaria, 1421 Sofia
Lozenetz District
105-107 Arsenalski blvd.
Phone: +359 2963 3820, 2963 5653
Telefax: +359 2963 1305

Canada
GRUNDFOS Canada Inc.
2941 Brighton Road
Oakville, Ontario
L6H 6C9
Phone: +1-905 829 9533
Telefax: +1-905 829 9512

China
GRUNDFOS Pumps (Shanghai) Co. Ltd.
22 Floor, Xin Hua Lian Building
755-775 Huai Hai Rd, (M)
Shanghai 200020
PRC
Phone: +86-512-67 61 11 80
Telefax: +86-512-67 61 81 67

Croatia
GRUNDFOS predstavništvo Zagreb
Cebini 37, Buzin
HR-10000 Zagreb
Phone: +385 1 6595 400
Telefax: +385 1 6595 499

Czech Republic
GRUNDFOS s.r.o.
Čapkovského 21
779 00 Olomouc
Phone: +420-585-716 111
Telefax: +420-585-716 299

Estonia
GRUNDFOS Pumps Eesti OÜ
Peterburi tee 44
11415 Tallinn
Tel: + 372 606 1690
Fax: + 372 606 1691

Finland
OY GRUNDFOS Pumput AB
Mestarintie 11
Piispankylä
FIN-01730 Vantaa (Helsinki)
Phone: +358-9 878 9150
Telefax: +358-9 878 91550

France
Pompes GRUNDFOS Distribution S.A.
Parc d'Activités de Chesnes
57, rue de Malacombe
F-38290 St. Quentin Fallavier (Lyon)
Tél.: +33-4 74 82 15 15
Télécopie: +33-4 74 94 10 51

Germany
GRUNDFOS GMBH
Schlüterstr. 33
40699 Erkrath
Tel.: +49-(0) 211 929 69-0
Telefax: +49-(0) 211 929 69-3799
e-mail: infoservice@grundfos.de
Service in Deutschland:
e-mail: kundendienst@grundfos.de

Greece
GRUNDFOS Hellas A.E.B.E.
20th km. Athinon-Markopoulou Av.
P.O. Box 71
GR-19002 Peania
Phone: +0030-210-66 83 400
Telefax: +0030-210-66 46 273

Hong Kong
GRUNDFOS Pumps (Hong Kong) Ltd.
Unit 1, Ground floor
Siu Wai Industrial Centre
29-33 Wing Hong Street &
68 King Lam Street, Cheung Sha Wan
Kowloon
Phone: +852-27861706/27861741
Telefax: +852-27858664

Hungary
GRUNDFOS Hungária Kft.
Park u. 8
H-2045 Törökbálint,
Phone: +36-23 511 110
Telefax: +36-23 511 111

India
GRUNDFOS Pumps India Private Limited
118 Old Mahabalipuram Road
Thoraipakkam
Chamiers Road
Chennai 600 096
Phone: +91-44 2496 6800

Indonesia
PT GRUNDFOS Pompa
Jl. Rawa Sumur III, Blok III / CC-1
Kawasan Industri, Pulogadung
Jakarta 13930
Phone: +62-21-460 6909
Telefax: +62-21-460 6910/460 6901

Ireland
GRUNDFOS (Ireland) Ltd.
Unit A, Merrywell Business Park
Ballymount Road Lower
Dublin 12
Phone: +353-1-4089 800
Telefax: +353-1-4089 830

Italy
GRUNDFOS Pompe Italia S.r.l.
Via Gran Sasso 4
I-20060 Truccazzano (Milano)
Tel.: +39-02-95838112
Telefax: +39-02-95309290/95838461

Japan
GRUNDFOS Pumps K.K.
1-2-3, Shin Miyakoda
Hamamatsu City
Shizuoka pref. 431-21
Phone: +81-53-428 4760
Telefax: +81-53-484 1014

Korea
GRUNDFOS Pumps Korea Ltd.
6th Floor, Aju Building 679-5
Yeoksam-dong, Kangnam-ku, 135-916
Seoul, Korea
Phone: +82-2-5317 600
Telefax: +82-2-5633 725

Latvia
SIA GRUNDFOS Pumps Latvia
Deglava biznesa centrs
Augusta Deglava ielā 60, LV-1035, Rīga,
Tālr.: + 371 714 9640, 7 149 641
Fakss: + 371 914 9646

Lithuania
GRUNDFOS Pumps UAB
Smolensko g. 6
LT-03201 Vilnius
Tel: + 370 52 395 430
Fax: + 370 52 395 431

Malaysia
GRUNDFOS Pumps Sdn. Bhd.
7 Jalan Peguam U1/25
Glenmarie Industrial Park
40150 Shah Alam
Selangor
Phone: +60-3-5569 2922
Telefax: +60-3-5569 2866

Mexico
Bombas GRUNDFOS de Mexico S.A. de C.V.
Boulevard TLC No. 15
Parque Industrial Stiva Aeropuerto
Apodaca, N.L. 66600
Mexico
Phone: +52-81-8144 4000
Telefax: +52-81-8144 4010

Netherlands
GRUNDFOS Nederland B.V.
Postbus 104
NL-1380 AC Weesp
Tel.: +31-294-492 211
Telefax: +31-294-492244/492299

New Zealand
GRUNDFOS Pumps NZ Ltd.
17 Beatrice Tinsley Crescent
North Harbour Industrial Estate
Albany, Auckland
Phone: +64-9-415 3240
Telefax: +64-9-415 3250

Norway
GRUNDFOS Pumper A/S
Strømsveien 344
Postboks 235, Leirdal
N-1011 Oslo
Tlf.: +47-22 90 47 00
Telefax: +47-22 32 21 50

Poland
GRUNDFOS Pompy Sp. z o.o.
ul. Klonowa 23
Baranowo k. Poznania
PL-62-081 Przeźmierowo
Phone: (+48-61) 650 13 00
Telefax: (+48-61) 650 13 50

Portugal
Bombas GRUNDFOS Portugal, S.A.
Rua Calvet de Magalhães, 241
Apartado 1079
P-2770-153 Paço de Arcos
Tel.: +351-21-440 76 00
Telefax: +351-21-440 76 90

România
GRUNDFOS Pompe România SRL
Bd. Biruintei, nr 103
Pantelimon county Ilfov
Phone: +40 21 200 4100
Telefax: +40 21 200 4101
E-mail: romania@grundfos.ro

Russia
ООО Грундфос
Россия, 109544 Москва, Школьная 39
Тел. (+7) 095 737 30 00, 564 88 00
Факс (+7) 095 737 75 36, 564 88 11
E-mail
grundfos.moscow@grundfos.com

Serbia and Montenegro
GRUNDFOS Predstavništvo Beograd
Dr. Milutina Ivkovića 2a/29
YU-11000 Beograd
Phone: +381 11 26 47 877, 11 26 47 496
Telefax: +381 11 26 48 340

Singapore
GRUNDFOS (Singapore) Pte. Ltd.
24 Tuas West Road
Jurong Town
Singapore 638381
Phone: +65-6865 1222
Telefax: +65-6861 8402

Slovenia
GRUNDFOS PUMPEN VERTRIEB Ges.m.b.H.,
Podružnica Ljubljana
Blatnica 1, SI-1236 Trzin
Phone: +386 1 563 5338
Telefax: +386 1 563 2098
E-mail: slovenia@grundfos.si

Spain
Bombas GRUNDFOS España S.A.
Camino de la Fuentecilla, s/n
E-28110 Algete (Madrid)
Tel.: +34-91-848 8800
Telefax: +34-91-628 0465

Sweden
GRUNDFOS AB
Lunnagårdsgatan 6
431 90 Mölndal
Tel.: +46-0771-32 23 00
Telefax: +46-31 331 94 60

Switzerland
GRUNDFOS Pumpen AG
Bruggacherstrasse 10
CH-8117 Fällanden/ZH
Tel.: +41-1-806 8111
Telefax: +41-1-806 8115

Taiwan
GRUNDFOS Pumps (Taiwan) Ltd.
7 Floor, 219 Min-Chuan Road
Taichung, Taiwan, R.O.C.
Phone: +886-4-2305 0868
Telefax: +886-4-2305 0878

Thailand
GRUNDFOS (Thailand) Ltd.
947/168 Moo 12, Bangna-Trad Rd., K.M. 3,
Bangna, Phrakanong
Bangkok 10260
Phone: +66-2-744 1785 ... 91
Telefax: +66-2-744 1775 ... 6

Turkey
GRUNDFOS POMPA San. ve Tic. Ltd. Sti.
Gebze Organize Sanayi Bölgesi
Ihsan dede Caddesi,
2. yol 200. Sokak No. 204
41490 Gebze/ Kocaeli
Phone: +90 - 262-679 7979
Telefax: +90 - 262-679 7905
E-mail: satis@grundfos.com

Ukraine
ТОВ ГРУНДФОС Украина
ул. Владимирская, 71, оф. 45
г. Киев, 01033, Украина,
Тел. +380 44 289 4050
Факс +380 44 289 4139

United Arab Emirates
GRUNDFOS Gulf Distribution
P.O. Box 16768
Jebel Ali Free Zone
Dubai
Phone: +971-4- 8815 166
Telefax: +971-4-8815 136

United Kingdom
GRUNDFOS Pumps Ltd.
Grovebury Road
Leighton Buzzard/Beds. LU7 8TL
Phone: +44-1525-850000
Telefax: +44-1525-850011

U.S.A.
GRUNDFOS Pumps Corporation
17100 West 118th Terrace
Olathe, Kansas 66061
Phone: +1-913-227-3400
Telefax: +1-913-227-3500

Usbekistan
Представительство ГРУНДФОС в Ташкенте
700000 Ташкент ул.Усмана Носира 1-й
тупик 5
Телефон: (3712) 55-68-15
Факс: (3712) 53-36-35

Addresses revised 30.06.2006

080080 0706	**30**
Repl. 080080 0506	

2. PRÉ-TRATAMENTO - FILTROS MULTIMEIOS E DE CARTUCHO

MULTIMEDIA FILTERS

STEEL VESSELS

MODEL	MAXIMUM FLOW (GPM)	MAX PRESS (PSIG)	FLG. INLET/ OUTLET (IN)	DIAMETER / HEIGHT (IN)	SHIPPING WEIGHT (w/ media) FILTER PACK A	SHIPPING WEIGHT (w/ media) FILTER PACK B	SHPPING WEIGHT (w/ media) FILTER PACK C	SHIPPING WEIGHT (w/ media) FILTER PACK D
C-35	60	30	2 / 2	38 / 83	2820	2770	2570	2380
C-50	90	30	3 / 3	46 / 96	4140	4380	4290	4340
C-75	140	30	3 / 4	57 / 98	6320	6580	6470	6430
C-100	200	30	3 / 4	68 / 102	8790	9100	8890	8990
C-200	310	30	4 / 6	85 / 118	13910	14520	14360	14420
C-500S	400	50	6 / 6	96 / 113	19200	20190	18700	19635

FILTER PACK:

A) Contains gravel and sand.
B) Contains gravel, garnet, and sand.
C) Contains gravel sand, and anthracite.
D) Contains gravel, garnet, sand, and anthracite.

The CANSORB Series Modular Filters are fabricated of carbon steel and provided with a high solids epoxy lining. Where process conditions dictate, the vessels can be fabricated from other materials such as stainless steel. In addition, a different lining can be substituted for the high solids epoxy. A drain line is provided with a ball valve. The liquid collection system is designed to promote even flow distribution and thus, efficient filtration and backwashing. The liquid outlet is designed to maintain a liquid level above the media bed. The manway is 18 inches in diameter for easy access and media filling and removal. The vessels are provided with lifting lugs and fork channels. A combination rupture disc-vent assembly is available. *Specifications and properties are subject to change without notice.*

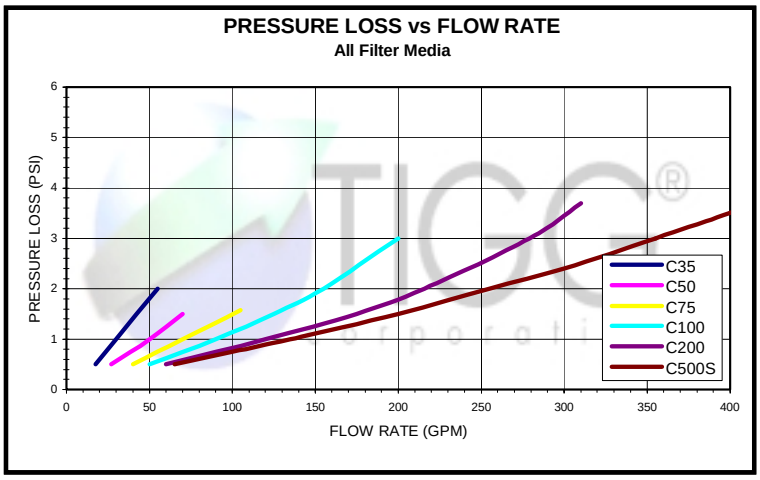

C-200 ILLUSTRATION

TIGG corporation

800 Old Pond Rd., Suite 706
Bridgeville, PA 15017
(412) 257-9580 phone
(412) 257-8520 fax
www.tigg.com
info@tigg.com

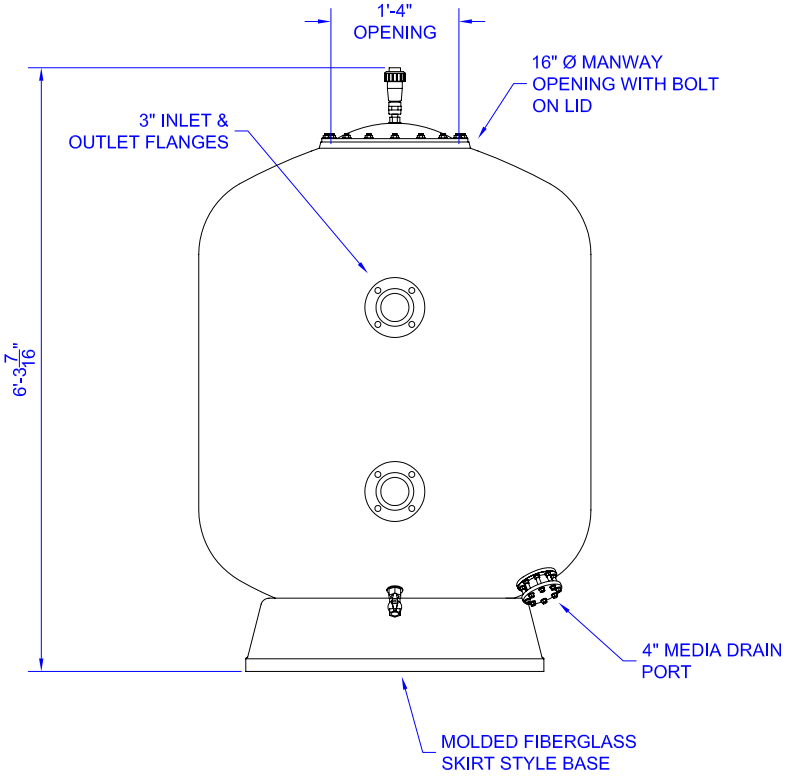

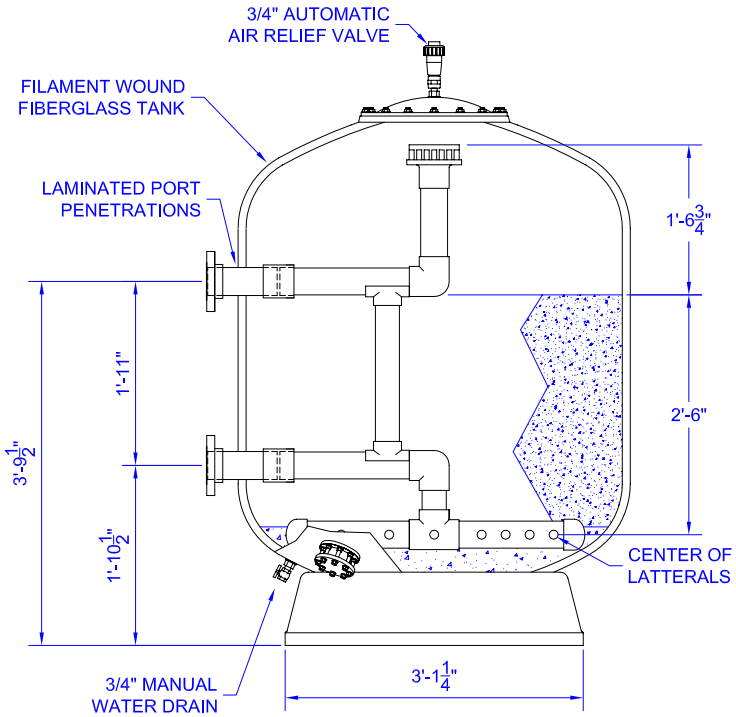

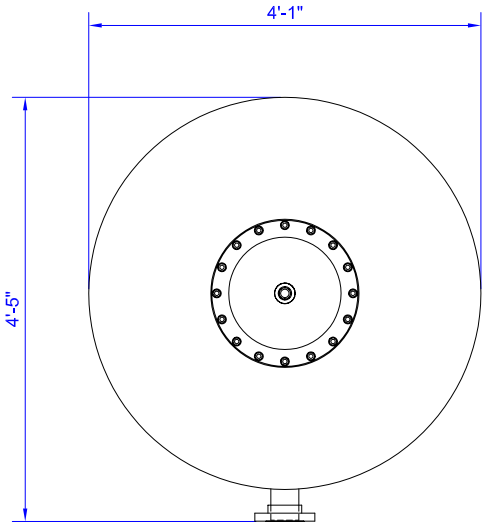

APPROVAL REQUIRED	
AS DRAWN	☐
AS NOTED	☐
NOT APPROVED:	☐
APPROVED BY: _____	
DATE: _____	

FILTER DATA	
TOTAL SURFACE AREA:	12.16 SQ. FT.
MAX WORKING PRESSURE:	100 PSI.
MAX FLOW RATE:	243 GPM.
STANDARD MEDIA LOAD	
SAND	30.5 CU. FT.
GRAVEL	7 CU. FT.
TECHNICAL INFORMATION	
TANK VOLUME (GAL)	396 GAL
MEDIA DEPTH	30"
WEIGHTS	
FILTER SHIPPING WEIGHT	**605 LBS DRY**
FILTER OPERATING WEIGHT:	**6,160 LBS ****

GENERAL NOTES:
1. MEDIA NOT INCLUDED WITH FILTER
2. CONCRETE SLAB TO BE DESIGNED BY OTHERS
3. FILTER MADE FROM HIGH STRENGTH FIBERGLASS AND RESINS
4. FILTERS HAVE UV STABILIZED CLEAR COAT
5. ALL INTERNAL COMPONENTS ARE CONSTRUCTED OF SCHEDULE 80 PVC OR EQUAL.
6. DIMENSIONS ± 1/4"

ASTRAL
USA

VERTICAL FILTER TANK (1347-3)
47" WITH 3" CONNECTIONS 100 PSI

DRAWN BY: MM	DWG. NO: 1347-3	REV: A
SCALE: 1/2" = 1'	DATE: 1/20/04	CHECKED: KW

EDEN EQUIPMENT COMPANY

PRECISION ENGINEERED FILTRATION SYSTEMS FOR THE GLOBAL MARKET

EFCT HOUSING SERIES

EXCEL®

THE EDEN DIFFERENCE

Eden Equipment Company, manufacturer of patented and highly engineered filtration systems, is committed to meeting the global demand for cost effective filtration solutions.

With a focus on durability and reliability, our products minimize downtime through an easy to maintain design. Replacement costs are reduced by outlasting most competitors.

Our housings are 3 to 5 times stronger than comparable steel vessels at 50% of the weight and are compatible with most filter cartridges. The life of our housings, even in highly corrosive environments, has exceeded 20 years.

EFCT HOUSING DESCRIPTION

The Eden Excel patented line of vessels and filtration systems provide exceptional chemical resistance and outstanding tensile strength.

- EFCT housings are constructed from a fiber-glass reinforced plastic (FRP) barrel manufactured with Dow Derakane 411, a flexible and fatigue-resistant vinyl ester resin
- Seamless construction adds strength and longevity
- Engineered to minimize downtime; easy to clean and replace parts
- Internal Components are constructed of PVC. CPVC also available
- Externals are constructed of anodized aluminum & 303 stainless steel with other materials optional
- Buna O-rings are standard

FEATURES

- Designed to ASME Code, Section X standards
- All wetted materials meet the FDA CFR Title 21 requirements
- Pressure Rating - Maximum use pressure rated 150 PSI at 150° F
- Hydrostatically pressure tested to 300 PSI, design pressure of 900 PSI
- Corrosion resistant - compatible with fluids in PH range of 2-13
- Standard 4" socket inlet/outlet
- Standard 1/4" NPT vent

FLOW RATES

The following flow rates are suggested for standard use, though significantly higher rates may be obtained with corresponding pressure drop.

EFCT Product	GPM	Cartridge Size	# of Cartridges
44EFCT2-4C150	to 220 GPM	20 inch	22
66EFCT3-4C150	to 330 GPM	30 inch	22
88EFCT4-4C150	to 440 GPM	40 inch	22
110EFCT5-4C150	to 550 GPM	50 inch	22

OPTIONS

- All vessels are highly customizable for the widest availability
- 222 Cartridge Seal Internals
- 2", 3", 4" or 6" flange sets in PVC or CPVC
- EPDM, Viton, Silicon, Kalrez O-Rings available
- BPO bleach service

Eden Equipment Company, Inc. 1485 East 3rd Street, Pomona, CA 91766
t. 800.842.5081 f. 909.629.0243 www.edenequipment.com

Contact us for special designs, ratings or compatibility. Chemical compatibility must be checked to ensure warranty.

EDEN EQUIPMENT COMPANY

PRECISION ENGINEERED FILTRATION SYSTEMS FOR THE GLOBAL MARKET

XL2 POLYPRO CARTRIDGE FILTER

EXCEL®

THE EDEN DIFFERENCE

Eden Equipment Company, manufacturer of patented and highly engineered filtration systems, is committed to meeting the global demand for cost effective filtration solutions.

Eden Excel® has engineered new cartridge filters that provide maximum filtration capacity, economy and longer service than other filters.

XL2 POLYPRO CARTRIDGE FILTER

The Eden Excel® XL2 series Premium Polypropylene pleated cartridge filter has been specifically designed as a precision filter unit that can be used in applications between those absolute membrane filters and those requiring gross particle removal.

The cartridges are manufactured of 100% polypropylene providing chemical compatibility with a wide range of chemicals, high temperature resistance, and minimum pressure drop for long life and dependability in process applications.

Serial layers of filter media, each more retententive than the previous layer comprise the filter. This layering of media provides an exceptionally high surface area with an increase in service life and retentative properties.

The cartridges are manufactured to comply with industry-accepted dimensions and are available in both single and double open-end configurations.

CONSTRUCTION

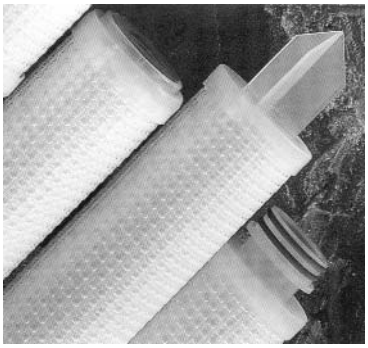

- Inner polyproylene core for compressive strength
- Inner layer of polypropylene providing a 10 micron nominal final filter and final filter support
- Outer filtration layer of polypropylene that provides filtration without media migration and binders to break down or leach out
- Outer polypropylene cage for surface integrity and appearance
- Molded polyproylene end-caps thermally bonded to filter matrix
- Gaskets/O-rings - Silicone (Standard)
- EPR, Viton, and Buna-N gaskets also available

SPECIFICATIONS

Dimensions:
2.77" Outside Diameter
1" Core Diameter

Nominal Lengths:
10, 20, 30, 40 inches

Effective Filtration Area:
10 inches - 5 square feet
20 inches - 11 square feet
30 inches - 16 square feet
40 inches - 22 square feet

Micron Ratings:
10.0, 5.0, 3.0, 1.0, 0.8, 0.6, 0.4, 0.2, 0.1

Cartridge Configurations:
DOE Flat Gasket Standard Seal, Excel® Code 1
Internal -020 O-ring Seal, Excel® Code 2
External -222 O-ring Seal, Excel® Code 3
External -222 O-ring Seal, Bayonet Base, Excel® Code 4
External -226 O-ring Seal, Excel® Code 5
External -226 O-ring Seal, Bayonet Base, Excel® Code 6

Eden Equipment Company, Inc. 1485 East 3rd Street, Pomona, CA 91766
t. 800.842.5081 f. 909.629.0243 www.edenequipment.com

Contact us for special designs, ratings or compatibility. Chemical compatibility must be checked to ensure warranty.

XL2 POLYPRO CARTRIDGE FILTER

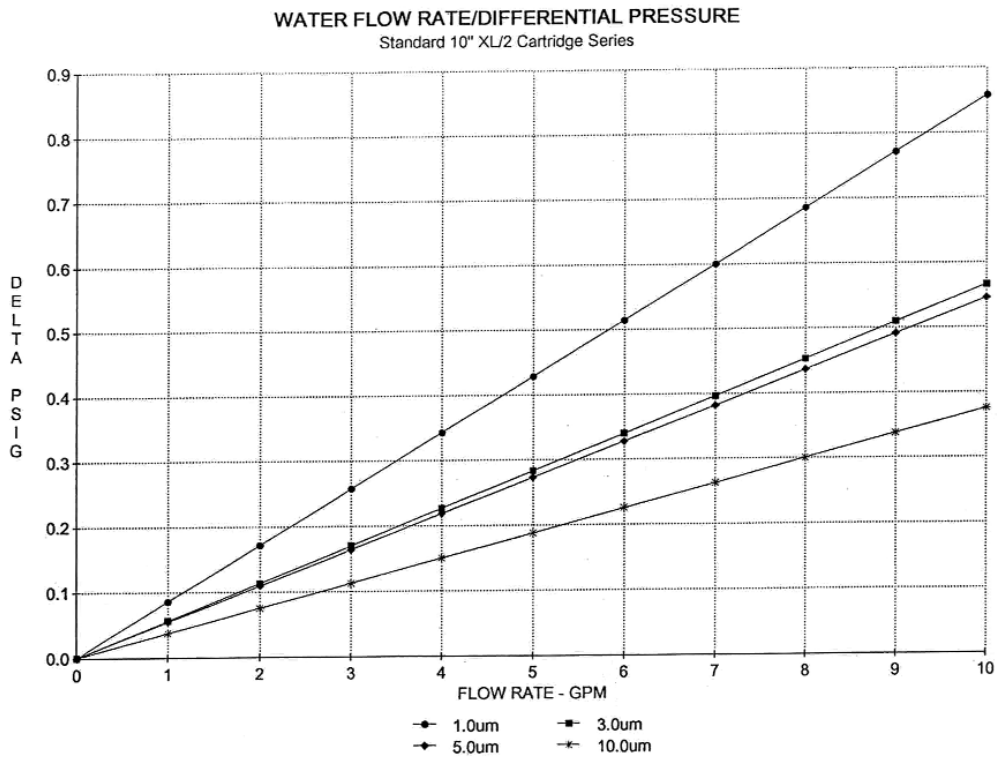

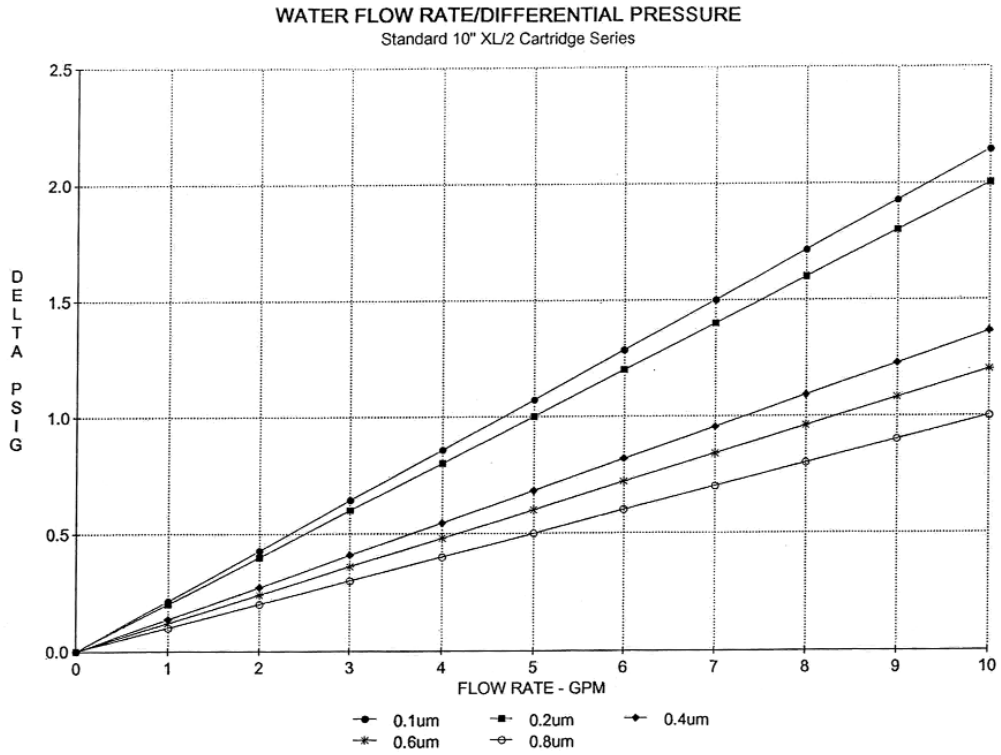

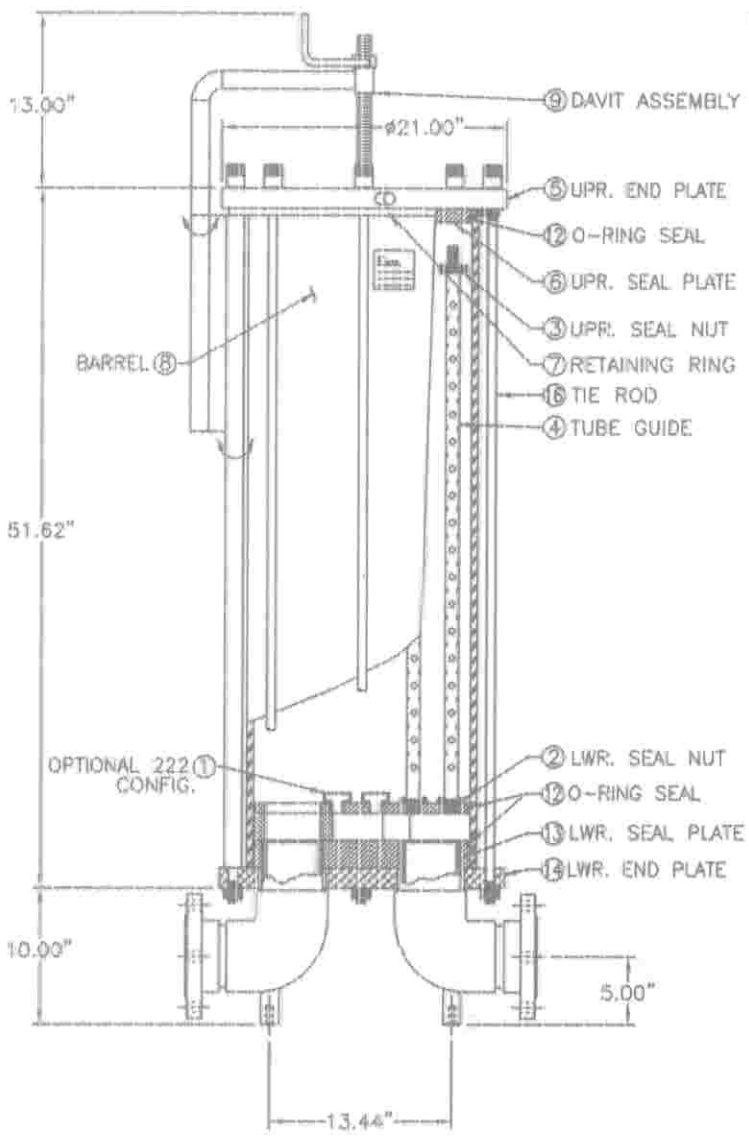

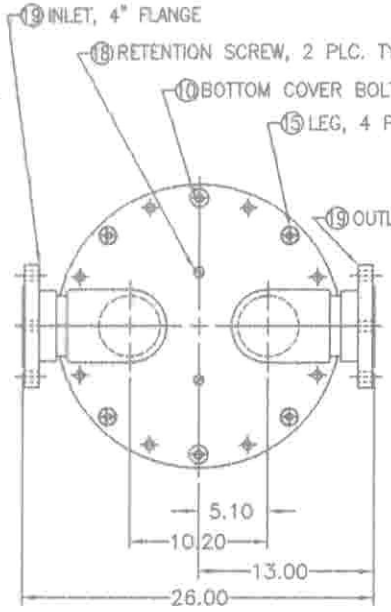

BOTTOM VIEW

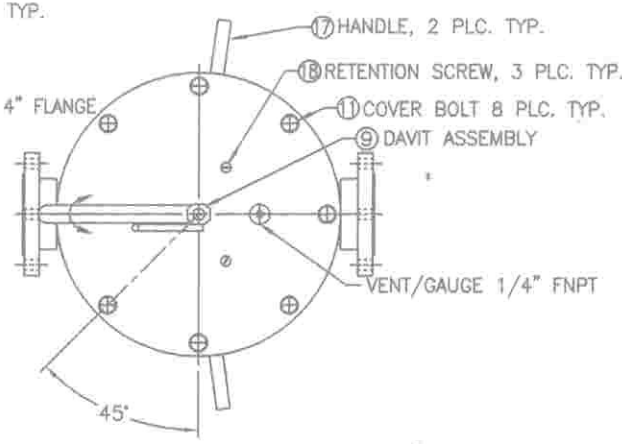

TOP VIEW

ITEM	QTY	PART No.	DESCRIPTION	MATERIAL
19	1	22015-14	4" FLANGE	PVC
18	5	2201516	RETENTION SCREW	303 S.S.
17	2	220151415	HANDLE	303 S.S.
16	8	22015788	TIE ROD	303 S.S.
15	4	220159	LEG	303 S.S.
14	1	220154	LOWER END PLATE	AL
13	1	220155	LOWER SEAL PLATE	PVC
12	3	220150B	O-RING	BUNA
11	8	220158	COVER BOLT	303 S.S.
10	4	220158-1	BOTTOM COVER BOLT	303 S.S.
9	1	2201522	DAVIT	CARBON STEEL
8	1	22015688	BARREL	EFRP
7	1	220153	RETAINING RING	AL
6	1	220152	UPPER SEAL PLATE	PVC
5	1	220151	UPPER END PLATE	AL
4	22	22015088	TUBE GUIDE	PVC
3	22	2201511	UPPER CARTRIDGE SEAL NUT	PVC
2	22	2201531	LOWER CARTRIDGE SEAL NUT	PVC
1	1	22015-21	222 CARTRIDGE SEAL INTERNALS	PVC

THIS IS A CERTIFIED DRAWING OF THE EXCEL, DIVISION OF EDEN EQUIPMENT CO. INC.

SIGNED, TITLE

DATED:

CUSTOMER APPROVAL,

SIGNED, TITLE

DATED:

EXCEL COMPANY CONFIDENTIAL

MATERIAL SPEC. PVC	EDEN EQUIPMENT CO., INC.		
	SCALE N/A	APPROVED BY	DRAWN BY PF
	DATE 062698		REVISION A
UNLESS OTHERWISE SPECIFIED TOL : ± 1/16"	EFCT SERIES		
PART NUMBER 88EFCT4-4FC150	TEL: (909) 629-5106 FAX: (909) 629-0243		DRAWING NUMBER 88EFCT_D

High Flow Filter Systems

for liquid processing environments

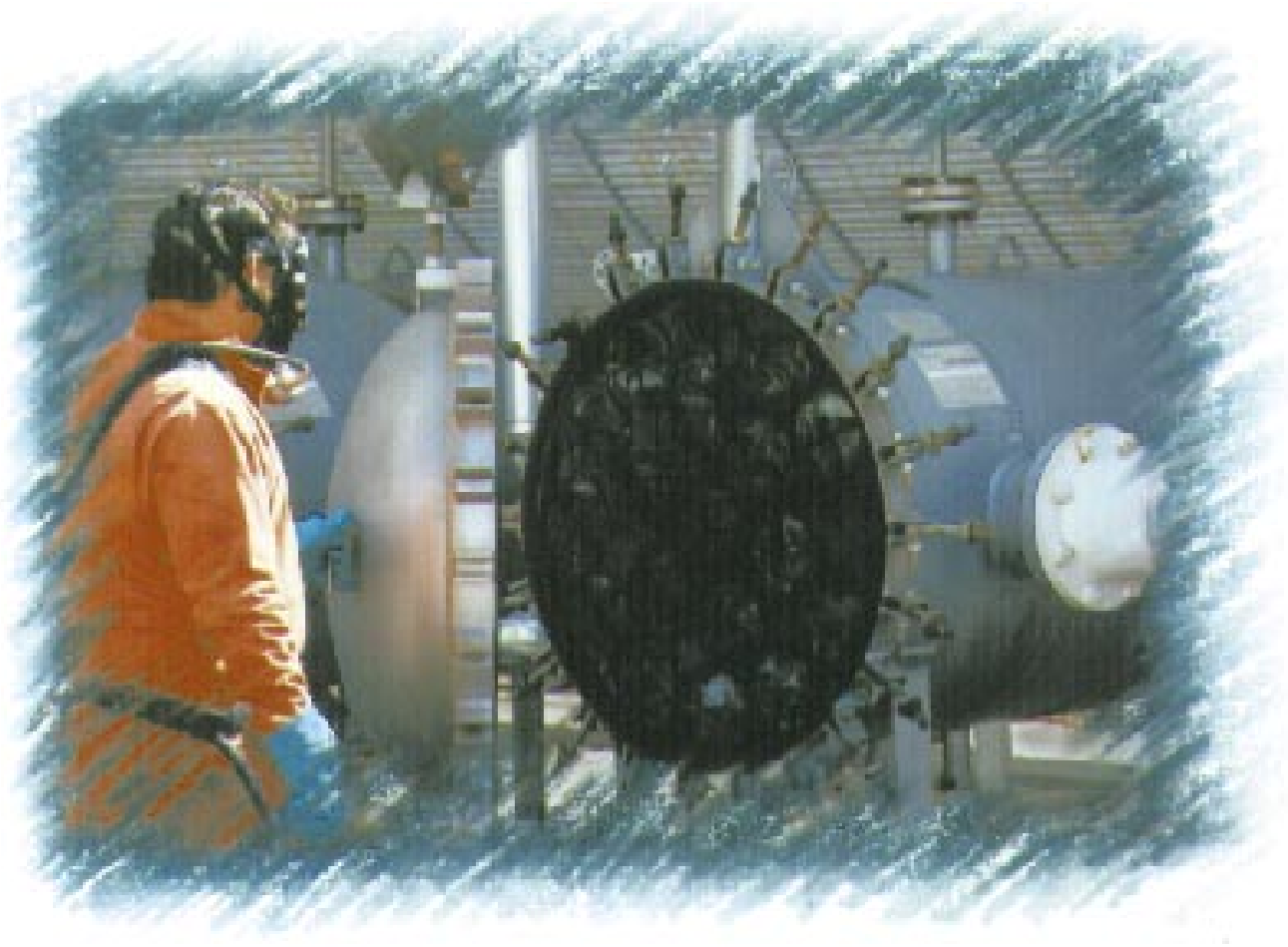

Better… Faster… Cheaper…

3M™ High Flow Filter Cartridges and Vessels

Competition has never been keener. The pressure to increase productivity has never been greater. At 3M, we are committed to developing filtration products to address these facts of industrial life.

The 3M™ High Flow Filtration System has been designed to provide you with a high performance filtering tool, that is easy to use, is inexpensive to operate and can increase your productivity compared to conventional filtration systems.

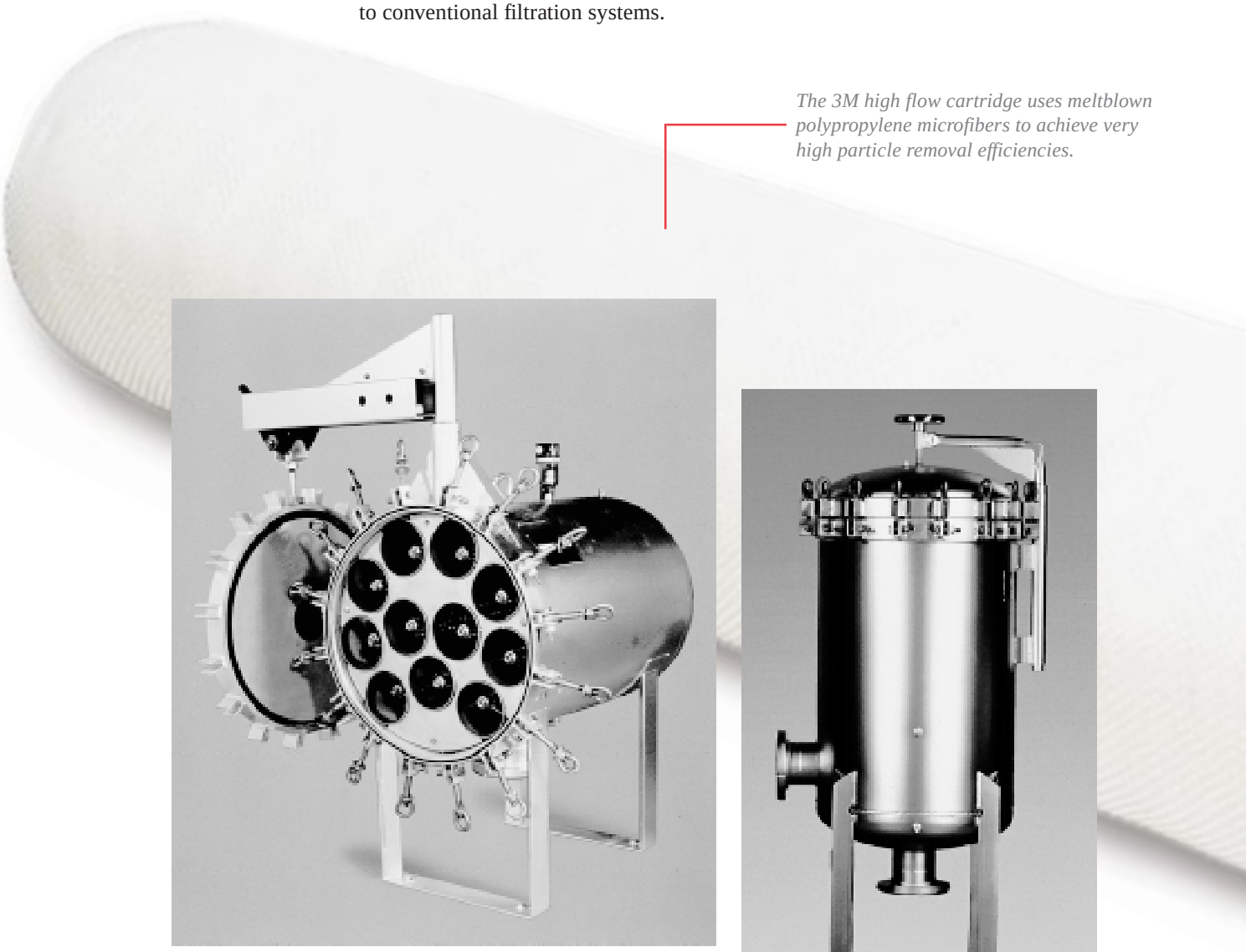

The 3M high flow cartridge uses meltblown polypropylene microfibers to achieve very high particle removal efficiencies.

The 3M high flow vessels are available in horizontal and vertical configurations. Pictured above is a standard horizontal vessel designed to hold 11 3M high flow filter cartridges. The horizontal configuration maximizes ease of operation.

The 3M high flow vessel in the vertical configuration can contain a great amount of filter surface area, but requires very little floor space.

High Performance Filter Media and Patented Design

The 3M high flow filter system uses filter cartridges with a patented pleating design, that results in much higher filtering surface area in a given space than typical cartridge systems.

Each 3M high flow filter cartridge contains up to 200 square feet of high performance media in an easy to handle cartridge construction measuring 7 inches in diameter and 40 inches long.

This large amount of surface area results in excellent throughput and dirt holding capacities. Each cartridge can typically hold up to 20 pounds of dirt before reaching the recommended change-out pressure.

The filter media is made to tightly controlled fiber diameter specifications to produce precise micron retention ratings. This results in consistent particle retention and high quality filtration time after time.

The radial pleat packs up to 200 square feet of filter media in each cartridge.

The redundant O-rings provide a high performance seal that insure no by-pass. The O-rings are available in five different materials for broad chemical compatibility.

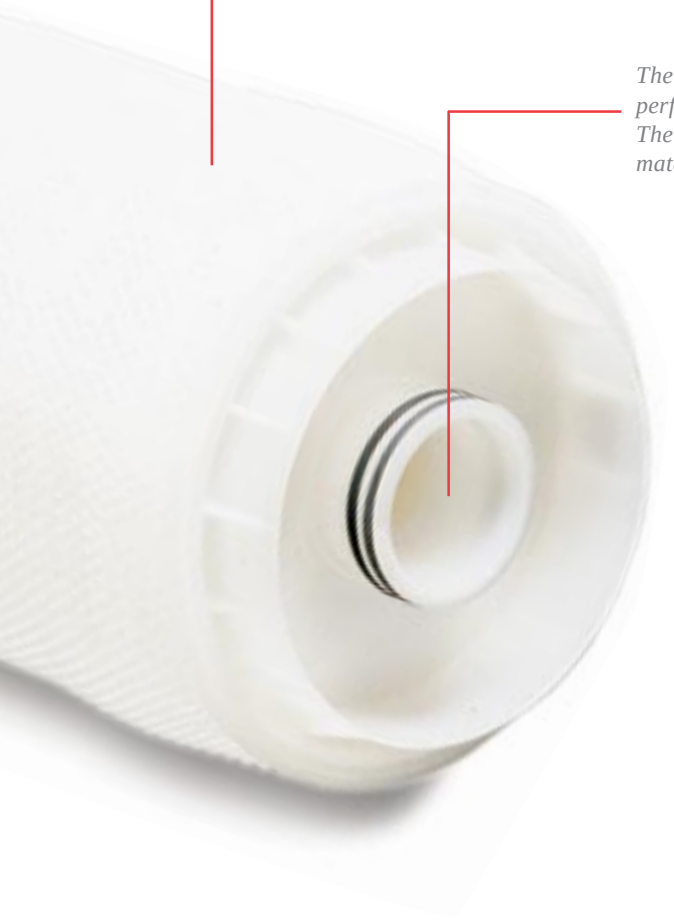

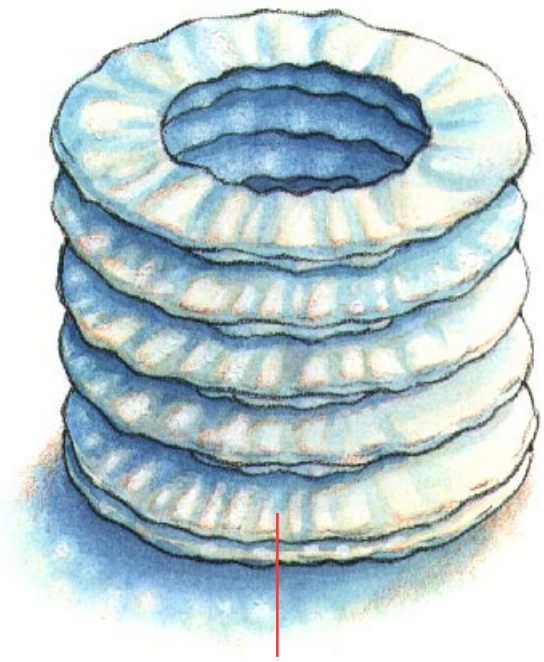

The patented radial pleat design allows greater packing of usable filter media into each cartridge.

Quick and Easy Operation

Easy to operate. There are no springs or attachments to worry about on the 3M™ High Flow Filtration System. Proper cartridge alignment is virtually automatic. The system has been designed so that one operator can quickly install or remove the entire set of cartridges quickly and easily.

The vessels come in both vertical and horizontal configurations. A custom made endcap has been designed to facilitate fast and easy insertion and removal. Cartridges are simply inserted over a built-in guide tube. The 226 O-ring end slides snugly into a receptacle cup at the back end of the vessel. Lid closure takes very little effort, and has been designed to further insure that the cartridges are seated correctly into the receptacle end. Large, easy to handle eye-bolts complete the installation.

Changing cartridges is a quick and easy operation that can be handled by a single operator.

Lower Overall Costs

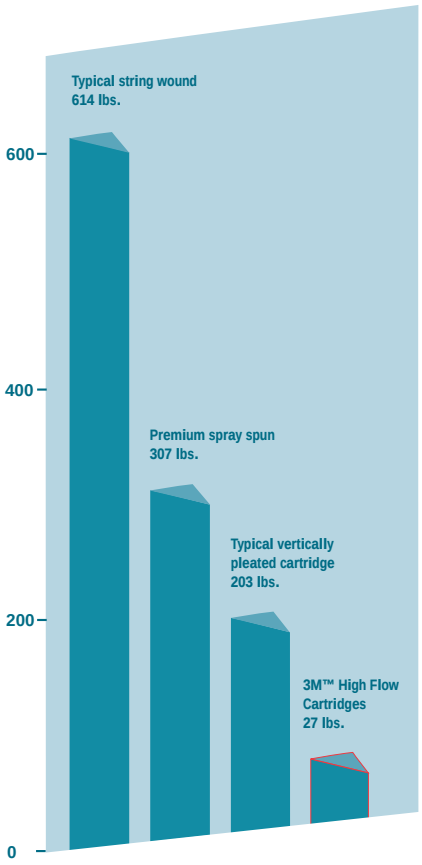

This graph shows the weight of cartridges required to remove 100 pounds of dirt. Less weight means lower disposal costs.

High performance filtration. Extremely high dirt holding capacity. Quick and easy filter change-outs. Higher volume throughput in a given space. All of these features result in a filter system with very low operating costs and excellent filter economy.

Consider the following:

- **Lower cartridge costs -** Because of the great amount of filtering surface area and the very high dirt holding capacity of the system, yearly purchases of filter cartridges may be greatly reduced.
- **Lower labor costs -** Higher dirt holding capacity means longer filter life and fewer filter change-outs. Easy-to-use design means change-outs can be done faster and with fewer operators than other conventional filter cartridge systems.
- **Lower disposal costs -** Unique cartridge design leads to far less disposal volumes than conventional systems.
- **Space efficiency -** High flow rate design results in less system unit floor space needed per gallon of liquid filtered.
- **Lower energy costs -** The 3M high flow filter system can get your filtering jobs done in less time than conventional systems, reducing pump operating costs.

Number of Cartridges	Vessel Diameter (inches)	Total Flow Recommended (gpm)	Total Filtering Surface Area (sq. ft.)	Total Dirt Holding Capacity (lbs.)
1	8	40	200	22
2	8 ea.	80	400	44
4	18	160	800	88
5	20	200	1000	110
7	24	280	1400	154
11	30	440	2200	242
18	36	720	3600	396
21	42	840	4200	462
29	48	1160	5800	638

The specially designed 3M™ High Flow Vessels are available in standard sizes to hold up to 29 cartridges. The chart above displays typical flow rates and dirt-holding capacities of the system.

Comparing the 3M™ High Flow Filter System Against Conventional Cartridge Systems

3M™ High Flow Filter System *Competition*

Comparison Facts

	Filter Cartridges		
Comparative Measure	3M™ High Flow Filter System	String Wound	Pleated
Typical number of cartridges to handle 550 gpm	**11 each x 40 in. length**	**54 each x 40 in. length**	**54 each x 40 in. length**
Total filtering surface area	**2200 sq. ft.**	**140 sq. ft.**	**1080 sq. ft.**
Expected dirt holding capacity	**242 lb.**	**14 lb.**	**43 lb.**
Typical total cost of cartridges per filled vessel	**$4,037**	**$432**	**$1,458**
Cost per pound of dirt captured	**$16.68**	**$30.85**	**$33.91**
Typical time/labor needed for change-out	**0.5 operator hour**	**2 operator hours**	**2 operator hours**

Prefilters or Final Filters for:

- Acids and Bases
- Amines
- Beer and wine
- Bottled water
- Carbon beds
- Completion fluids
- Condensate water
- Deep wells
- Desalination
- DI resins
- Edible oils
- EDM fluids
- Glycols
- Groundwater clean-up
- Laundry water
- Liquor
- Machine coolants
- Makeup water
- Organic solvents
- Plating solutions
- Photo chemicals
- RO membranes
- Storm water
- UF membranes
- Ultrapure water
- Waste water
- Waterflood
- Workover fluids

High flow reverse osmosis prefiltration is accomplished with 3M filters in this semiconductor manufacturing plant.

Superior Products from the Filtration Professionals

There is simply no substitute for the many technologically advanced designs from 3M Filtration Products. Which is why we have introduced liquid filtration products throughout the world. Today, we are meeting the vast filtration needs of industries in the Americas, Europe, Asia, Australia and Africa.

Our success has come from the development of superior products by seasoned professionals. These professionals are experienced and ready to assist you with your liquid filtration needs, whatever they may be.

If you would like more information about liquid filtration or 3M's product line, please call one of our professional representatives.

3M has manufacturing, distribution and sales facilities located around the world to assist you with your filtration needs. For the location of a 3M Filtration Products representative near you call 1-800-648-3550, in Canada call 1-519-452-6778.

IMPORTANT NOTICE: User is responsible for determining whether this product is fit for a particular purpose and suitable for user's method of application.

Filters used with hazardous materials may retain the same hazardous properties as the filtered liquid or gas. Always wear appropriate respiratory equipment and protective clothing when handling filters used with hazardous materials. Dispose of only in accordance with federal, state, and local laws and regulations.

LIMITATION OF REMEDIES AND LIABILITY: If the 3M product is proved to be defective, the exclusive remedy, at 3M's option, shall be to refund the purchase price of or to repair or replace the defective 3M product. 3M shall not otherwise be liable for loss or damages, whether direct, indirect, special, incidental, or consequential (including, but not limited to, loss of profits, investment, goodwill or business opportunity), regardless of the legal theory asserted, including negligence, contract, warranty, or strict liability.

Filtration Products

3M Center, Building 60-1S-16
St. Paul, MN 55144-1000
800-648-3550

50% Pre-consumer waste paper
10% Post-consumer waste paper

Printed in U.S.A.
 70-0706-2236-3

MICRO-KLEAN® III

CARTUCHOS RESINADOS DE DENSIDADE GRADUADA

O Cartucho Filtrante MICRO-KLEAN® III é o resultado de contínuas pesquisas, esforços de engenharia e que incorpora a mais avançada tecnologia em fibras com resinas.
Produzido numa grande variedade de materiais, este verdadeiro cartucho de densidade graduada oferece superior economia e vantagens de desempenho.

CONSTRUÇÃO

Os elementos filtrantes MICRO-KLEAN® III utilizam fibras de diâmetros controlados e um exclusivo processo de fabricação, que origina verdadeiros cartuchos de profundi-dade com densidade graduada (quadro 1). As áreas abertas entre as fibras do cartucho são progressivamente menores e mais numerosas na direção do núcleo. Esta estrutura de poros graduados retém as partículas maiores nas camadas externas, enquanto os contaminantes menores são retidos nos caminhos tortuosos das camadas internas do cartucho.

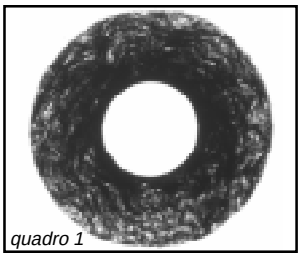

quadro 1

Todas as fibras nesta estrutura de densidade graduada são impregnadas de resinas que são polimerizadas para fixação de cada fibra, produzindo uma estrutura rígida (eliminando o uso de núcleo-suporte) e oferecendo uma performance de filtração consistente sob as mais variadas pressões.
Os cartuchos MICRO-KLEAN® III são identificados por uma gravação em baixo relevo com a marca "CUNO" e os códigos de micragem e formulação.
Para múltiplas alturas foi desenvolvido um novo método de união dos cartuchos utilizando poliamida atóxica fundida (termofusão).
A superfície dos cartuchos pode ser de dois tipos:

- **Lisa:** excelente para retenção de contaminantes gelatinosos ou deformáveis e também para filtração de gases.
- **Ranhurada:** 21 ranhuras externas que aumentam significativamente a área de filtração e a capacidade de retenção das partículas.

Durante o ciclo de fabricação são realizados testes, avaliações e controles estatísticos de processo para monitorar a produção do MICRO-KLEAN® III. Nossa preocupação pela consistência do produto, garante que o cartucho MICRO-KLEAN® III oferecerá os resultados reprodutíveis que as aplicações críticas de hoje necessitam.

VANTAGENS

- Elevada eficiência de remoção de partículas
- Longa vida útil
- Alta resistência a diferenciais de pressão
- Ampla compatibilidade química
- Caraterísticas uniformes de filtração
- Vários formatos e dimensões disponíveis
- Grande homogeneidade estrutural
- Elevada área lateral
- Fabricado no Brasil

CUNO
Fluid Purification

ESPECIFICAÇÕES

FORMULAÇÃO	FIBRA	RESINA	APLICAÇÕES
2	Celulose	Melamínica	Águas: de processo, de alta qualidade e potáveis; resinas, solventes, alimentos, bebidas, cosméticos, produtos farmacêuticos, etc...
3	Celulose	Fenólica	Soluções de baixo pH, agentes redutores fortes, emulsões fotográficas, tintas, águas de processo, solventes, resinas, etc...
8	Acrílica	Fenólica	ácidos inorgânicos e sais ácidos em concentrações de até 10% @ 27ºC, tintas, solventes, resinas, águas de processo, etc...

NOTA: Os materiais usados na formulação 2 são listados pelo FDA.

PARÂMETROS OPERACIONAIS

- ***Temperatura Máxima de Operação:***
  121ºC
- ***Perda de Pressão Máxima:***
  70 psid @ 20ºC
- ***Máxima Perda de Pressão Recomendada para troca do cartucho:***
  35 psid

CÓDIGO DOS CARTUCHOS MICRO-KLEAN

Superfície	Dimensões	Micragem	Formulação	Altura	Acabamento
	78	**Y** - 1 µm	**2**		
G		**A** - 3 µm	**2 ou 3**	**1** - 247,5 mm	**N**
Ranhurado	Diâm. Ext:	**B** - 5 µm	**2 ou 3**		Nenhum
	70 mm	**C** - 10 µm	**2 ou 8**	**2** - 495 mm	**S**
	U	Diâm. Int.:	**F** - 25 µm	**2 ou 8**	
Plástico*					
Liso	25,4 mm	**L** - 50 µm	**8**	**3** - 742,5 mm	**T**
		Q - 75 µm	**8**		Papel*
		W - 125 µm	**8**	**4** - 990 mm	

* Acabamento possível somente para formulação 2

TABELA PARA FLUÍDOS AQUOSOS

GRAU	MICRAGEM NOMINAL	PERDA DE PRESSÃO ESPECÍFICA		MÁXIMA VAZÃO RECOMENDADA	
		psid / gpm	mbar / lpm	gpm	lpm
Y	1	0,56	10,2	4	15
A	3	0,45	8,2	4	15
B	5	0,41	7,4	5	19
C	10	0,37	6,7	5	19
F	25	0,29	5,3	6	23
L	50	0,25	4,5	6	23
Q	75	0,18	3,3	8	30
W	125	0,15	2,7	8	30

NOTAS:

1. Os valores são para cartuchos de 1 altura (9 3/4" - 247,5 mm)
2. A perda de pressão específica é para temperatura ambiente
3. Para Líquidos Não Aquosos, multiplique o valor da perda de pressão específica pelo valor da viscosidade em CENTIPOISE.

SASS - LABORATÓRIO CIENTÍFICO DE APLICAÇÕES

Exclusivo time de suporte técnico formado por cientistas e engenheiros da CUNO que estão disponíveis para fornecer as específicas recomendações das aplicações e os sistemas de filtração mais eficazes e econômicos. Além dos testes e análises conduzidos no avançado laboratório da CUNO, o pessoal do SASS desenvolve testes nas próprias empresas dos clientes, buscando a melhor solução *in loco*. Contate o distribuidor autorizado CUNO local para maiores informações.

Nosso Distribuidor Local:

Sistema de Qualidade certificado por ABS Quality Evaluations Inc.
ISO 9001
CERTIFICADO Nº 31575

CUNO
Fluid Purification

CUNO Pacific Pty. Ltd.
140 Sunnyholt Road
Blacktown, Ns. W. 2148
Austrália

CUNO Filtration Asia Pte. Ltd.
18 Tuas Link 1
3º Floor
Singapore 638699

CUNO Europe S. A.
Chemin Du Contre Halage
62730 - Les Attaques
France

CUNO K. K.
Hodogaya Station Buiding 6F
1 - 7 Iwai-cho, Hodagaya-ku
Yokohama 240 Japan

CUNO INCORPORATED
400 Research Parkway
Meriden, CT 06450
U.S.A.

CUNO Argentina
Hipolito Yrigoyen, 1530
7º Piso - (CP. 1089)
Capital Federal

CUNO Latina Ltda.
Rua AMF do Brasil, 251 A
Distrito Industrial
18120-000 - Mairinque - SP
Tel.: (011) 7998-8555
Fax: (011) 7998-2777
www.cunolatina.com.br

FILTROS DE CARTUCHOS

MODELO DC

Os filtros modelo DC foram desenvolvidos pela engenharia da Cuno para oferecer uma alternativa mais econômica para o tratamento de líquidos, sendo produzidos em três materiais: Aço Carbono, AISI 304 e AISI 316.
A linha DC admite pressões de até 8,8 kg/cm² à temperaturas de 120°C.
O fechamento é do tipo rápido, facilitando a manutenção e a troca dos cartuchos.
Idealizados para atender às mais diversas aplicações, são produzidos em uma ampla gama de tamanhos, capazes de conter desde 4 até 132 cartuchos.

CARACTERÍSTICAS DO PROJETO

- **Materiais:** construídos em aço carbono ou em aço inoxidável.
- **Fechamento:** os modelos 4, 5 e 12 DC são fechados por meio de uma cinta de fechamento. Os modelos 22 e 33 DC utilizam parafusos para fechamento da tampa: estes sistemas permitem uma fácil e rápida operação.
- **Postes triangulares:** servem como guias e remoção dos cartuchos.
- **Defletor:** O fluido que entra é desviado por um defletor para evitar o choque direto com os elementos filtrantes, prevenindo-se a erosão.
- **Guia do cartucho:** Os elementos filtrantes são guiados na parte superior por um conjunto de pratos de vedação que asseguram perfeito alinhamento e vedação.
- **Drenos:** Equipados com drenos para escoamento das câmaras de fluido sujo e limpo.
- **Respiro:** A tampa do filtro é provida de um registro, para a retirada do ar durante o início da operação.

TABELA DE VAZÕES MÁXIMAS

FILTRO MODELO	VAZÕES EM m³/h					
	ÁGUA	80 SSU	150 SSU	300 SSU	600 SSU	1000 SSU
4 DC 1 5 DC 1	15	15	11	9	6	4
4/5 DC 2 4/5 DC 3 5 DC 4	24	20	19	18	15	12
12 DC 2 12 DC 3 12 DC 4	52	48	41	34	27	23
22 DC 3 22 DC 4	91	87	84	75	62	42
33 DC 3 33 DC 4	176	173	149	136	115	97

Esta tabela de vazões deve ser utilizada somente como guia para se estabelecer a capacidade do filtro. Não deve ser usada para dimensionamento. Determina-se o tamanho necessário, calculando-se o número de cartuchos exigidos para atender a vazão nas condições de operação. Quando o número de cartuchos for conhecido e o filtro escolhido, use simplesmente a tabela para garantir que o filtro admita a vazão requerida.

ESPECIFICAÇÕES

Dados operacionais:	
Pressão Máxima	8,8 Kg/cm² a 120°C*
Vazão	Vide tabela de vazões máximas
Materiais de construção:	
Corpo e tampa**	Aço carbono, AISI 304** ou AISI 316**
Internos	AISI 304 ou AISI 316
Cinta de fechamento***	AISI 304***
Gaxeta	Buna N (opcional em Silicone, Viton)
Conexões:	
Rosqueadas ou flangeadas	Vide tabela de dimensões e peso
Cartuchos:	Micro-Klean III, Beta-Klean
Os seguintes cartuchos	Micro-Wind II, Betapure
podem ser usados nos	Poro-Klean, Micro-Screen
filtros modelo DC:	Polypro-Klean
	Cartucho de carvão ativado

*Somente temperatura para o filtro. A operação estará limitada à máxima temperatura suportada pelo cartucho.
**Os modelos 4DC e 5DC são fabricados somente em aço inox AISI 304 ou 316.
***Os modelos 22DC e 33DC possuem fechamento da tampa por parafusos.

CUNO
Fluid Purification

4 DC e 5 DC

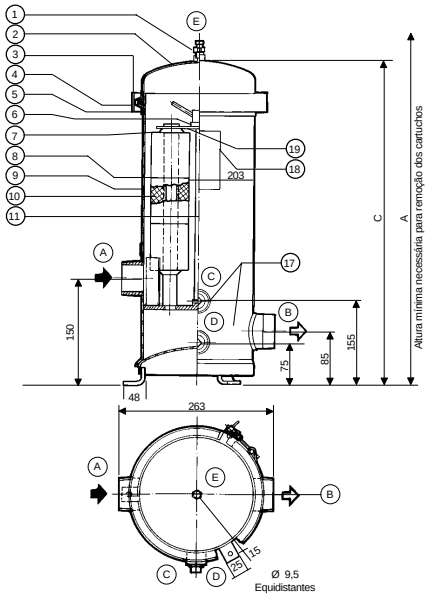

12 DC

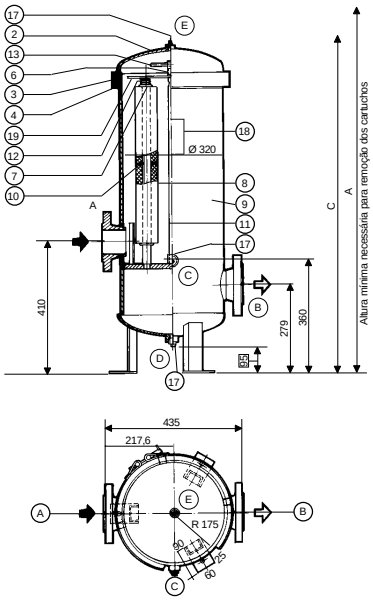

22 DC e 33 DC

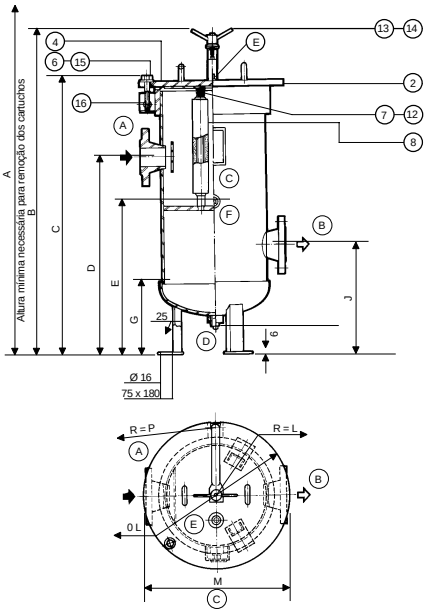

DESCRIÇÃO DAS PEÇAS

1 - Registro de ar Ø 1/4"BSP
2 - Tampa
3 - Cinta de Fechamento
4 - Anel de Vedação do Corpo
5 - Porca de Aperto
6 - Arruela Plana
7 - Conj. Prato Vedação Superior
8 - Elemento Filtrante
9 - Corpo
10 - Poste Triangular
11 - Tirante
12 - Mola Helicoidal
13 - Manivela Conjunto
14 - Braço de Suspensão
15 - Parafuso-Cabeça Sextavada
16 - Pino do Parafuso
17 - Bujão
18 - Placa de Identificação
19 - Placa de Aperto

TABELA DE CONEXÕES E DIMENSÕES

Filtro Modelo	CONEXÕES					Peso Vazio Kg	Volume Interno dm³	Quant. de Cartucho	A	B	C	D	E	F	G	J	P	L	M
	Entrada A	Saída B	Dreno Sujo C	Dreno Limpo D	Respiro E														
4DC1	1.1/2"NPT	1.1/2"NPT	3/4"NPT	3/4"NPT	1/4"NPT	12	16	4	775	--	525	--	--	--	--	--	--	--	--
4DC2	2"NPT	2"NPT	3/4"NPT	3/4"NPT	1/4"NPT	15	24	8	1275	--	775	--	--	--	--	--	--	--	--
4DC3	2"NPT	2"NPT	3/4"NPT	3/4"NPT	1/4"NPT	18	32	12	1775	--	1025	--	--	--	--	--	--	--	--
5DC1	1.1/2"NPT	1.1/2"NPT	3/4"NPT	3/4"NPT	1/4"NPT	12,5	16	5	775	--	525	--	--	--	--	--	--	--	--
5DC2	2"NPT	2"NPT	4/4"NPT	3/4"NPT	1/4"NPT	16	24	10	1275	--	775	--	--	--	--	--	--	--	--
5DC3	2"NPT	2"NPT	3/4"NPT	3/4"NPT	1/4"NPT	19,5	32	15	1775	--	1025	--	--	--	--	--	--	--	--
5DC4	2"NPT	2"NPT	3/4"NPT	3/4"NPT	1/4"NPT	23	40	20	2275	--	1275	--	--	--	--	--	--	--	--
12DC2	3"SO-RF	3"SO-RF	3/4"NPT	3/4"NPT	1/4"NPT	55	68	24	1525	--	1025	--	--	--	--	--	--	--	--
12DC3	3"SO-RF	3"SO-RF	3/4"NPT	3/4"NPT	1/4"NPT	65	88	36	2025	--	1275	--	--	--	--	--	--	--	--
12DC4	3"SO-RF	3"SO-RF	3/4"NPT	3/4"NPT	1/4"NPT	75	108	48	2525	--	1525	--	--	--	--	--	--	--	--
22DC3	4"SO-RF	4"SO-RF	3/4"NPT	3/4"NPT	3/4"NPT	160	145	66	2100	1546	1251	825	403	425	207	295	535	230	550
22DC4	4"SO-RF	4"SO-RF	3/4"NPT	3/4"NPT	3/4"NPT	170	180	88	2600	1792	1497	950	403	425	207	295	535	230	550
33DC3	6"SO-RF	6"SO-RF	1"NPT	3/4"NPT	3/4"NPT	250	235	99	2200	1756	1456	875	605	535	330	455	645	260	665
33DC4	6"SO-RF	6"SO-RF	1"NPT	3/4"NPT	3/4"NPT	280	285	132	2700	2002	1702	1050	605	535	330	455	645	260	665

SASS - LABORATÓRIO CIENTÍFICO DE APLICAÇÕES

Exclusivo time de suporte técnico formado por cientistas e engenheiros da CUNO que estão disponíveis para fornecer as específicas recomendações das aplicações e os sistemas de filtração mais eficazes e econômicos. Além dos testes e análises conduzidos no avançado laboratório da CUNO, o pessoal do SASS desenvolve testes nas próprias empresas dos clientes, buscando a melhor solução *in loco*. Contate o distribuidor autorizado CUNO local para maiores informações.

Nosso Distribuidor Local:

Fluid Purification

CUNO Pacific Pty. Ltd.
140 Sunnyholt Road
Blacktown, Ns. W. 2148
Austrália

CUNO Filtration Asia Pte. Ltd.
18 Tuas Link 1
3º Floor
Singapore 638699

CUNO Europe S. A.
Chemin Du Contre Halage
62730 - Les Attaques
France

CUNO K. K.
Hodogaya Station Buiding 6F
1 - 7 Iwai-cho, Hodagaya-ku
Yokohama 240 Japan

CUNO INCORPORATED
400 Research Parkway
Meriden, CT 06450
U.S.A.

CUNO Argentina
Hipolito Yrigoyen, 1530
7º Piso - (CP. 1089)
Capital Federal

CUNO Latina Ltda.
Rua AMF do Brasil, 251 A
Distrito Industrial
18120-000 - Mairinque - SP
Tel.: (011) 7998-8555
Fax: (011) 7998-2777
www.cunolatina.com.br

PolyKLEAN™

CUNO a 3M company

3M

Elemento Filtrante tipo Cartucho

Cartucho Rígido em fibras de Polipropileno Termicamente Unidas

Benefícios:

- Filtração consistente durante toda a vida útil do cartucho, com uma qualidade superior do filtrado;
- Dez vezes mais vida útil do que cartuchos similares; e
- Baixa perda de carga inicial, proporcionando menor quantidade de cartuchos para a vazão solicitada.

Campos de Aplicação:

- Tintas
- Alimentos e Bebidas
- Petróleo e Gás
- Química
- Farmacêutica
- Eletrônica

Cartucho PolyKLEAN™

A Inovação Tecnológica em filtração de profundidade

Os cartuchos PolyKLEAN™, resultado da nova tecnologia de união por extrusão rígida da CUNO (REBel™), são elementos filtrantes patenteados, totalmente em polipropileno, para filtração em profundidade, e oferecem elevados benefícios:

- remoção de material particulado de forma consistente, durante toda a vida útil do elemento filtrante;
- aumento de área superficial, para aumentar a vida útil do elemento;
- baixa perda de carga inicial em aplicações existentes ou maiores vazões à mesma perda de carga.

O processo exclusivo de fabricação do PolyKLEAN™ combina um rigoroso controle do processo de fabricação, com a segurança conferida pela qualificação dos processos de fabricação atendendo aos preceitos da ISO 9001:2000, gerando um produto final de performance consistente. A maior vida útil do PolyKLEAN™ resultará em um número menor de trocas de elementos filtrantes, enquanto o incremento das características de fluxo pode tipicamente reduzir o número de elementos filtrantes necessários para atender à vazão necessária. A combinação de todos os atributos do PolyKLEAN™ pode reduzir significativamente o custo total de filtração.

Construção do PolyKLEAN™

A tecnologia REBel™ facilita a extrusão das fibras de polipropileno que são usadas para a fabricação do elemento filtrante rígido PolyKLEAN™. O processo de fabricação, exclusivo da CUNO, proporciona um elevado grau de união térmica, fibra a fibra, sem o uso de adesivos, sem a necessidade de um núcleo, produzindo um elemento filtrante tipo cartucho extremamente rígido, cuja estrutura:

- não descarrega os contaminantes com o incremento da pressão diferencial, fato de ocorrência típica de cartuchos meltblown;
- permite a usinagem de ranhuras ao longo da superfície externa do cartucho, sem que haja desfibramento ou fusão, apresentando uma área com mais do que o dobro de área lateral, considerando um cartucho de mesmo diâmetro;
- apresenta uma excepcionalmente baixa perda de carga inicial, em cada um dos graus de filtração disponíveis.

A filtração consistente, durante toda a vida de um elemento filtrante de profundidade, depende totalmente de quanto a estrutura do elemento suporta as flutuações que ocorrem durante a operação, incluindo carga de contaminantes e pressão diferencial.
Estruturas flexíveis, comumente encontradas em cartuchos meltblown ou cartuchos de fio bobinado, tendem a ser comprimidas e mudar de porosidade com o incremento de perda de carga.
Como se pode observar na Foto 1, isto não acontece com cartuchos rígidos.
A compressão pode resultar em uma pequena vida útil do elemento filtrante, pois os poros acabam colapsando e, ao final, fechando. A compressão do meio filtrante pode também causar liberação das partículas que foram retidas.

Foto 1
Estrutura Compressível x Rígida @ 35 psi

Característica	Benefício
Construção rígida	- Elimina descarga de contaminantes a altos diferenciais de pressão - Remoção eficiente de materiais deformáveis - Remoção superior e consistente de partículas por toda a vida do cartucho
Maior capacidade de retenção	- Menor troca de cartuchos - Maior vida do filtro
Ranhurado, com maior área superficial	- Permite utilização total da matriz de profundidade - Maior vida do filtro
100% Polipropileno	- Compatibilidade em uma vasta gama de aplicações - Sem adesivos, resinas, surfactantes e lubrificantes
Materiais de construção listados no FDA 21CFR	- Atende à regulamentação para contato com alimentos e bebidas
Estrutura sem núcleo	- Facilita o descarte por incineração ou moagem
Elemento sem emendas	- Não há quebra de juntas - Fácil de instalar

O robusto cartucho PolyKLEAN™ retém e mantém os contaminantes em sua matriz de estrutura rígida, mesmo com o incremento da pressão diferencial. Além de uma maior eficiência de filtração e de uma maior retenção de contaminantes durante toda a sua vida útil, a estrutura única do cartucho de profundidade PolyKLEAN™ apresenta uma capacidade de retenção de contaminantes maior que a de cartuchos tradicionais.
O PolyKLEAN™ é totalmente autoportante, nada parecido com os cartuchos meltblown macios ou os cartuchos de fio bobinado, e é ranhurado para propiciar mais do que o dobro da área lateral externa. O aumento da área superficial ajuda a prevenir contra uma possível selagem da superfície externa do cartucho devido à quantidade de contaminantes ou ainda de géis, e proporciona a total utilização da profundidade do elemento filtrante. Isso resulta em uma vida útil maior que a de cartuchos concorrentes.

Performance do PolyKLEAN™

Os elementos filtrantes PolyKLEAN™, fabricados utilizando a tecnologia REBel™, apresentam características de filtração superiores. A estrutura rígida permite um incremento de performance, que pode ser medida e comparada à de outras estruturas de outros cartuchos com equivalentes taxas de remoção.

Eficiência de Remoção Consistente

O Gráfico 1 apresenta a eficiência de remoção dos cartuchos PolyKLEAN™ e de outros cartuchos típicos, meltblown e de fio bobinado. Note que os cartuchos PolyKLEAN™ exibem excelente eficiência de filtração até a perda de carga recomendada para a troca (35 PSIG ~ 2,46 kg/cm² M), enquanto outros cartuchos apresentam significantes perdas em eficiência de remoção a pressões diferenciais muito menores (10 PSIG ~ 0,7 kg/cm² M). O cartucho rígido PolyKLEAN™ resiste à deformação, by-pass, compressão e descarga de material particulado retido.
Para demonstrar a consistência de remoção do cartucho PolyKLEAN™, foi medida a eficiência de filtração em 4 pontos distintos de perda de carga: inicial, 0,5 PSID (~ 0,04 kg/cm² M), 1 PSID (~ 0,07 kg/cm² M) e 10 PSID (~ 0,7 kg/cm² M). Os elementos filtrantes equivalentes de concorrentes foram testados nas mesmas condições para propiciar uma comparação direta.

Como mostrado no Gráfico 2, comparando a eficiência dos cartuchos testados com a eficiência do PolyKLEAN™, verificamos que o PolyKLEAN™ apresenta uma consistente e estável remoção de contaminantes durante toda a duração do teste.
Note que as outras estruturas de filtros demonstrados, meltblown e bobinado, provêem remoção ineficiente e não apresentam performances constantes mesmo em condições controladas de carga uniforme de contaminantes e pressão.

Gráfico 1 - Comparação de Eficiência entre Cartuchos

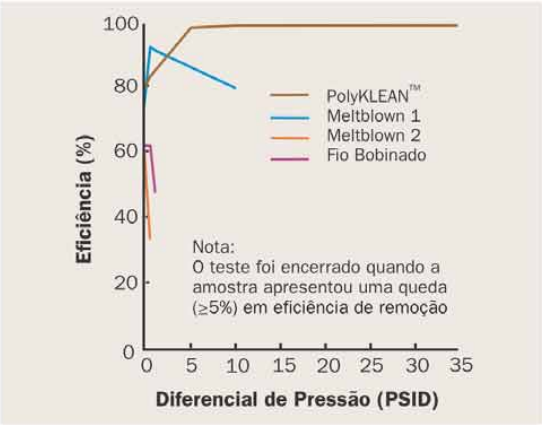

Gráfico 2 - Comparação entre cartuchos com grau de filtração de 5 µm

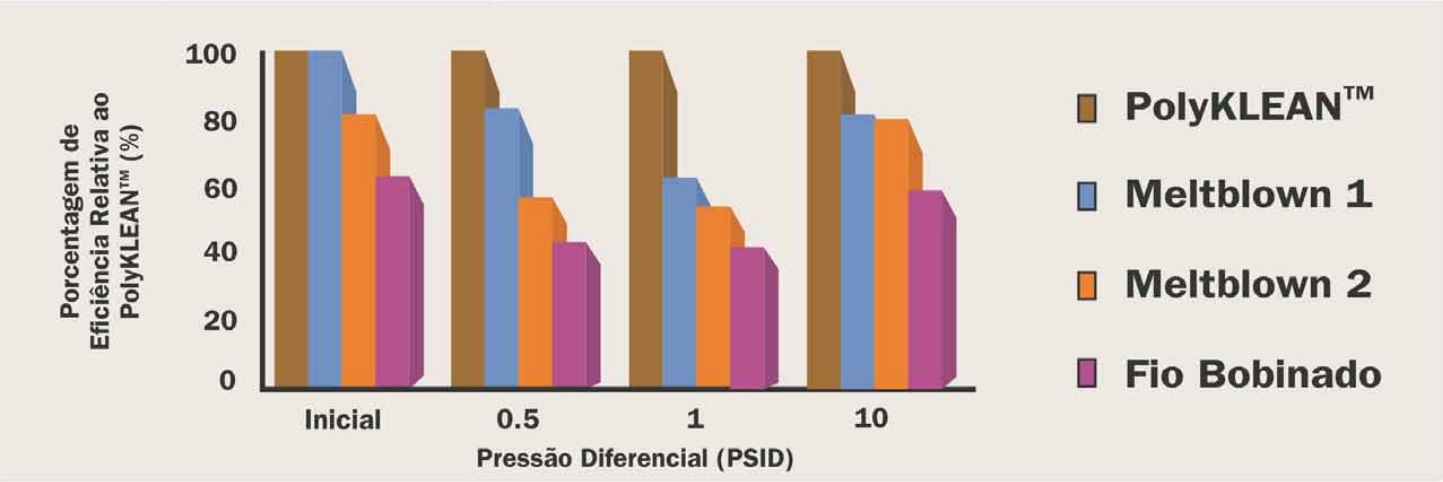

Superior Vida em Serviço

Exaustivos testes do PolyKLEAN™ demonstraram uma vantagem apreciável de vida em serviço. O Gráfico 3 compara o elemento filtrante rígido PolyKLEAN™ com outros filtros de eficiência equivalente. Todos eles foram testados sob condições idênticas.
A comparação dos testes realizados, quando os elementos filtrantes são submetidos à mesma carga de contaminantes de até 20 PSID, mostra a vida útil relativa dos elementos filtrantes testados. Como representado, o PolyKLEAN™ oferece uma vida útil em serviço até quase duas vezes maior que o segundo colocado, e até 10 vezes ou mais que os demais elementos filtrantes.

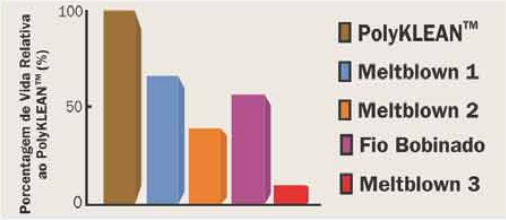

Gráfico 3 - Comparação de Vida entre Cartuchos de Eficiência Similar

Baixo Diferencial de Pressão Inicial

A uma vazão constante, o design único do PolyKLEAN™, bem como sua construção, oferece uma baixíssima queda de pressão inicial quando comparado aos elementos filtrantes dos concorrentes. O Gráfico 4 demonstra claramente a vantagem em vazão do PolyKLEAN™ quando comparado a outros elementos filtrantes de 5 micra da concorrência, sejam meltblown ou fio bobinado. Isto se traduz em especificar uma quantidade menor de PolyKLEAN™ ao dimensionar um sistema de filtração a uma determinada vazão.
Por exemplo, em um processo cuja taxa de vazão de água é de 180 GPM e máxima queda de pressão do filtro limpo de 0,5 PSID, baseado na literatura dos fabricantes concorrentes, a Tabela 1 mostra que um sistema utilizando elementos filtrantes PolyKLEAN™ requer quantidade menor de cartuchos, bem como o tamanho do vaso é reduzido, reduzindo custos operacionais e de capital de investimento.

Tabela 1 - Comparação entre cartuchos de 5 µm em Fluidos Aquosos

Fabricante	Cartuchos de 30" de comprimento necessários para uma vazão de 180 GPM	Diâmetro Necessário (mm) da Carcaça para um cartucho de 30" de comprimento, aberto dos dois lados
PolyKLEAN™	12	305
Parker Fuflo® Honeycomb™ Wound - Fio Bobinado em PP	29	508
Osmonics Hytrex®	60	762
Pall Claris®	24	406

** Baseado em literatura publicada pelos fabricantes.*

Gráfico 4 - Vazão *versus* Perda de Carga (Veja Nota na Tabela 1)

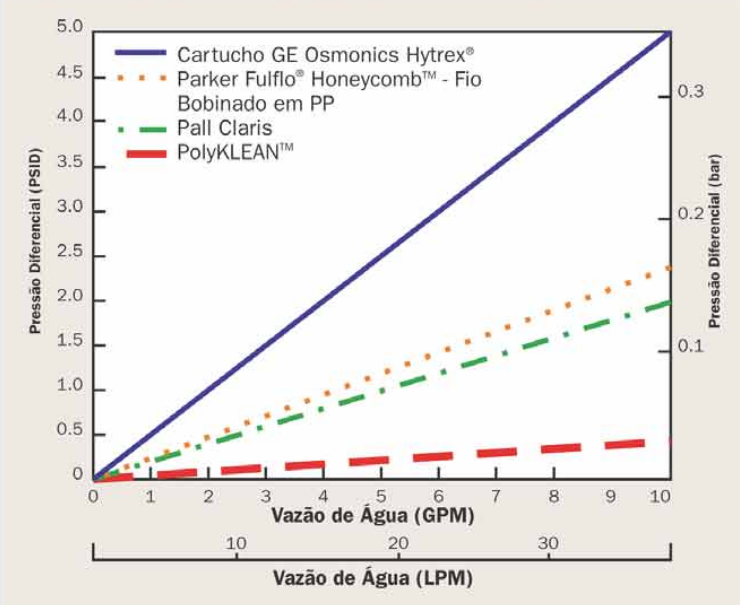

Taxas de vazão do PolyKLEAN™

O PolyKLEAN™ permite uma taxa de vazão até 10 vezes maior que os elementos filtrantes similares da concorrência. Isto é uma vantagem significativa de Pressão Diferencial x Vazão e se traduz em menor capital de investimento necessário para vasos de pressão (filtros) e quantidade menor de cartuchos a serem comprados.

Para dimensionar um sistema com PolyKLEAN™, dados de Pressão Diferencial x Vazão aparecem na Tabela 2.

Fulflo® e Honeycomb™ são marcas registradas de Parker Hannifin Corporation. Hytrex® é uma marca registrada de GE. Osmonics and Claris é uma marca registrada de Pall Corporation.

Tabela 2 - Comparação entre cartuchos de 5 µm em Fluidos Aquosos

Grau de Filtração Nominal (µm)	Perda de Carga Específica para um cartucho de 10"(PSID/GPM.cP)	Perda de Carga Específica para um cartucho de 10"(mbar/LPM.cP)
1	0,073	1,330
5	0,042	0,765
10	0,025	0,455
25	0,015	0,273
50	0,010	0,182
75	0,006	0,109

Para calcular a queda de pressão com o filtro limpo para fluidos Newtonianos, use a fórmula abaixo em conjunto com os valores de Perda de Carga Específica. Estes valores devem ser efetivamente utilizados quando três das quatro variáveis (viscosidade, vazão, diferencial de pressão e grau de filtração) são conhecidas.

$$N_c = \frac{(Q * \Delta P_e * \nu)}{\Delta P_i}$$, onde:

- N_c = Número Mínimo de Cartuchos (módulos de 1 altura - 10")
- Q = Vazão Total Requerida
- ΔP_e = Perda de Carga Específica (Vide Tabela 2)
- ν = Viscosidade do Fluido (cP)
- ΔP_i = Perda de Carga Inicial de Projeto (Limpo)

Cuidados devem ser tomados no dimensionamento de um sistema com PolyKLEAN™. Selecione um vaso que irá comportar pelo menos o número requerido de elementos de 10", e tenha certeza de que a vazão total do sistema não exceda a vazão máxima da carcaça.

Aplicações - PolyKLEAN™

Alimentos e Bebidas	
Água Mineral	Refrigerantes
Energéticos	Sucos
Revestimentos	
Fabricantes de Resinas (Água e Solventes)	Tintas em geral
Tintas gráficas	
Farmacêutico	
Pré de Osmose Reversa	Água de Enxágue
Produtos Químicos	Princípio Ativo
Controle de Particulado em WFI	Xaropes
Industrial	
Laminação	Água de Resfriamento
Plantas de Dessalinização	Água de Lavagem de Peças
Papel e Celulose	Peróxidos
Aditivos	Selos Mecânicos de Bombas
Petróleo & Gás	
Amina (MEA/DEA) & Glicol (MEG/TEG)	Fluido de Completação
Água de Injeção em Poços de Petróleo	Água para Hidrojateamento
Água de Resfriamento de Processo	
Químico	
Poliestireno & Polipropileno	PVC-VCM
Produtos Químicos Intermediários	Pesticidas & Herbicidas
Eletrônico	
Placas de Circuito Impresso	Cristal Líquido
Banhos para Semicondutores	Osmose Reversa
Tubos de Imagem	CDs e DVDs

Especificações Técnicas do PolyKLEAN™

Tabela 3 - Especificações

Construção	
Meio Filtrante e Conectores	Polipropileno
Vedações e O-Rings	Silicone, Viton, Neoprene, Buna N ou Polietileno
Condições de Operação	
Temperatura Máxima de Operação	60 °C (~ 140 °F)
Diferencial de Pressão Máximo Admissível	1,7 bar @ 60 °C (25 PSID @ 140 °F) 4,1 bar @ 20 °C (60 PSID @ 68 °F)
Pressão Diferencial Recomendada para a Troca	2,4 bar @ 20 °C (35 PSID @ 68 °F)
Dimensões do Cartucho	
Diâmetro Interno (nominal)	28 mm (1.1")
Diâmetro Externo (nominal)	66 mm (2,6")
Comprimento (nominal) - Sem emenda	248 - 1524 mm (9.3/4" - 60")

Normatização
O PolyKLEAN™ atende aos requerimentos da USP para Biological Test for Plastics, Class VI-70°C.
Materiais usados na fabricação do PolyKLEAN™ atendem aos requerimentos da USFDA 21CFR para alimentos e bebidas.

Compatibilidade Química

A construção do elemento em 100% Polipropileno oferece excelente compatibilidade química em muitas aplicações de processamento de fluidos. A compatibilidade é influenciada pelas condições operacionais do processo. Em aplicações críticas, os elementos devem ser testados sob as condições reais para determinar a compatibilidade.

Tabela 4 - Compatibilidade do Fluido

Fluido	Temperatura	Fluido	Temperatura	Fluido	Temperatura
Ácido Acético @ 20%	60°C (140°F)	Peróxido de Hidrogênio	38°C (100°F)	Carbonato de Sódio	38°C (100°F)
Aminas	60°C (140°F)	MEK	21°C (70°F)	Hidróxido de Sódio @ 70%	60°C (140°F)
Hidróxido de Amônia @ 10%	60°C (140°F)	Óleo Mineral	21°C (70°F)	Ácido Sulfúrico @ 20%	60°C (140°F)
Água Sanitária @ 5,5%	21°C (70°F)	Ácido Nítrico	38°C (100°F)	Ácido Sulfúrico @ 70%	38°C (100°F)
Etileno glicol	60°C (140°F)	Hidróxido de Potássio	60°C (140°F)	Uréia	60°C (140°F)

SASS - Laboratório Científico de Aplicações

Um time de suporte técnico formado por cientistas e engenheiros está disponível para oferecer recomendações para aplicações específicas, a fim de obter a melhor relação custo-benefício em um sistema de filtração. Além dos vários ensaios e testes conduzidos em avançados laboratórios, o time do SASS pode também realizar testes em campo, na sede do cliente. Contate seu distribuidor CUNO para mais informações.

Serviço Mundial

A CUNO é uma empresa multinacional e tem sua matriz baseada nos EUA, com pontos de fabricação e distribuição em todo o mundo, inclusive no Brasil, com um parque fabril de mais de 60.000 metros quadrados, além de seu Laboratório de Aplicações (SASS).
Parques fabris, distribuidores e laboratórios em todo o mundo trazem soluções qualitativas para o desafio das aplicações de filtração.

Filtros CUNO

A CUNO fabrica uma linha completa de carcaças - padrão e especiais - que atendem aos requerimentos de diversas aplicações. Modelos disponíveis para serviço em gases e líquidos em uma vasta gama e materiais, desde plásticos até vasos norma ASME em 316L, apropriados para as necessidades de várias aplicações.
Para mais informações sobre as carcaças de fabricação CUNO, consulte o seu distribuidor local e solicite a literatura mencionada abaixo.

Série SL
- Disponível em uma grande variedade de tamanhos
- Código ASME
- Aço Carbono, 304, 304L, 316, 316L

Série SD
- Disponível em uma grande variedade de padrões
- Aceita cartuchos abertos dos dois lados ou com conectores 222
- 304 ou 316

Série CT
- Disponível para um cartucho de até 4 alturas, com ou sem conectores
- 304 ou 316
- Suporte individual

Série AL
- Carcaça econômica em ferro fundido e aço carbono
- Fácil montagem/desmontagem
- 3 a 18 cartuchos

CTG-Klean
- Os elementos são montados e selados, formando uma unidade ("Pack"), que é montada dentro da carcaça
- O "Pack" é descartável
- Pode ser removido da carcaça e guardado para ser usado na filtração do próximo lote, até atingir a perda de carga recomendada para troca
- Utilização extremamente fácil, elimina a necessidade de limpeza da carcaça

Série Express (ES)
- Máxima flexibilidade de projeto, para uma grande gama de requisitos de processo
- Código ASME
- Aço Carbono ou 316L

Série VC ou PP
- Carcaça construída em PVC ou PP
- Capacidade para até 5 cartuchos (diâmetro) e até 4 alturas

Série PC
- Os elementos filtrantes são montados em um kit, permitindo uma troca rápida e maior facilidade de limpeza
- Código ASME

Série DC
- Linha leve em aço inoxidável
- De 4 a 33 cartuchos (diâmetro) e até 4 alturas (132 EQSL)
- Abertura rápida

Série 1BR
- 1 cartucho (diâmetro) e até 4 alturas
- Até 21 kgf/cm²M
- Aço Carbono, 304, 304L, 316, 316L

Série 1H
- 1 cartucho (diâmetro) e até 4 alturas
- Ideal para aplicações em alta pressão (até 350 kgf/cm²M)
- Aço Carbono, 304, 304L, 316, 316L

Série 1M
- 1 cartucho e até 2 alturas
- Carcaça em Polipropileno

Carcaças ES - A Série ES de carcaças é um modelo construído de acordo com o Código ASME, em aço carbono ou aço inoxidável - 316L. Com uma capacidade de 12 a 480 cartuchos de comprimento padrão - EQSL (10"), os modelos ES atendem a uma grande gama de vazões.

Carcaças AL e CT - AL e CT são carcaças que oferecem uma variedade de tamanhos, desde 3 até 18 elementos. Construídas em aço carbono, com internos em aço inoxidável, estas carcaças atendem às necessidades gerais da indústria.

Carcaças DC & SD - Estas carcaças oferecem um excelente binômio custo-benefício. Construídas em aço inoxidável, são adequadas para uma grande variedade de aplicações.

PolyKLEAN™ em "Packs" para CTG-KLEAN - O projeto diferenciado proporciona um sistema fechado, separando a parte que deve resistir à pressão de projeto da aplicação (carcaça) do "Pack" que isola o fluido das paredes da carcaça. Este projeto reduz os custos de limpeza da carcaça e reduz o risco de exposição do operador ao fluido que está sendo filtrado.

PolyKLEAN - Codificação

Modelo	Comprimento	Grau de Filtração	Material	Superfície	Embalagem	Anel Suporte	Conectores nas extremidades	Vedações
RT PolyKLEAN	**9** - 9.3/4" - 248 mm* **10** - 10" - 254 mm **19** - 19.1/2 - 496 mm* **20** - 20" - 508 mm **29** - 29.1/4" - 744 mm* **30** - 30" - 762 mm **39** - 39" - 991 mm* **40** - 40" - 1016 mm **49** - 48.3/4" - 1238 mm **50** - 50" - 1270 mm **60** - 60" - 1524 mm	**Y** - 1 µm **A** - 3 µm **B** - 5 µm **C** - 10 µm **F** - 25 µm **H** - 40 µm **L** - 50 µm **Q** - 75 µm	**16** Polipropileno	**G** Ranhurada	**2** - Caixa de Papelão com Colmeia **3** - Saco Plástico + Etiqueta L + Caixa de Papelão **4** - Saco Plástico + Etiqueta P + Caixa de Papelão	**0** Nenhum	**B** SOE - O-Ring 226 + Centralizador **C** SOE - O-Ring 222 + Centralizador **F** SOE - O-Ring 222 + Cap **N** DOE - Nenhum **P** DOE - Extensor do Núcleo em Polipropileno **Q** SOE - Tampa sem Mola **P** SOE - Tampa com Mola	**A** Silicone **B** Viton **C** EPR **D** Buna N **G** Polietileno** **H** Silicone Transparente **N** Nenhum**

*Disponível somente com as terminações N ou P
**Disponível para os modelos N, P, Q e R

SOE - Single Open End - aberto de um lado só
DOE - Double Open End - aberto dos dois lados

Exemplos:

RT40Y16G40BD
RT29Q16G40NN

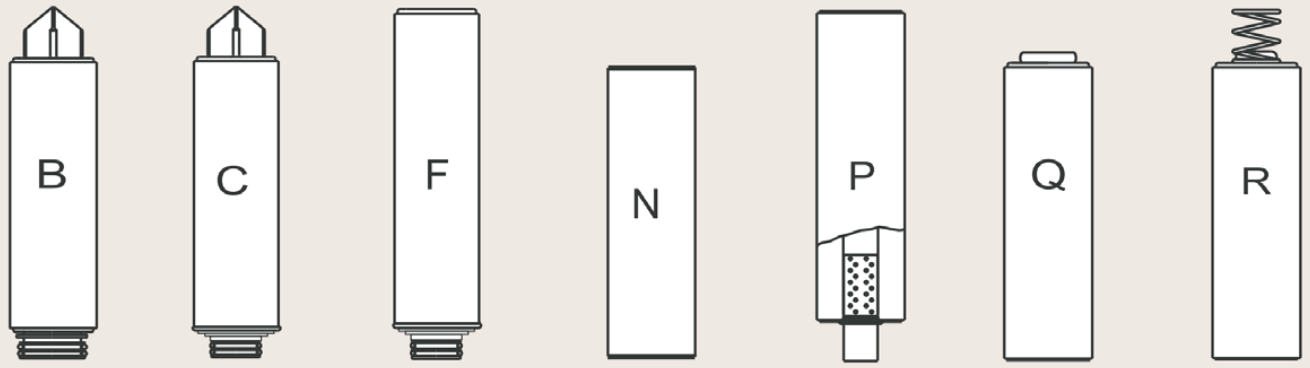

SASS – LABORATÓRIO CIENTÍFICO DE APLICAÇÕES

A base da filosofia da CUNO é o serviço a clientes, não somente em relação à qualidade dos produtos e pronta entrega, mas principalmente na solução de problemas, consultoria de aplicações e intercâmbio de informações científicas. O SASS - Laboratório Científico de Aplicações da CUNO é formado por um grupo de cientistas e engenheiros dedicados a trabalhar em conjunto com os clientes na solução dos difíceis problemas de separação e auxiliar na seleção dos sistemas mais eficientes e econômicos. O SASS constitui-se no vínculo vital entre a CUNO e os usuários dos sistemas filtrantes CUNO.
Os especialistas do SASS estão capacitados para executar uma grande gama de ensaios e testes em escala de laboratório, fazendo a correspondente extrapolação à escala industrial.

CUNO®
a 3M company

3M

CUNO Filtration Asia Pte Ltd
18 Tuas Link 1 (3rd Floor)
Singapore 638599

CUNO Pacific Pty Ltd
140 Sunnyholt Road
Blacktown, NSW 2148
Australia

Cuno Incorporated
400 Research Parkway
Meriden, CT 06450, U.S.A.
Tele: (800) 243-6894
(203) 237-5541
Fax: (203) 238-8977

CUNO Latina Ltda.
Rua AMF do Brasil, 251
18120-000 - Mairinque-SP
Brasil
Fone: 55 (11) 4718-8555
Fax: 55 (11) 4718-2777
www.cunolatina.com.br

Cuno Filtration Shanghai Co, Ltd
No. 2 Xin Miao San Rd,
Xin Miao Town,
Song Jiang District,
Shanghai. China. 201612

CUNO K.K.
Hodogaya Station
Building 6F
1-7 Iwai-cho, Hodogaya-ku
Yokohama 240 Japan

CUNO Ltd
21 Woking Business Park
Albert Drive
Woking, Surrey GU215JY
United Kingdom

CUNO Latina Sucursal Argentina Ltda.
Hipólito Yrigoyen, 1530/7 floor
(CP 1089) Buenos Aires
Argentina
Fone: 54 (11) 4382-9930
Fax: 54 (11) 4382-9763
www.cuno.com.ar

NOVO

PolyNet™

CARTUCHOS ABSOLUTOS DE POLIPROPILENO

A Futura Geração na Tecnologia de Filtração em Profundidade

O cartucho filtrante PolyNet™ é o mais novo avanço na tecnologia CUNO de filtração em profundidade. O cartucho é construído inteiramente em polipropileno, com tecnologia patenteada, que utiliza uma inovação no padrão de fluxo permitindo maior vazão através do meio filtrante. O resultado é um filtro de grau absoluto, com ampla superioridade na vida útil, fornecendo melhor custo efetivo de filtração se comparado com a tecnologia convencional dos cartuchos melt-blown, **o novo líder em desempenho na purificação de fluídos!**

AS VANTAGENS

- Superior Vida Útil em Serviço - até 4 vezes mais capacidade de retenção de contaminantes se comparado aos cartuchos concorrentes;
- Cartuchos filtrantes de profundidade totalmente em polipropileno para uma vasta compatibilidade química e térmica;
- Graus de filtração de 0,5 - 70 micra, para um grande número de aplicações;
- Desempenho de Grau Absoluto para uma qualidade de filtração consistente;
- Apresenta superior retenção de partículas com o aumento do diferencial de pressão;
- **PolyNet PB** projetado e testado para uso em aplicações **FARMACÊUTICAS,** fornecido com Certificado de Qualidade, documentando os testes realizados e o número do lote de fabricação.

CONSTRUÇÃO DO CARTUCHO

A CUNO projetou o cartucho PolyNet™ para oferecer uma significativa vida útil superior em serviço, mantendo a eficiência de filtração consistente. Os cartuchos PolyNet™ apresentam este resultado através de um projeto inovador do cartucho, que permite uma distribuição uniforme do fluxo do fluído e dos contaminantes através de toda profundidade.

A construção dos cartuchos PolyNet™ combina meio filtrante de polipropileno com diferentes canais de fluxo com uma malha de distribuição de fluído, para formar múltiplas camadas. Criteriosamente posicionados, os canais de fluxo do meio filtrante permitem um grande movimento do fluído de camada por camada.

Três distintas seções do meio filtrante, feitas de camadas de meio filtrante com diferentes canais de fluxo e malhas de distribuição, são combinadas para formar o PolyNet™.

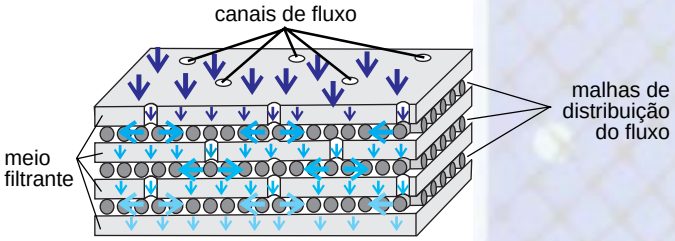

Internamente, em cada camada do meio filtrante, uma porção do fluído flui através do meio filtrante enquanto o restante do fluxo segue diretamente para a camada de distribuição seguinte através dos canais de fluxo. A malha de distribuição de fluído fornece caminhos de fluxo em todo comprimento e largura para uma distribuição uniforme do fluxo do fluído através da cada camada sucessiva do meio filtrante.

A DIFERENÇA É O DESEMPENHO

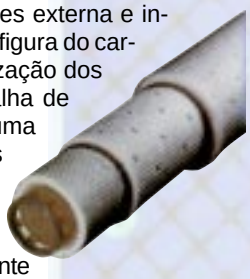

Os canais de fluxo aparecem nas seções externa e intermediária do cartucho, como mostra a figura do cartucho em corte. O tipo, número e localização dos canais de fluxo combinados com a malha de distribuição de fluído, asseguram que uma quantidade uniforme de contaminantes seja distribuída para cada camada internamente destas duas seções, enquanto mantém a vazão consistente.

O número de canais de fluxo do meio filtrante diminui da seção externa para a intermediária, para assegurar uma igualdade na carga de contaminantes por todo o cartucho. A seção interna, suportada por um rígido núcleo de polipropileno e igual a aproximadamente um terço da profundidade do cartucho, não contém canais de fluxo e é a seção de qualificação final do cartucho, assegurando um desempenho de grau absoluto.

A igualdade na distribuição do fluído contaminado através da profundidade do cartucho é o ponto chave da excepcional vida útil em serviço, menor queda de pressão e redução no custo de filtração dos cartuchos PolyNet™.

CUNO

Fluid Purification

O RESULTADO

Superior Vida Útil em Serviço

Inúmeros testes têm demonstrado que os cartuchos dos concorrentes de equivalente grau de retenção, submetidos a mesma carga de contaminantes entopem mais rapidamente que os cartuchos PolyNet™. Os resultados dos concorrentes mostram uma significativa redução na vida útil em serviço e uma imprevisível eficiência de filtração. Os cartuchos PolyNet™ fornecem uma melhora na vida útil em serviço de **até 4 vezes mais do que os produtos dos concorrentes.**

Menor Queda de Pressão

O design e construção únicos do cartucho PolyNet™ permitem uma queda de pressão significativamente menor quando comparado com cartuchos equivalentes de polipropileno de profundidade tipo melt-blown. Para um mesmo diferencial de pressão inicial, uma menor quantidade de cartuchos PolyNet™ é requerida, resultando em menor investimento de capital na compra da carcaça e de cartuchos.

A CONFIANÇA DA CONSISTÊNCIA

Os cartuchos PolyNet™ utilizam construção e design avançado, para conseguir com êxito um nível de filtração consistente. Combinado com uma excepcional vida útil em serviço, o desempenho consistente dos cartuchos PolyNet™ produzem resultados previsíveis ao longo de toda vida útil do cartucho.

POLYNET ABSOLUTO

O desempenho consistente, do início ao fim do processo de filtração, é a meta de todo usuário de filtros e a solução é fornecida pelos cartuchos PolyNet™! Os graus de remoção absoluta para os cartuchos PolyNet™ são determinados utilizando um teste de desempenho desenvolvido pela CUNO, seguindo os procedimentos gerais descritos na ASTM STP 975. A CUNO define grau absoluto para um Grau inicial Beta de 1000, que equivale a uma eficiência de remoção de um determinado tamanho de partícula de 99,9%.

Grau Absoluto(mm)	PolyNet	PolyNet PB
0,5	T005	P005
1	T010	P010
2	T020	P020
3	T030	P030
5	T050	P050
10	T100	P100
20	T200	P200
30	-	P300
40	T400	P400
50	T500	P500
70	T700	P700

BENEFÍCIO - REDUÇÃO TOTAL DO CUSTO DE FILTRAÇÃO

As vantagens de desempenho e vida útil superior dos cartuchos PolyNet™ permitem uma diminuição direta de custos, pela redução do número de cartuchos utilizados. E ainda, a consequente redução na frequência de trocas dos cartuchos, diminuindo os custos de mão de obra direta e do descarte dos cartuchos. **Os cartuchos PolyNet™ fornecem desempenho e valor!**

POLYNET PB COM CERTIFICADO DE QUALIDADE E RASTREABILIDADE

Nos cartuchos PolyNet™ PB são realizados inúmeros testes de qualidade antes de serem liberados, garantindo segurança e desempenho consistente nas aplicações farmacêuticas que exigem **o Certificado de Qualidade e Rastreabilidade do lote.** São fabricados e testados conforme ***ISO 9001.*** Os cartuchos PolyNet™ PB são marcados com um único número de lote para fornecer total rastreabilidade, através dos registros de fabricação dos componentes das matérias primas. Um documento com os resultados dos testes está disponível para fácil atendimento das normas reguladoras. Os cartuchos PolyNet™ PB atendem os testes de qualidade do filtrado que incluem:

- Reatividade Biológica In Vivo, USP* - para Plásticos Classe VI @ 121°C
- Não-Pirogenicidade, USP - Teste de Endotoxina Bacteriana (<0,25 EU/ml);
- Limites de Particulados em Injetáveis, USP - e conformidade com os requerimentos da não liberação de fibras pelo CFR** 21;
- Condutividade & Carbono Orgânico Total (TOC), USP - Água Purificada.

USP* - United States Pharmacopea
CFR** - Code Federal Regulation

APLICAÇÕES DO POLYNET

PolyNet™ com sua construção única patenteada, fornece benefícios aos clientes numa grande variedade de aplicações na purificação de fluídos. A alta qualidade e a redução no custo total de filtração são benefícios muito apreciados pelos clientes industriais:

Química & Petroquímicas

Redução de custo é o ponto mais crítico no processamento de produtos químicos e petroquímicos de alta qualidade. Utilizando os cartuchos PolyNet™ em aplicações que requerem desempenho absoluto, fornecendo longa vida útil em serviço, demanda consistente para atender os padrões de qualidade e como consequência, uma redução no custo de filtração. Principais aplicações: Ácidos e alvejantes (Hipoclorito de Sódio); Água de injeção e aminas, etc.

Alimentos & Bebidas

A maior ênfase pela qualidade dos produtos exigida pelos consumidores, como também pelas regulamentações governamentais estão conduzindo hoje as indústrias alimentícias e de bebidas, para filtrações de melhor qualidade (mais finas). Os cartuchos PolyNet™ atendem estes desafios por toda sua vida útil em serviço. Principais aplicações: Redução de turbidez e particulado nas águas engarrafadas e de refrigerantes; Proteção da membrana de Osmose Reversa e de sprays; Segurança para finos de carvão e terra diatomácea; Águas de blendagem, rinsagem, enxágue, esterilização, etc.

Indústria em Geral

Os cartuchos PolyNet™ são ideais para grandes quantidades de contaminantes por causa de sua característica única de fluxo e longa vida útil em serviço que fornecem reduzidos custos de filtração. Principais aplicações: Lubrificantes, detergentes e água de rejeito; Têxteis & Banhos para Galvanoplastia; Papel & Celulose; Águas de processo & de uso geral; etc.

Química Fina & Eletrônicos

Os cartuchos PolyNet™ com sua característica construtiva são ideais para aplicações eletrônicas, onde uma grande quantidade de contaminantes está presente e uma filtração eficiente com longa durabilidade é requerida. Principais aplicações: Lama de CMP (polimento químico mecânico) usada na fabricação de wafer e semicondutores; Pré-filtração de OR da água de alimentação com alto SDI; Filtração de banho de deposição de sulfato de cobre na fabricação de circuito impresso; Filtração da tinta da máscara e da água de enxágue para produção de tubo de raios catódicos; etc.

Tintas & Revestimentos

Os cartuchos PolyNet™ são ideais para filtração de tintas/revestimentos com alto teor de sólidos, fornecendo superior vida útil em serviço enquanto removem seletivamente as partículas grandes indesejáveis e permitindo que as partículas menores desejáveis passem. Principais aplicações: Revestimentos para papéis e filmes; Filmes fotográficos; Revestimentos para lentes óticas e latas (embalagens); Tintas e tintas gráficas de alta qualidade; etc.

APLICAÇÕES DOS CARTUCHOS POLYNET PB

A crescente ênfase na economia dos processos farmacêuticos e para a qualidade dos produtos finais, está orientando hoje as **INDÚSTRIAS FARMACÊUTICAS E DE BIOTECNOLOGIA** para filtração de alta tecnologia. Os filtros PolyNet™ PB fornecem alta performance na clarificação e pré-filtrações, possibilitando reduzidas trocas de cartuchos, maior vida útil em serviço e significtivos melhoramentos na economia de todo o processo.

Farmacêuticas

- LVP & SVP
- Antibióticos & Oftálmicos
- Diagnósticos & Química Fina
- Lavadoras de Frascos & Ampolas
- Soluções Orais & Tópicos
- Sistemas de WFI & DI
- Ar & Gases
- Solventes

Biológicos & Bioprocessos

- Vacinas
- Fracionamento de Plasma
- Cultura de Célula de Animais
- Proteção de Colunas Cromatográficas
- Fermentação
- Purificação de Proteínas
- Proteção de Ultra Filtração
- Meio de Cultura & Soros de Animais

ESPECIFICAÇÕES

PolyNet™	**T005**	**T010**	**T020**	**T030**	**T050**	**T100**	**T200**	**-**	**T400**	**T500**	**T700**
PolyNet™ PB	**P005**	**P010**	**P020**	**P030**	**P050**	**P100**	**P200**	**P300**	**P400**	**P500**	**P700**
Grau Absoluto(mm)	**0,5**	**1**	**2**	**3**	**5**	**10**	**20**	**30**	**40**	**50**	**70**
Eficiência	**99,9% (Beta 1000)**										
PERDA DE PRESSÃO ESPECÍFICA (com água DI @ 21°C por cartucho de 9 ¾" ou 10")											
psid/gpm/1cP	4.5	2.5	0.87	0.44	0.32	0.14	0.065	0.05	0.042	0.029	0.025

MATERIAIS DE CONSTRUÇÃO (todos materiais são listados pelo FDA – CFR 21)	
Meio filtrante e Malha	Polipropileno
Insertos para conectores B,C e F	Polisulfona e Aço Inoxidável 316
Vedações e O-Rings	Silicone, Viton, EPR, Nitrila e Polietileno
CONDIÇÕES OPERACIONAIS	
Temperatura máxima de operação	80°C
Diferencial de pressão recomendado para troca de cartuchos	35 psid @ 30°C 15 psid @ 80°C
Sanitização com água quente @ 85°C	repetidos ciclos de 30min
Esterilização com vapor fluente @ 126°C	10 ciclos de 1 hora (cartuchos com insertos)
DIMENSÕES DO CARTUCHO	
Diâmetro Interno	1 3/32" nominal
Diâmetro Externo	2 ½" nominal
Alturas do PolyNet™	9 ¾", 10", 19 ½", 20", 29 ¼", 30", 39" e 40"
Alturas do PolyNet™ PB	2 ½", 5", 10", 20", 30" e 40"

Para fluídos não aquosos utilize as fórmulas abaixo para determinar:

1. Dp inicial para filtros existentes (psi)

$$\frac{\text{Vazão (gpm) x Viscosidade (cP) x Perda de pressão específica (psid / gpm / 1cP)}}{\text{Quantidade de cartuchos de 1 altura}}$$

2. Quantidade de cartuchos de uma altura necessária para novos projetos

$$\frac{\text{Vazão (gpm) x Viscosidade (cP) x Perda de pressão específica (psid / gpm / 1cP)}}{\text{Dp inicial (psi)}}$$

CÓDIGOS DOS CARTUCHOS

Cartucho	Alturas	Grau (mm)	Embalagem	Insertos	Conectores	Vedação
NT PolyNet™	**9 -** 9 ¾” **19 -** 19 ½” **29 -** 29 ¼” **39 -** 39” **10 -** 10” **20 -** 20” **30 -** 30” **40 -** 40”	**T005** –0,5 **T010** – 1 **T020** – 2 **T030** – 3 **T050** – 5 **T100** – 10 **T200** – 20 **T400** – 40 **T500** – 50 **T700** – 70	**S**	**0** nenhum	**N**	**G-**Volara
				0 - Nenhum **1** - Polisulfona **2** - Inox 316	**B** **C** **F**	**A-**Silicone **B-**Viton **C-**EPR **D-**Nitrila
NT PolyNet™ PB	**3 -** 2 ½” **6 -** 5” **10 -** 10” **20 -** 20” **30 -** 30” **40 -** 40”	**P005** – 0,5 **P010** – 1 **P020** – 2 **P030** – 3 **P050** – 5 **P100** – 10 **P200** – 20 **P300** – 30 **P400** – 40 **P500** – 50 **P700** – 70	**Z**	**1 -** Polisulfona **2** - Inox 316	**B** **C** **F** **J**	**A-**Silicone **B-**Viton **C-**EPR **D-**Nitrila

DESENHOS DOS CONECTORRES

N - Aberto dos dois lados (múltiplos de 9 ¾” e 10”)

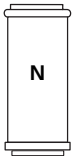

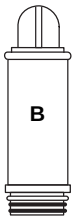

B - Aberto de um lado com duplo O-Ring 226 e Baioneta, e fechado do outro com centralizador (múltiplos de 10”)

C - Aberto de um lado com duplo O-Ring 222 e fechado do outro com centralizador (múltiplos de 10”)

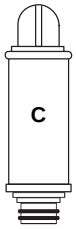

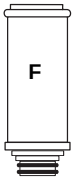

F - Aberto de um lado com duplo O-Ring 222 e fechado do outro com tampa plana (múltiplos de 10”)

J - Aberto de um lado com duplo O-Ring 226 e Baioneta, e fechado do outro com tampa plana (para cartuchos de 2 ½” e 5”)

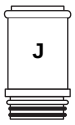

SASS - LABORATÓRIO CIENTÍFICO DE APLICAÇÕES

Exclusivo time de suporte técnico formado por cientistas e engenheiros da CUNO que estão disponíveis para fornecer as específicas recomendações das aplicações e os sistemas de filtração mais eficazes e econômicos. Além dos testes e análises conduzidos no avançado laboratório da CUNO, o pessoal do SASS desenvolve testes nas próprias empresas dos clientes, buscando a melhor solução *in loco*. Contate o distribuidor autorizado CUNO local para maiores informações.

Representante:

Sistema de Qualidade certificado por ABS Quality Evaluations Inc.
ISO 9001
CERTIFICADO Nº 31575

CUNO
Fluid Purification

CUNO Pacific Pty. Ltd.
140 Sunnyholt Road
Blacktown, Ns. W. 2148
Austrália

CUNO Filtration Asia Pte. Ltd.
18 Tuas Link 1
3º Floor
Singapore 638699

CUNO Europe S. A.
Chemin Du Contre Halage
62730 - Les Attaques
France

CUNO K. K.
Hodogaya Station Buiding 6F
1 - 7 Iwai-cho, Hodagaya-ku
Yokohama 240 Japan

CUNO INCORPORATED
400 Research Parkway
Meriden, CT 06450
U.S.A.

CUNO Argentina
Hipolito Yrigoyen, 1530
7º Piso - (CP. 1089)
Capital Federal

CUNO Latina Ltda.
Rua AMF do Brasil, 251 A
Distrito Industrial
18120-000 - Mairinque - SP
Tel.: (011) 7998-8555
Fax: (011) 7998-2777
www.cunolatina.com.br

FILTROS DE CARTUCHOS

MODELO SL

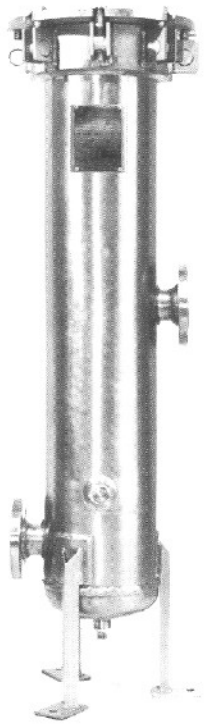

Os filtros modelo SL são projetados de acordo com as normas ASME, secção VIII Div. 1. De estrutura inteiramente metálica, construídos de vários tipos de materiais (aço carbono - ASTM A285Gr.C e aços inoxidáveis - AISI304 e 316), para a operação com fluidos líquidos e gasosos. De acordo com a solicitação, fornecemos documentos de projeto, tais como: certificados de teste hidrostático, matéria prima, qualificação de procedimento de solda, soldadores, etc.

TABELAS DE VAZÕES MÁXIMAS

Filtro Modelo	Diâmetro das Conexões Entrada/Saída	Vazões em m^3/h					
		Água	80 SSU	150 SSU	300 SSU	600 SSU	1000 SSU
3 SL	2"	13	13	10	8	5	4
6 SL	2"	23	23	21	21	17	14
12 SL	3"	52	52	47	42	36	28
19 SL	4"	91	91	82	72	63	54
27 SL	4"	91	91	84	75	68	59
40 SL	6"	182	177	99	141	120	107
55 SL	6"	204	204	182	163	141	125
80 SL	8"	363	318	318	284	250	216

Esta tabela de vazões é utilizada somente como guia para se estabelecer a capacidade do filtro, não devendo ser usada para dimensionamanto. Para determinar o tamanho necessário, calcula-se o número de cartuchos exigidos para atender à vazão nas condições de operação. Quando o número de cartuchos for conhecido e o filtro escolhido, use simplesmente a tabela para garantir que o filtro admita a vazão requerida.

CARACTERÍSTICAS DO PROJETO

- **Projeto ASME:** Os filtros são projetados, construídos e testados de acordo com o código ASME, secção VIII-Div.1
- **Pressão de projeto:** Os modelos standard são projetados para 10,5kg/cm² (150 PSI) ou 21 kg/cm² (300 PSI).
- **Dispositivo para levantar a tampa:** componente padrão em todos os filtros com tampa de peso superior a 18 Kg ou mais (modelo 12 SL e maiores), provido também de alça para içamento.
- **Parafusos basculantes:** facilitam a remoção da tampa e impedem a perda e colocação errada de parafusos.
- **Gaxeta da tampa:** elimina o torque crítico de parafusos para fixar a tampa ao corpo.
- **Postes triangulares removíveis:** Guia a colocação do cartucho.
- **Versatilidade do projeto:** linha completa de tamanhos e modelos para satisfazer quaisquer exigências de aplicação. Permite a ultilização de uma ampla gama de elementos filtrantes.

TROCA DOS CARTUCHOS

Os cartuchos filtrantes podem ser facilmente substituídos removendo-se a tampa superior. Os postes triangulares possibilitarão a remoção de todos os cartuchos.

FILTROS MODELO SL

DIMENSÕES

FILTRO	A	B	C	D	E	F	G	H	J	K	L	M	N	P	Q
3SL1	1090	--	820	592	210	285	470	381	162	20	70	90	400	16	--
3SL2	1585	--	1070	715	210	285	470	381	162	20	70	90	400	16	--
3SL3	2080	--	1320	840	210	285	470	381	162	20	70	90	400	16	--
3SL4	2575	--	1570	965	210	285	470	381	162	20	70	90	400	16	--
6SL2	1585	--	1085	730	254	295	483	392	188	25	75	100	450	16	--
6SL3	2090	--	1335	855	254	295	483	392	188	25	75	100	450	16	--
6SL4	2585	--	1585	980	254	295	483	392	188	25	75	100	450	16	--
12SL2	1680	1432	1157	795	330	310	548	425	235	25	90	110	520	16	443
12SL3	2155	1682	1407	920	330	310	548	425	235	25	90	110	520	16	443
12SL4	2650	1932	1657	1045	330	310	548	425	235	25	90	110	520	16	443
19SL3	2205	1765	1460	970	410	200	595	445	280	25	90	110	600	16	523
19SL4	2700	2015	1710	1095	410	200	595	445	280	25	90	110	600	16	523
27SL3	2210	1962	1474	978	485	200	604	485	320	25	110	120	770	16	613
27SL4	2705	2202	1724	1103	485	200	604	485	320	25	110	120	770	16	613
40SL3	2300	1952	1572	1055	590	200	691	530	610	25	130	135	850	16	730
40SL4	2795	2202	1822	1180	590	200	691	530	610	25	130	135	850	16	730
55SL3	2400	1960	1603	1140	710	250	715	610	610	35	170	170	1000	22	870
55SL4	2895	2210	1853	1265	710	250	715	610	610	35	170	170	1000	22	870
80SL3	2600	2224	1824	1350	800	250	942	285	680	35	170	170	1100	22	940
80SL4	3095	2474	2074	1475	800	250	942	285	680	35	170	170	1100	22	940

As dimensões acima indicam o tamanho do filtro para a pressão de 10,5 e 21 kgf/cm².
Tratando-se de instalação crítica, solicite um desenho do modelo desejado.

OBS: Modelos especiais: 100 SL e 200 SL

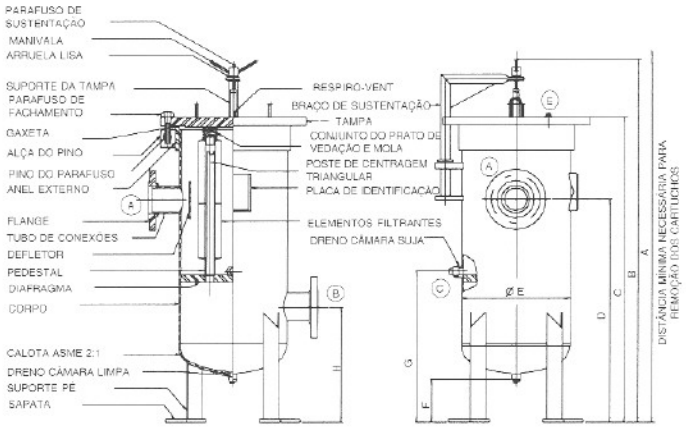

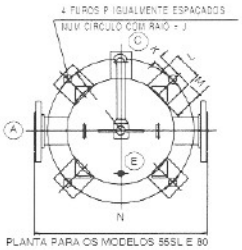

PLANTA PARA OS MODELOS 55SL E 80 SL

PLANTA PARA OS MODELOS 3SL, 6SL, 12SL, 19SL, 27SL E 40SL.
OS MODELOS 3SL E 6SL NÃO UTILIZAM BRAÇO DE SUSPENSÃO DA TAMPA.

TABELA DE CONEXÕES

Filtro Modelo	A Entrada	B Saída	C Dreno Sujo	D Dreno Limpo	E Respiro
3SL	2"SO-RF		1"NPT	3/4"NPT	3/4"NPT
6SL	2"SO-RF		1"NPT	3/4"NPT	3/4"NPT
12SL	3"SO-RF		1"NPT	3/4"NPT	3/4"NPT
19SL	4"SO-RF		1"NPT	3/4"NPT	3/4"NPT
27SL	4"SO-RF		1"NPT	3/4"NPT	3/4"NPT
40SL	6"SO-RF		1"NPT	1"NPT	3/4"NPT
55SL	6"SO-RF		1"NPT	1"NPT	3/4"NPT
80SL	8"SO-RF		2"NPT	1"NPT	3/4"NPT

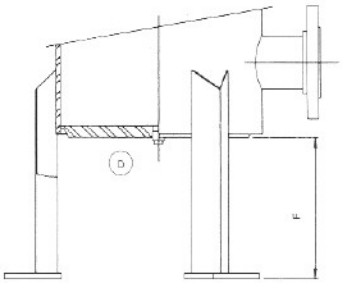

Detalhe do fundo plano
Filtros 3SL, 6SL e 12 SL

RAIO MÍNIMO NECESSÁRIO PARA ABERTURA DA TAMPA

SASS - LABORATÓRIO CIENTÍFICO DE APLICAÇÕES

A base da filosofia da CUNO é o serviço a clientes, não somente em relação à qualidade dos produtos e pronta entrega, mas principalmente na solução de problemas, consultoria de aplicações e intercâmbio de informações científicas. O SASS - Laboratório Científico de Aplicações da CUNO é formado por um grupo de cientistas e engenheiros dedicados a trabalhar em conjunto com os clientes na solução dos difíceis problemas de separação e auxiliar na seleção dos sistemas mais eficientes e econômicos. O SASS constitui-se no vínculo vital entre a CUNO e os usuários dos sistemas filtrantes CUNO. Os especialistas do SASS estão capacitados para executar uma grande gama de ensaios e testes em escala de laboratório, fazendo a correspondente extrapolação à escala industrial.

Nosso Distribuidor Local:

Sistema de Qualidade certificado por ABS Quality Evaluations Inc.

ISO 9001

CERTIFICADO Nº 31575

CUNO

Fluid Purification

CUNO Pacific
140 Sunnyholt Road
Blacktown N.S.W. 2148
Austrália

CUNO Asia
18 Tuas Link 1
3° Floor
Singapore 638599

CUNO Europe
Chemin Du Contre Halage
62730 - Les Ataques
France

CUNO K. K.
Hodogawa Station Building 6F
1-7 Iwai-cho, Hodogawa-Ku
Yokohama 240 Japan

CUNO Inc.
400 Research Parkway
Meriden, CT 06450
U. S. A.

CUNO Argentina
Hipolito Yrigoyen 1530
7o. Piso - (CP 1089)
Capital Federal
Argentina

CUNO Latina Ltda.
R. AMF do Brasil, 251
18120-000 - Mairinque - SP
Tel.: (11) 4718-8555
Fax.: (11) 4718-2777

3. OSMOSE REVERSA – BOMBA DE ALTA PRESSÃO

NATIONAL OILWELL

Multiplex Plunger Pumps

Installation, Care and Operations Manual

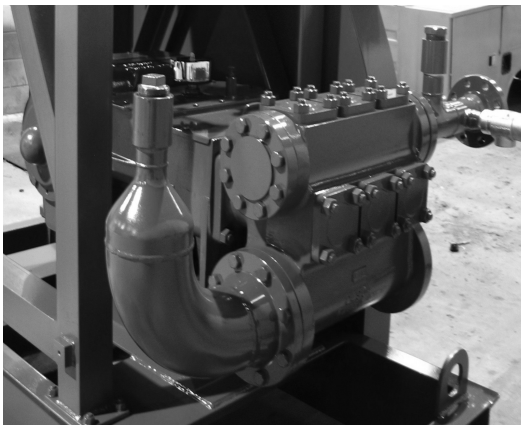

110Q-3LS

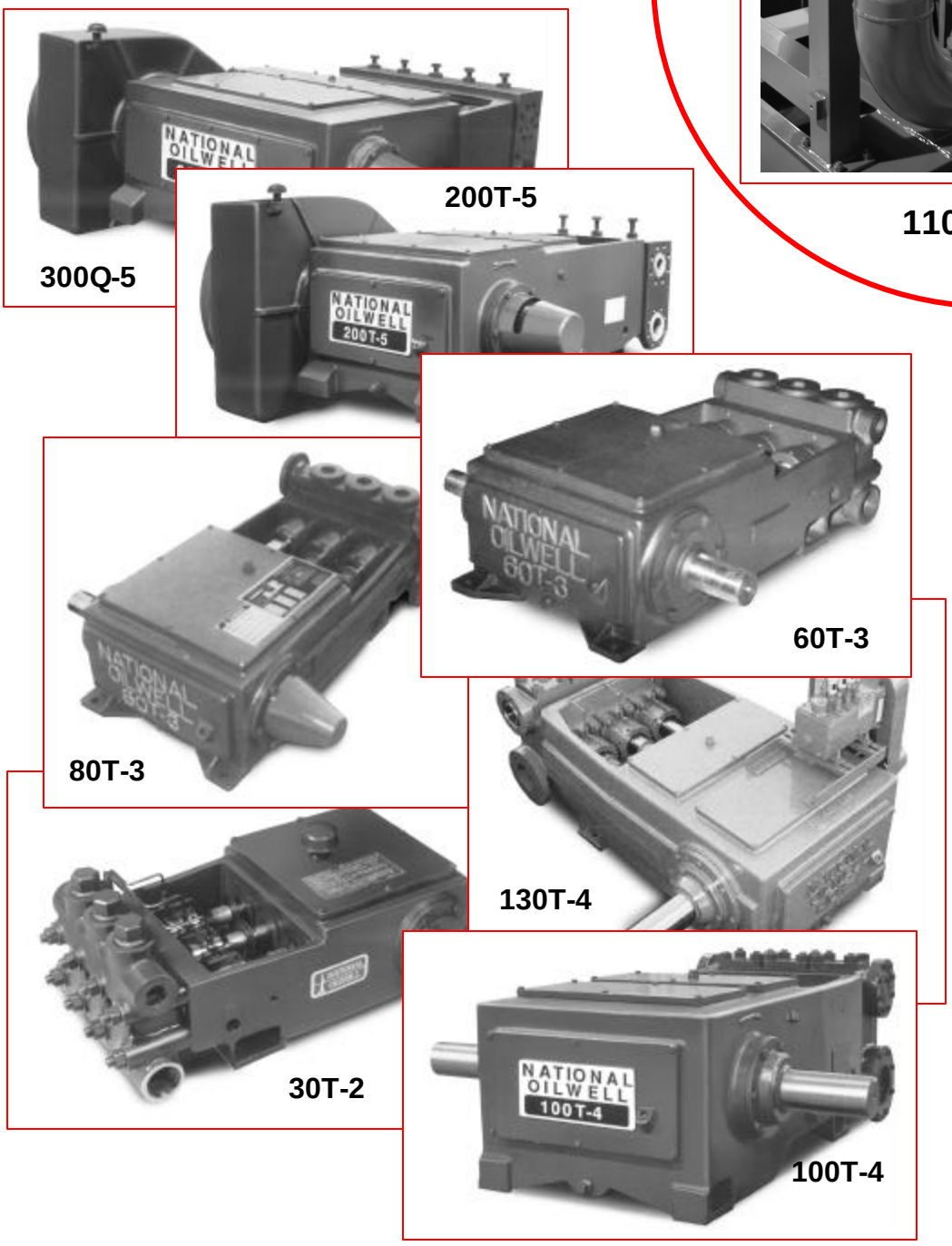

300Q-5

200T-5

80T-3

60T-3

130T-4

30T-2

100T-4

Covering the Following pump:

110Q-3LS

NOI Order No: 406425

TSG Technologies P.O. #101581

Pump Serial No: 54671, 54672, 54673, 54674, 54675

Sales / Technical Information

Phone: 1 (918) 447-4600
Fax: 1 (918) 447-4670
Internet: http://www.natoil.com

ISSUE: February 2005

P.O. Box 4638 **Houston, Texas 77210-4638**

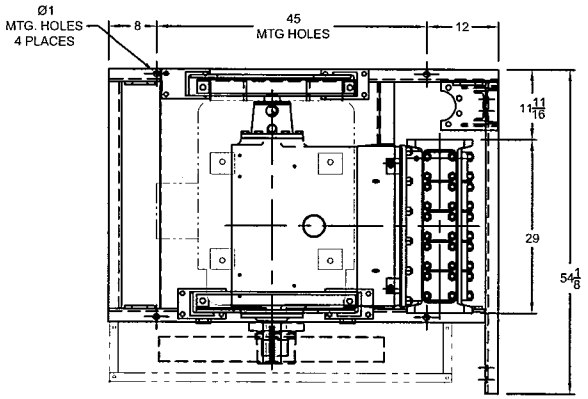

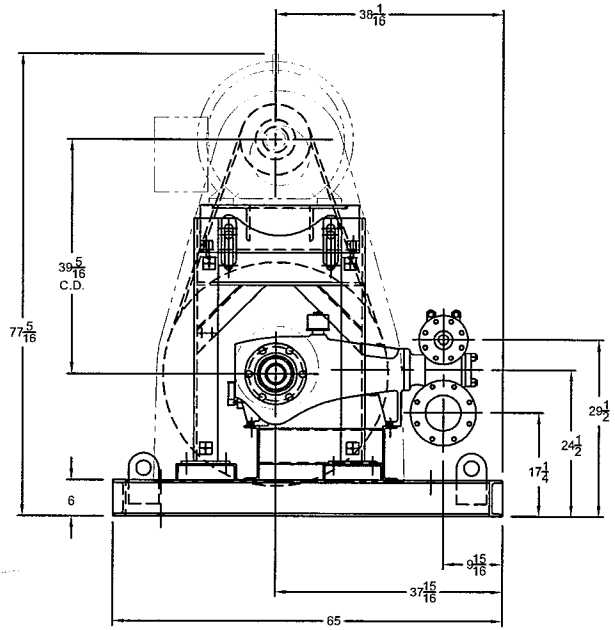

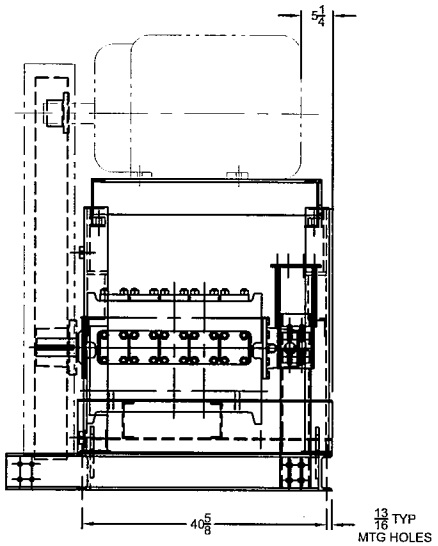

ELECTRIC MOTOR SPECIFICATION

TO BE SUPPLIED BY CUSTOMER
(MODELED WITH 445T, 125HP MOTOR)

DRIVE SPECIFICATIONS

SMALL SHEAVE:	11.8 O.D., 6 GROOVE, 5V SECTION HUB: E, BORE: 3.375, KEY WAY: 7/8 x 1/16
LARGE SHEAVE:	37.5 O.D., 6 GROOVE, 5V SECTION HUB: J, BORE: 3.000, KEY WAY: 3/4 x 3/8
V-BELTS:	(6) 5VX-1600
RATIO:	3.18 : 1
C.D.:	39.3
ESTIMATED WEIGHT:	5200 LBS. (WITH 445T, 125HP MOTOR)

SKID DWG.: D117845
GUARD DWG.: SUPPLIED BY CUSTOMER
PUMP BASE: D117846
MOTOR BASE DWG.: D117848
MOTOR STAND DWG.: D117847

DRN. BY: FLJ	DATE: [illegible]	UNLESS OTHERWISE SPECIFIED ALL DIMENSIONS ARE IN INCHES	
CHK. BY: RAK	DATE: [illegible]	NO DEVIATION TO THIS DRAWING IS PERMITTED WITHOUT WRITTEN APPROVAL FROM NATIONAL OILWELL	
APP'D BY: RAK	DATE: [illegible]		

REV	PCN	DATE	DESCRIPTION	DRN	CHK
A	MAC	[illegible]	INITIAL RELEASE	FLJ	RAK

- DO NOT SCALE DRAWING -

MACHINE TOLERANCE

BREAK SHARP CORNERS .03 ± .01
FRACTIONS = ± 3/16
DECIMALS .X = ± .1
DECIMALS .XX = ± .015
DECIMALS .XXX = ± .005
ANGLES ± 5°
MACHINED SURFACES RMS 125 ✓
CONCENTRICITY WITHIN TIR .005

NATIONAL OILWELL

TITLE:
PUMP UNIT, RH DRIVE
ELECTRIC MOTOR
TMM, V-BELT DRIVE
MODEL: 110Q-3

SCALE:	DWG No.:	REV:	SHT 1 OF 1
1:8	D117970	A	

BILL OF MATERIAL

PART NO: 6QJ-271315-429 110Q-3LS RH 2-7/8 CDPX SPH
SERIAL NUMBER: 54671 FE 54333
SALES ORDER: 406425

PART NUMBER	DESCRIPTION	ST UM	QUANTITY REQUIRED
001-007953-302	BUSHING	EA	5
001-007954-236	WRIST PIN	EA	5
001-007963-237	WIPER BOX, HP125	EA	5
001-007968-350	GLAND,WIPER BOX,HP125	EA	5
001-007986-201	BAFFLE DISC	EA	5
001-010803-999	GAUGE, OIL LEVEL SITE	EA	1
001-011122-999	OIL PUMP BUSHING (PFS)	EA	1
001-011251-204	GASKET	EA	1
001-011253-231	CRANKCASE COVER	EA	1
001-011286-206	SHIM GASKET 1/64" (PFS)	EA	2
001-011288-206	SHIM GASKET 1/32" (PFS)	EA	6
001-011289-999	SHIM GASKET .005 (PFS)	EA	4
001-011298-231	CRADLE COVER,HP125/3115	EA	1
001-011677-999	SHIM, CONN. ROD (PFS)	EA	10
001-012157-999	LUBE PUMP, TUTHILL	EA	1
001-014240-220	PIN	EA	1
001-014241-363	SPRING, LUBE PUMP	EA	1
001-014242-271	PRESSURE ADJST SCREW	EA	1
001-014243-271	CAP	EA	1
001-014244-278	BODY, RELIEF VALVE	EA	1
001-014251-206	WASHER	EA	2
001-016981-237	PLUG, O-RING	EA	1
002-001292-999	SHELL BEARING,STD SIZE	EA	5
002-007957-350	CROSSHEAD,P300/HP125	EA	5
002-010516-999	MAIN BEARING,STD SIZE	EA	2
002-011283-350	BRG HSG,SHAFT,HP125	EA	1
002-016950-220	LUBE OIL FILTER	EA	1
002-017850-351	SPANNER WRENCH	EA	1
002-028529-999	PLGR,27,CER	EA	5
008-011160-356	PF,HP125,MACH	EA	1
008-011333-348	CRANKSHAFT,HP125	EA	1
008-015833-350	BRG HSG,LUBE SIDE,HP125	EA	1
030-011253-231	PLATE, COVER	EA	1
100-012234-290	CAP SCREW CFS	EA	10
100-038034-290	CAP SCREW CFS	EA	16
100-058112-290	CAP SCREW CFS	EA	12
102-034212-287	STUD,IMF3W-TE COATED	EA	12
102-034300-287	STUD,IMF3W-TE COATED	EA	40
102-038134-286	STUD, ZINC PLTD	EA	10
104-038100-286	STUD, ALL THD, ZINC PLTD (PFS)	EA	2
110-000210-201	O-RING PLT1	EA	1

110-000238-201	O-RING (PFS)	EA	5
110-000264-201	O-RING (CFS)	EA	2
110-000342-200	O-RING	EA	10
126-006516-405	DRIVE SCREW, #6 X 5/16" (PFS)	EA	12
130-078014-243	NUT, JAM	EA	1
133-034010-287	NUT,IMF3W-TE COATED	EA	52
145-158238-999	OIL SEAL	EA	15
145-318418-999	OIL SEAL	EA	1
146-034500-236	KEY	EA	1
147-038034-220	DOWEL PIN	EA	2
147-038112-220	DOWEL PIN	EA	1
149-038034-406	ROLL PIN	EA	5
150-038016-306	NUT, FLEXLOC (CFS)	EA	10
154-012087-220	LOCK WASHER (CFS)	EA	10
170-012005-353	PIPE PLUG, SQ HD, CI (CFS)	EA	1
170-014003-220	PIPE PLUG (CFS)	EA	4
170-018002-278	PIPE PLUG	EA	5
170-018003-220	PIPE PLUG (PFS)	EA	5
170-034003-220	PIPE PLUG (CFS)	EA	2
170-114003-220	PIPE PLUG (CFS)	EA	1
1793025	SPRING,OUTER-3" PLGR PUMP	EA	10
1793026	SPRING,INNER-3" PLGR PUMP	EA	10
179302725	VALVE, SPHER-3" PLGR PUMP	EA	10
179303625W	SPHERICAL VALVE COMPLETE W/WR	EA	10
179303725	SEAT, 3" WHEATLEY HP100L	EA	10
187-038016-286	WING NUT (PFS)	EA	2
202-000010-999	BEARING CUP	EA	2
203-000010-999	BEARING CONE {CONE & CUP:	EA	2
227-014018-405	PIPE BUSHING, HEX	EA	1
241-038114-273	SET SCREW	EA	2
429-278256-342	PKG SET,STYLE 1068-4 SS ADPTRS	EA	5
469-080202-305	ADAPTER, 1/8" FNPT X 1/8" MNPT	EA	1
9707082	WAVE RING, 3" SPHERICAL VALVE	EA	10
998-812500-005	ROD ASSY,W/BRZ BSHG,HP125	EA	5
AAA-030205-999	MURPHY A25PE-OS-100-SF15	EA	1
AAB-029711-E16	GLD NUT,SS,W/XYLAN 2.75"-3.00"	EA	5
AAB-115716-405	NAME PLATE,WG,STD	EA	2
AAC-115855-594	VALVE COVER,HP125AL	EA	10
AAD-115856-594	LE,HP125AL CDPX BLTD CVR	EA	1
ABB-113766-000	BREATHER,1-1/2" NPT,CHROME	EA	1
ABC-030416-278	THROAT BSHG,2734	EA	10

110Q-3 Quintuplex Plunger Pump

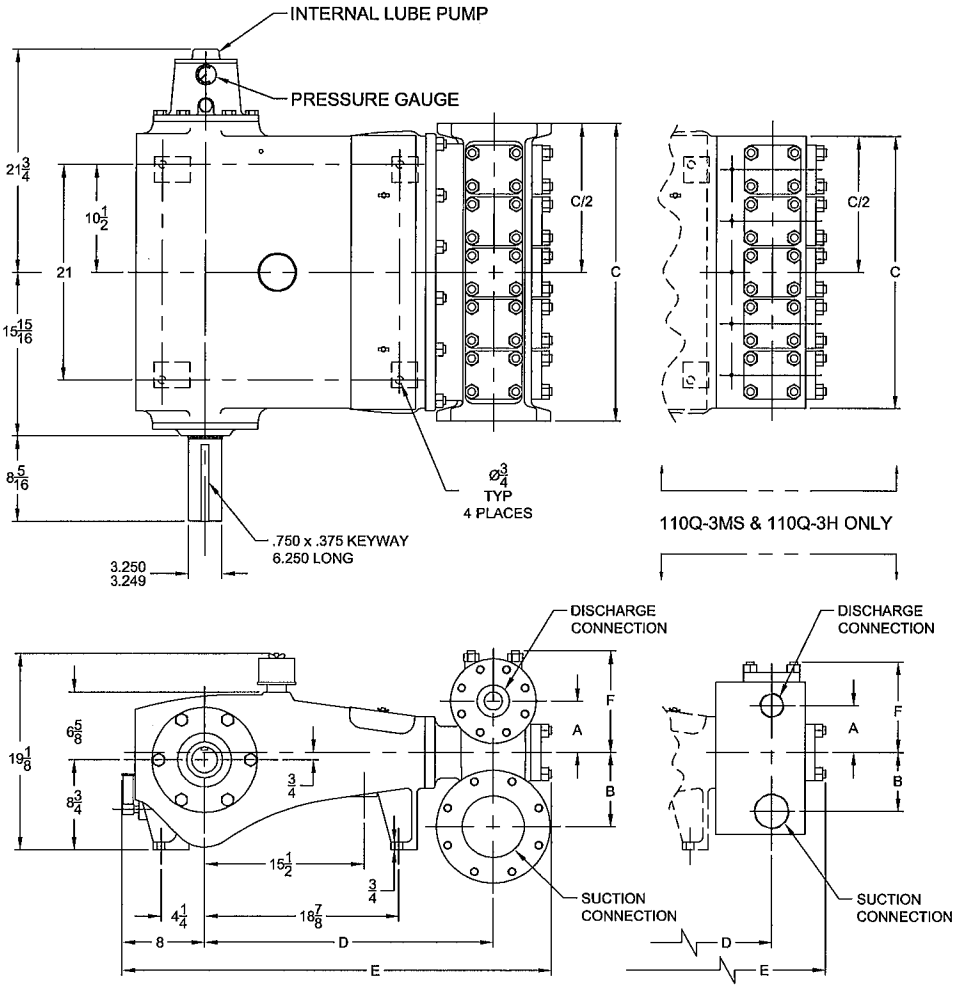

Specifications

Pump Size:
maximum plunger size x stroke length, in.(mm):
3.000 x 3.500 (76.2 x 88.9)
Rated BHP (kW) at 440 RPM: 110 (82)
Rated plunger load, pounds (kg): 5090 (2309)
Maximum discharge pressure: psi (kPa)
"L" model: 1037 (7149)
"M" model: 2454 (16922)
"MS" model: 5121 (35306)
"H" model: 10000 (68948)
Crankshaft extension:
Diameter, in.(mm): 3.250 (82.55)
Length, in.(mm): 8.31 (211.1)
Keyway width x depth, in.(mm):
3/4 x 3/8 (19.05 x 9.525)
Maximum recommended sheave diameter, in.(mm): 38 (965.2)
For larger sizes: **Contact Factory**
Pinion shaft extension,
if gear reducer is supplied, in.(mm)
For belt or chain drive: **Contact Factory**
For direct drive: Diameter: 2.000 (50.8)
Length: 4.250 (108.0)
Keyway width x depth:
1/2 x 1/4 (12.70 x 6.35)
Accessory gear reduction unit:
3.00:1, 3.12:1, 3.23:1, 3.36:1, 3.49:1, 3.62:1, 3.78:1,3.94:1, 4.11:1, 4.29:1, 4.48:1, 4.69:1, 4.93:1, 5.17:1
Oil Capacity, gallons (L)
Crankcase: 5 (18.93)
Gear Reducer - varies with ratio:
1.25 to 1.50 (4.73 to 5.68)
Weight, pump only on
wood shipping skids, pounds (kg)
"L" model: 1670 (757)
"M" model: 1500 (680)
"MS" model: 1650 (748)
"H" model: 1750 (794)
Standard Materials for Fluid Ends:
"L" model
Cast Ductile Iron
Cast Nickel-Aluminum-Bronze
Cast Duplex Stainless Steel
Cast/Forged/Plate Carbon Steel
"M" model
Cast Ductile Iron
Cast Nickel-Aluminum-Bronze
Cast Duplex Stainless Steel
Cast/Forged/Plate Carbon Steel
"MS" model
Forged Nickel-Aluminum-Bronze
Forged 15-5 Stainless Steel
Cast/Forged/Plate Carbon Steel
"H" model
Forged Carbon Steel
Forged 15-5 Stainless Steel

Pump Model	Flange Connections		Dimensions (Inches)					
	Discharge Connection Sizes	Suction Connection Sizes	A	B	C	D	E	F
110Q-3L	3 (76.2)-ANSI 600 FF	6 (152.4)-ANSI 150 FF	5	7 1/4	29	28	41 5/8	9 7/8
110Q-3M	2 (50.8)-ANSI 1500 FF	3 (76.2)-ANSI 300 FF	3 7/16	5 3/4	30	27 3/16	40 7/8	8 1/8
110Q-3MS	2 (50.8)-11 1/2 NPT	3 (76.2)-8 NPT	4 9/16	5 3/4	26 1/2	26 7/8	40 1/8	8 7/8
110Q-3H	1 (25.4)-11 1/2 NPT	1 1/2 (38.1)-11 1/2 NPT	3 7/8	4 3/8	28	25 3/4	39 7/8	7 3/4

110Q-3 Quintuplex Plunger Pump

Performance Data

PUMP	English Units					100 * RPM		200 RPM		250 RPM		300 RPM		350 RPM		440 RPM	
	Plunger Dia. In.	Plunger Area Sq. In.	BPD per RPM	GPM per RPM	Max. Press. PSI	BPD	GPM	BPD	GPM	BPD	GPM	BPD	GPM	BPD	GPM	BPD	GPM
110Q-3L	3.000	7.0686	18.3599	0.5355	720	1836	53.5	3672	107.1	4590	133.9	5508	160.6	6426	187.4	8079	235.6
(HP125AL)	2.875	6.4918	16.8618	0.4918	784	1687	49.2	3373	98.4	4216	123.0	5059	147.5	5902	172.1	7420	216.4
	2.750	5.9396	15.4274	0.4500	857	1543	45.0	3086	90.0	3857	112.5	4629	135.0	5400	157.5	6789	198.0
	2.625	5.4119	14.0568	0.4100	941	1406	41.0	2812	82.0	3515	102.5	4218	123.0	4920	143.5	6186	180.4
	2.500	4.9087	12.7500	0.3719	1037	1275	37.2	2550	74.4	3188	93.0	3825	111.6	4463	130.2	5610	163.6
110Q-3M	2.500	4.9087	12.7500	0.3719	1037	1275	37.2	2550	74.4	3188	93.0	3825	111.6	4463	130.2	5610	163.6
(HP125AM)	2.375	4.4301	11.5068	0.3356	1149	1151	33.6	2302	67.1	2877	83.9	3453	100.7	4028	117.5	5064	147.7
	2.250	3.9761	10.3275	0.3012	1280	1033	30.1	2066	60.2	2582	75.3	3099	90.4	3615	105.4	4545	132.5
	2.125	3.5466	9.2118	0.2687	1435	922	26.9	1843	53.7	2303	67.2	2764	80.6	3225	94.0	4054	118.2
	2.000	3.1416	8.1600	0.2380	1620	816	23.8	1632	47.6	2040	59.5	2448	71.4	2856	83.3	3591	104.7
	1.875	2.7612	7.1718	0.2092	1843	718	20.9	1435	41.8	1793	52.3	2152	62.8	2511	73.2	3156	92.0
	1.750	2.4053	6.2475	0.1822	2116	625	18.2	1250	36.4	1562	45.6	1875	54.7	2187	63.8	2749	80.2
	1.625	2.0739	5.3869	0.1571	2454	539	15.7	1078	31.4	1347	39.3	1617	47.1	1886	55.0	2371	69.1
110Q-3MS	1.500	1.7671	4.5900	0.1339	2880	459	13.4	918	26.8	1148	33.5	1377	40.2	1607	46.9	2020	58.9
(HP125MS)	1.375	1.4849	3.8569	0.1125	3428	386	11.2	772	22.5	965	28.1	1158	33.7	1350	39.4	1698	49.5
	1.250	1.2272	3.1875	0.0930	4148	319	9.3	638	18.6	797	23.2	957	27.9	1116	32.5	1403	40.9
	1.125	0.9940	2.5819	0.0753	5121	259	7.5	517	15.1	646	18.8	775	22.6	904	26.4	1137	33.1
110Q-H	1.000	0.7854	2.0400	0.0595	6481	204	5.9	408	11.9	510	14.9	612	17.8	714	20.8	898	26.2
(HP125H)	0.875	0.6013	1.5619	0.0456	8465	157	4.6	313	9.1	391	11.4	469	13.7	547	15.9	688	20.0
	0.750	0.4418	1.1475	0.0335	10000	115	3.3	230	6.7	287	8.4	345	10.0	402	11.7	505	14.7
	Brake Horsepower Required					25		50		63		75		87		110	

PUMP	Metric Units					100 * RPM		200 RPM		250 RPM		300 RPM		350 RPM		440 RPM	
	Plunger Dia. mm	Plunger Area cm²	M³/Hr per RPM	L/Sec. per RPM	Max. Press. kPa	M³/Hr	L/Sec.	M³/Hr	L/Sec.	M³/Hr	L/Sec.	M³/Hr	L/Sec.	M³/Hr	L/Sec.	M³/Hr	L/Sec.
110Q-3L	76	45.604	0.1216	0.0338	4965	12.2	3.4	24.3	6.8	30.4	8.4	36.5	10.1	42.6	11.8	53.5	14.9
(HP125AL)	73	41.883	0.1117	0.0310	5406	11.2	3.1	22.3	6.2	27.9	7.8	33.5	9.3	39.1	10.9	49.1	13.7
	70	38.320	0.1022	0.0284	5909	10.2	2.8	20.4	5.7	25.5	7.1	30.7	8.5	35.8	9.9	45.0	12.5
	67	34.915	0.0931	0.0259	6485	9.3	2.6	18.6	5.2	23.3	6.5	27.9	7.8	32.6	9.1	41.0	11.4
	64	31.669	0.0845	0.0235	7149	8.4	2.3	16.9	4.7	21.1	5.9	25.3	7.0	29.6	8.2	37.2	10.3
110Q-3M	64	31.669	0.0845	0.0235	7149	8.4	2.3	16.9	4.7	21.1	5.9	25.3	7.0	29.6	8.2	37.2	10.3
(HP125AM)	60	28.581	0.0762	0.0212	7922	7.6	2.1	15.2	4.2	19.1	5.3	22.9	6.4	26.7	7.4	33.5	9.3
	57	25.652	0.0684	0.0190	8826	6.8	1.9	13.7	3.8	17.1	4.8	20.5	5.7	23.9	6.7	30.1	8.4
	54	22.881	0.0610	0.0170	9895	6.1	1.7	12.2	3.4	15.3	4.2	18.3	5.1	21.4	5.9	26.8	7.5
	51	20.268	0.0540	0.0150	11171	5.4	1.5	10.8	3.0	13.5	3.8	16.2	4.5	18.9	5.3	23.8	6.6
	48	17.814	0.0475	0.0132	12710	4.8	1.3	9.5	2.6	11.9	3.3	14.3	4.0	16.6	4.6	20.9	5.8
	44	15.518	0.0414	0.0115	14591	4.1	1.1	8.3	2.3	10.3	2.9	12.4	3.4	14.5	4.0	18.2	5.1
	41	13.380	0.0357	0.0099	16922	3.6	1.0	7.1	2.0	8.9	2.5	10.7	3.0	12.5	3.5	15.7	4.4
110Q-3MS	38	11.401	0.0304	0.0084	19859	3.0	0.8	6.1	1.7	7.6	2.1	9.1	2.5	10.6	3.0	13.4	3.7
(HP125MS)	35	9.580	0.0255	0.0071	23634	2.6	0.7	5.1	1.4	6.4	1.8	7.7	2.1	8.9	2.5	11.2	3.1
	32	7.917	0.0211	0.0059	28598	2.1	0.6	4.2	1.2	5.3	1.5	6.3	1.8	7.4	2.1	9.3	2.6
	29	6.413	0.0171	0.0048	35306	1.7	0.5	3.4	1.0	4.3	1.2	5.1	1.4	6.0	1.7	7.5	2.1
110Q-H	25	5.067	0.0135	0.0038	44684	1.4	0.4	2.7	0.8	3.4	0.9	4.1	1.1	4.7	1.3	5.9	1.7
(HP125H)	22	3.879	0.0103	0.0029	58362	1.0	0.3	2.1	0.6	2.6	0.7	3.1	0.9	3.6	1.0	4.6	1.3
	19	2.850	0.0076	0.0021	68948	0.8	0.2	1.5	0.4	1.9	0.5	2.3	0.6	2.7	0.7	3.3	0.9
	Kilowatts Required					19		37		47		56		65		82	

Volumetric Rate is based on 100% Volumetric Efficiency. Brake Horsepower/Kilowatts Required is based on 90% Mechanical Efficiency. *Operation below 150 RPM requires an "optional" externally-mounted auxillary lubrication system.

Authorized Distributor:

NATIONAL OILWELL

www.natoil.com / customer.service@natoil.com
10000 Richmond, Houston, Texas 77042
(713)346-7500 (phone) • (713)346-7366 (fax)

National Oilwell

Inspection Data Book

Client:	TSG Technologies
Client Contract/P.O.:	101581
Equipment Description:	Multiplex Pumps
Model Number:	110Q-3LS
Client Serial/Tag Number:	N/A
National Oilwell Job No.:	T490950
National Oilwell S.O. No.:	406425
National Oilwell Serial No.:	54671

National Oilwell

Quality Assurance

Final Inspections/Test Report

Number: 406425 Date: December 8, 2004

The below listed equipment has successfully completed all required inspections and tests and is hereby released for:

_____Customer/Third Party Acceptance
_____Inspections/Tests
__✓__Packaging Preservation and Shipment

Comments: N/A

Client:	TSG Technologies
Equipment:	National Oilwell Multiplex Pumps
Equipment Serial No:	54671

Felicia Miller

Multiplex Tulsa Representative

National Oilwell

Manufactures Certificate of Authenticity And Quality Control

Date: December 8, 2004

It is hereby certified that the products identified hereon are genuine National Oilwell Products manufactured in the United States of America conforming to all National Oilwell Quality Standards.

It is further certified that the products are in complete compliance with the applicable product engineerings, Technical specifications, material specifications and product regulatory codes and standards, and that all regulations Regarding the use of asbestos, mercury, radium and alpha contamination have been observed during manufacturing.

National Oilwell Sales Order Number: **406425**
Customer: **TSG Technologies**
Customer P.O.: **101581**

Felicia Miller
National-Oilwell Representative

National Oilwell

Certificate of Conformance

Date: December 8, 2004

It is hereby certified that the products identified herein conform to the applicable engineering drawings and specifications. Raw materials used in the manufacture of these products are in compliance with the specifications. It is further certified that all requirements regarding asbestos, mercury, radium and alpha contamination have been observed. Objective quality evidence supporting this certification is on file at National Oilwell, Tulsa, and available for verification.

Client	TSG Technologies	Client Purchase Order:	101581
National Oilwell S.O.:	406425	National Oilwell Job Number:	T490950
Equipment Type:	National Multiplex Pumps	Equipment Size:	110Q-3LS
Equipment Serial No:	54671		

Felicia Miller

Multiplex Tulsa Representative

National Oilwell

Certificate of Hydrostatic Testing

Date: December 8, 2004

It is hereby certified that the equipment identified hereon has been hydrostatic tested by competent authority in accordance with approved National Oilwell procedures and the test results as presented herein are true and accurate in all respects.

Client:	TSG Technologies	Client Purchase Order:	101581
National Oilwell SO:	406425	National Oilwell Job No.:	T490950A
Equipment Type:	National Multiplex Pump	Equipment Size:	110Q-3LS
Pump Serial No.:	54671	Fluid End Serial No.:	54333

Hydrostatic Test No:
F.E.: 54333

Test Medium: Water
Duration: 30 Minutes
Hydrostatic Test Pressure: 425 psig suction
1920 psig discharge

Test Liquid Temp.: 70° F
Test Witnessed By: N/A

CLIENT ITEM/TAG NO: N/A
TEST RESULTS: No detectable leaks or seepage.
TEST LOCATION: National Oilwell - Tulsa, Oklahoma
TEST DATE: 11-16-04

Felicia Miller
Multiplex Tulsa Representative

#1

NATIONAL OILWELL

T490950 Multiplex Works Pump History / Check Sheet

Job No. T490951 Part No. 6QJ-271315-429 550-122001-000 Date 11/03/04 10-21-04

Serial No. 54671 Pump Model HP125 / 1100-3LS EQR No. H06425-2

Tested to Standard: SEP 6.5.8
(i.e., S.E.P., PS, etc.)

					N/A	CK	By
Crank Shaft End Play:						✓	RB
Shims Used Right Side:	Gasket		Shim	✓		✓	
Shims Used Left Side:	Gasket		Shim	✓		✓	
Conn Rod Bearings							
Side Clearance:					✓	✓	RB
Rod Bolt Torque:	45	159	318	Other: 55		✓	
Pinion Shaft End Play:					✓		
Shims Used Right Side:					✓		
Shims Used Left Side:					✓		
Gear Ratio:					✓		
Gear & Pinion Blue Pattern:					✓		
General Check for Proper Condition							
Crankshaft Oil Holes: Clean & No Burrs						✓	RB
Internal Oil Pump Drive Alignment:					✓		
Adjust Crankshaft Oil Scrapers					✓		
Lube Oiliness: Fittings Tight & Lines Clean					✓		
Clean & Flush Sump:					✓		
After Assembly Inspection							
Lubricator: Check Drive Fittings & Lines					✓		RB
Aux. Equipment: Guards etc. Properly Mounted					✓		
General External and Internal Condition:						✓	

FLUID END INFORMATION RECORD

1	Assembly Person: NP				Date: 11/01/04		
2	Quintiplex ✓	Triplex		Monoblock			
3	Fluid End Material	Al-Brz	Steel	S.S. ✓	Cast Iron		Other
4	Fluid End Serial Number: 54333			Hydro Tested by: AB			
5	Suction Pressure: 425 psig			Discharge Pressure: 1920 psig			
6	Valve Type	Plate	Cage	Ball	Spherical ✓	Wing	Disc	Other
7	Plungers and Packing Installed by: NP						
8	Fluid End Heat/Code Identification Number(s): X 470						

TEST RECORD

1	Date of Test: 11/3/04	Test Spec. No.: SEP 6.5.8		Tested by: 11/03/04		
2	Fluid End Pressure (psi): 788					
	R.P.M.: 424					
3	Plunger Diameter: 2 7/8"		Duration of Test: 75 min.			
4	Oil Pressure at Test: 50#	Observed Crosshead Lube During Test: —				
5	Crank Bearings Normal Temp. ✓		Pinion Bearings Normal Temp. NA			
6	Rust Preventive Treatment Applied:		Yes ✓	RB	No	
7	Identification Numbers Clearly Visible:		Yes ✓	No	By: NP	
8	Power End Acceptance by: CH				Date: 11/03/04	
	Paint Inspection and Acceptance by: RB				Date: 11/16/04	
	Prior to Shipment Pictures, If possible. By: EGT/DR Rieser				Date: 11/17/04	
	Final Inspection and Acceptance by: M D Bacon				Date: 11/16/04	

Note: All Lines Must be Filled Out. If Not Applicable Use (N/A)

National Oilwell

Inspection Data Book

Client:	TSG Technologies
Client Contract/P.O.:	101581
Equipment Description:	Multiplex Pumps
Model Number:	110Q-3LS
Client Serial/Tag Number:	N/A
National Oilwell Job No.:	T490950
National Oilwell S.O. No.:	406425
National Oilwell Serial No.:	54672

National Oilwell

Quality Assurance

Final Inspections/Test Report

Number: 406425 Date: December 8, 2004

The below listed equipment has successfully completed all required inspections and tests and is hereby released for:

_____Customer/Third Party Acceptance
_____Inspections/Tests
___✓___Packaging Preservation and Shipment

Comments: N/A

Client:	TSG Technologies
Equipment:	National Oilwell Multiplex Pumps
Equipment Serial No:	54672

Felicia Miller

Multiplex Tulsa Representative

National Oilwell

Manufactures Certificate of Authenticity And Quality Control

Date: December 8, 2004

It is hereby certified that the products identified hereon are genuine National Oilwell Products manufactured in the United States of America conforming to all National Oilwell Quality Standards.

It is further certified that the products are in complete compliance with the applicable product engineerings, Technical specifications, material specifications and product regulatory codes and standards, and that all regulations Regarding the use of asbestos, mercury, radium and alpha contamination have been observed during manufacturing.

National Oilwell Sales Order Number:	**406425**
Customer:	**TSG Technologies**
Customer P.O.:	**101581**

Felicia Miller

National-Oilwell Representative

National Oilwell

Certificate of Conformance

Date: December 8, 2004

It is hereby certified that the products identified herein conform to the applicable engineering drawings and specifications. Raw materials used in the manufacture of these products are in compliance with the specifications. It is further certified that all requirements regarding asbestos, mercury, radium and alpha contamination have been observed. Objective quality evidence supporting this certification is on file at National Oilwell, Tulsa, and available for verification.

Client	TSG Technologies	Client Purchase Order:	101581
National Oilwell S.O.:	406425	National Oilwell Job Number:	T490950
Equipment Type:	National Multiplex Pumps	Equipment Size:	110Q-3LS
Equipment Serial No:	54672		

Felicia Miller

Multiplex Tulsa Representative

National Oilwell

Certificate of Hydrostatic Testing

Date: December 8, 2004

It is hereby certified that the equipment identified hereon has been hydrostatic tested by competent authority in accordance with approved National Oilwell procedures and the test results as presented herein are true and accurate in all respects.

Client:	TSG Technologies	Client Purchase Order:	101581
National Oilwell SO:	406425	National Oilwell Job No.:	T490950A
Equipment Type:	National Multiplex Pump	Equipment Size:	110Q-3LS
Pump Serial No.:	54672	Fluid End Serial No.:	54180

Hydrostatic Test No:
F.E.: 54180

Test Medium: Water
Duration: 30 Minutes
Hydrostatic Test Pressure: 425 psig suction
1920 psig discharge

Test Liquid Temp.: 70° F
Test Witnessed By: N/A

CLIENT ITEM/TAG NO: N/A
TEST RESULTS: No detectable leaks or seepage.
TEST LOCATION: National Oilwell - Tulsa, Oklahoma
TEST DATE: 11-15-04

Felicia Miller
Multiplex Tulsa Representative

#2

NATIONAL OILWELL

Multiplex Works Pump History / Check Sheet

Job No. T490950 / T490951 Part No. 6QJ-271315-429 / 550-122001-000 Date 10-22-04

Serial No. 54672 Pump Model HP125/110Q-3US EQR No. 406425-2

Tested to Standard: SEP 6.5.8
(i.e., S.E.P., PS, etc.)

					N/A	CK	By
Crank Shaft End Play:						✓	RB
Shims Used Right Side:	Gasket		Shim	✓		✓	
Shims Used Left Side:	Gasket		Shim	✓		✓	
Conn Rod Bearings							
Side Clearance:					✓		RB
Rod Bolt Torque:	45	159	318	Other: 55		✓	
Pinion Shaft End Play:					✓		
Shims Used Right Side:					✓		
Shims Used Left Side:					✓		
Gear Ratio:					✓		
Gear & Pinion Blue Pattern:					✓		
General Check for Proper Condition							
Crankshaft Oil Holes: Clean & No Burrs						✓	RB
Internal Oil Pump Drive Alignment:					✓		
Adjust Crankshaft Oil Scrapers					✓		
Lube Oiliness: Fittings Tight & Lines Clean					✓		
Clean & Flush Sump:					✓		
After Assembly Inspection							
Lubricator: Check Drive Fittings & Lines					✓		RB
Aux. Equipment: Guards etc. Properly Mounted					✓		
General External and Internal Condition:						✓	

FLUID END INFORMATION RECORD

1	Assembly Person: CH				Date: 11/8/04			
2	Quintiplex ✓	Triplex		Monoblock				
3	Fluid End Material	Al-Brz	Steel	S.S. ✓	Cast Iron		Other	
4	Fluid End Serial Number: 54680			Hydro Tested by: RB				
5	Suction Pressure: 425 psig			Discharge Pressure: 1920 psig				
6	Valve Type	Plate	Cage	Ball	Spherical ✓	Wing	Disc	Other
7	Plungers and Packing Installed by: CH							
8	Fluid End Heat/Code Identification Number(s): X213							

TEST RECORD

1	Date of Test: 11/8/04	Test Spec. No.: SEP 6.5.8		Tested by: MW		
2	Fluid End Pressure (psi) :	788				
	R.P.M. :	424				
3	Plunger Diameter: 2 7/8"		Duration of Test: 75 min.			
4	Oil Pressure at Test: 60#	Observed Crosshead Lube During Test: —				
5	Crank Bearings Normal Temp. ✓		Pinion Bearings Normal Temp. NA			
6	Rust Preventive Treatment Applied:		Yes ✓	RB	No	
7	Identification Numbers Clearly Visible:		Yes ✓	No	By: CH	
8	Power End Acceptance by: MW				Date: 11/8/04	
	Paint Inspection and Acceptance by: RB				Date: 11/15/04	
	Prior to Shipment Pictures, If possible. By: EJ / DRiesgo				Date: 11/17/04	
	Final Inspection and Acceptance by: GWBacon				Date: 11/15/04	

Note: All Lines Must be Filled Out. If Not Applicable Use (N/A)

National Oilwell

Inspection Data Book

Client:	TSG Technologies
Client Contract/P.O.:	101581
Equipment Description:	Multiplex Pumps
Model Number:	110Q-3LS
Client Serial/Tag Number:	N/A
National Oilwell Job No.:	T490950
National Oilwell S.O. No.:	406425
National Oilwell Serial No.:	54673

National Oilwell

Quality Assurance

Final Inspections/Test Report

Number: 406425 Date: December 8, 2004

The below listed equipment has successfully completed all required inspections and tests and is hereby released for:

_____Customer/Third Party Acceptance
_____Inspections/Tests
___✓___Packaging Preservation and Shipment

Comments: N/A

Client:	TSG Technologies
Equipment:	National Oilwell Multiplex Pumps
Equipment Serial No:	54673

Felicia Miller

Multiplex Tulsa Representative

National Oilwell

Manufactures Certificate of Authenticity And Quality Control

Date: December 8, 2004

It is hereby certified that the products identified hereon are genuine National Oilwell Products manufactured in the United States of America conforming to all National Oilwell Quality Standards.

It is further certified that the products are in complete compliance with the applicable product engineerings, Technical specifications, material specifications and product regulatory codes and standards, and that all regulations Regarding the use of asbestos, mercury, radium and alpha contamination have been observed during manufacturing.

National Oilwell Sales Order Number:	**406425**
Customer:	**TSG Technologies**
Customer P.O.:	**101581**

Felicia Miller

National-Oilwell Representative

National Oilwell

Certificate of Conformance

Date: December 8, 2004

It is hereby certified that the products identified herein conform to the applicable engineering drawings and specifications. Raw materials used in the manufacture of these products are in compliance with the specifications. It is further certified that all requirements regarding asbestos, mercury, radium and alpha contamination have been observed. Objective quality evidence supporting this certification is on file at National Oilwell, Tulsa, and available for verification.

Client	TSG Technologies	Client Purchase Order:	101581
National Oilwell S.O.:	406425	National Oilwell Job Number:	T490950
Equipment Type:	National Multiplex Pumps	Equipment Size:	110Q-3LS
Equipment Serial No:	54673		

Felicia Miller

Multiplex Tulsa Representative

National Oilwell

Certificate of Hydrostatic Testing

Date: December 8, 2004

It is hereby certified that the equipment identified hereon has been hydrostatic tested by competent authority in accordance with approved National Oilwell procedures and the test results as presented herein are true and accurate in all respects.

Client:	TSG Technologies	Client Purchase Order:	101581
National Oilwell SO:	406425	National Oilwell Job No.:	T490950A
Equipment Type:	National Multiplex Pump	Equipment Size:	110Q-3LS
Pump Serial No.:	54673	Fluid End Serial No.:	54179

Hydrostatic Test No:
F.E.: 54179

Test Medium: Water
Duration: 30 Minutes
Hydrostatic Test Pressure: 425 psig suction
1920 psig discharge

Test Liquid Temp.: 70° F
Test Witnessed By: N/A

CLIENT ITEM/TAG NO: N/A
TEST RESULTS: No detectable leaks or seepage.
TEST LOCATION: National Oilwell - Tulsa, Oklahoma
TEST DATE: 11-17-04

Felicia Miller
Multiplex Tulsa Representative

NATIONAL OILWELL

Multiplex Works Pump History / Check Sheet

T490951 550-122001-000 11/11/04

Job No. T490950 Part No. 6QJ-271315-429 Date 11/11/04

Serial No. ~~54179~~ 54673 Pump Model 110 Q-325 EQR No. 406425-2

Tested to Standard: SEP 6.5.8
(i.e., S.E.P., PS, etc.)

					N/A	CK	By
Crank Shaft End Play:						✓	MW
Shims Used Right Side:	Gasket		Shim	✓		✓	
Shims Used Left Side:	Gasket		Shim	✓		✓	
Conn Rod Bearings							
Side Clearance:						✓	MW
Rod Bolt Torque:	45	159	318	Other: 85		✓	
Pinion Shaft End Play:					✓		
Shims Used Right Side:					✓		
Shims Used Left Side:					✓		
Gear Ratio:					✓		
Gear & Pinion Blue Pattern:					✓		
General Check for Proper Condition							
Crankshaft Oil Holes: Clean & No Burrs						✓	MW
Internal Oil Pump Drive Alignment:					✓		
Adjust Crankshaft Oil Scrapers					✓		
Lube Oiliness: Fittings Tight & Lines Clean					✓		
Clean & Flush Sump:						✓	
After Assembly Inspection							
Lubricator: Check Drive Fittings & Lines					✓		MW
Aux. Equipment: Guards etc. Properly Mounted					✓		
General External and Internal Condition:						✓	

FLUID END INFORMATION RECORD

1	Assembly Person: Mike Willis				Date: 11/11/04		
2	Quintiplex ✓	Triplex		Monoblock			
3	Fluid End Material	Al-Brz	Steel	S.S. Duplex	Cast Iron		Other
4	Fluid End Serial Number: 54179			Hydro Tested by: AB			
5	Suction Pressure: 425 psig			Discharge Pressure: 1920 psig			
6	Valve Type	Plate	Cage	Ball	Spherical ✓	Wing	Disc	Other
7	Plungers and Packing Installed by: Mike Willis						
8	Fluid End Heat/Code Identification Number(s): X162						

TEST RECORD

1	Date of Test: 11/12/04	Test Spec. No.: SEP 6.5.8		Tested by: MW		
2	Fluid End Pressure (psi) :	788				
	R.P.M. :	424				
3	Plunger Diameter: 2 7/8"		Duration of Test: 75 MIN.			
4	Oil Pressure at Test: 45 #	Observed Crosshead Lube During Test: —				
5	Crank Bearings Normal Temp. ✓		Pinion Bearings Normal Temp. N/A			
6	Rust Preventive Treatment Applied:		Yes ✓	RB	No	
7	Identification Numbers Clearly Visible:		Yes ✓	No	By: MW	
8	Power End Acceptance by: MW				Date: 11/12/04	
	Paint Inspection and Acceptance by: RB				Date: 11/16/04	
	Prior to Shipment Pictures, If possible. By: BLT / NR Rickson				Date: 11/17/04	
	Final Inspection and Acceptance by: GD Bacon				Date: 11/17/04	

Note: All Lines Must be Filled Out. If Not Applicable Use (N/A)

National Oilwell

Inspection Data Book

Client:	TSG Technologies
Client Contract/P.O.:	101581
Equipment Description:	Multiplex Pumps
Model Number:	110Q-3LS
Client Serial/Tag Number:	N/A
National Oilwell Job No.:	T490950
National Oilwell S.O. No.:	406425
National Oilwell Serial No.:	54674

National Oilwell

Quality Assurance

Final Inspections/Test Report

Number: 406425 Date: December 8, 2004

The below listed equipment has successfully completed all required inspections and tests and is hereby released for:

_____Customer/Third Party Acceptance
_____Inspections/Tests
__✓__Packaging Preservation and Shipment

Comments: N/A

Client:	TSG Technologies
Equipment:	National Oilwell Multiplex Pumps
Equipment Serial No:	54674

Felicia Miller

Multiplex Tulsa Representative

National Oilwell

Manufactures Certificate of Authenticity And Quality Control

Date: December 8, 2004

It is hereby certified that the products identified hereon are genuine National Oilwell Products manufactured in the United States of America conforming to all National Oilwell Quality Standards.

It is further certified that the products are in complete compliance with the applicable product engineerings, Technical specifications, material specifications and product regulatory codes and standards, and that all regulations Regarding the use of asbestos, mercury, radium and alpha contamination have been observed during manufacturing.

National Oilwell Sales Order Number:	**406425**
Customer:	**TSG Technologies**
Customer P.O.:	**101581**

Felicia Miller

National-Oilwell Representative

National Oilwell

Certificate of Conformance

Date: December 8, 2004

It is hereby certified that the products identified herein conform to the applicable engineering drawings and specifications. Raw materials used in the manufacture of these products are in compliance with the specifications. It is further certified that all requirements regarding asbestos, mercury, radium and alpha contamination have been observed. Objective quality evidence supporting this certification is on file at National Oilwell, Tulsa, and available for verification.

Client	TSG Technologies	Client Purchase Order:	101581
National Oilwell S.O.:	406425	National Oilwell Job Number:	T490950
Equipment Type:	National Multiplex Pumps	Equipment Size:	110Q-3LS
Equipment Serial No:	54674		

Felicia Miller

Multiplex Tulsa Representative

National Oilwell

Certificate of Hydrostatic Testing

Date: December 8, 2004

It is hereby certified that the equipment identified hereon has been hydrostatic tested by competent authority in accordance with approved National Oilwell procedures and the test results as presented herein are true and accurate in all respects.

Client:	TSG Technologies	Client Purchase Order:	101581
National Oilwell SO:	406425	National Oilwell Job No.:	T490950A
Equipment Type:	National Multiplex Pump	Equipment Size:	110Q-3LS
Pump Serial No.:	54674	Fluid End Serial No.:	54229

Hydrostatic Test No:
F.E.: 54229

Test Medium: Water
Duration: 30 Minutes
Hydrostatic Test Pressure: 425 psig suction
1920 psig discharge

Test Liquid Temp.: 70° F
Test Witnessed By: N/A

CLIENT ITEM/TAG NO: N/A
TEST RESULTS: No detectable leaks or seepage.
TEST LOCATION: National Oilwell - Tulsa, Oklahoma
TEST DATE: 11-17-04

Felicia Miller

Multiplex Tulsa Representative

NATIONAL OILWELL

Multiplex Works Pump History / Check Sheet

Job No. 490950 Part No. 6QJ-271315-429 Date 11/10/04

Serial No. 54679 Pump Model 110 Q-325 EQR No. 406425-2

Tested to Standard:
(i.e., S.E.P., PS, etc.)

					N/A	CK	By
Crank Shaft End Play:						✓	DB
Shims Used Right Side:	Gasket		Shim	✓		✓	
Shims Used Left Side:	Gasket		Shim	✓		✓	
Conn Rod Bearings							
Side Clearance:						✓	DB
Rod Bolt Torque:	45	159	318	Other: 85		✓	
Pinion Shaft End Play:					✓		
Shims Used Right Side:					✓		
Shims Used Left Side:					✓		
Gear Ratio:					✓		
Gear & Pinion Blue Pattern:					✓		
General Check for Proper Condition							
Crankshaft Oil Holes: Clean & No Burrs						✓	DB
Internal Oil Pump Drive Alignment:					✓		
Adjust Crankshaft Oil Scrapers					✓		
Lube Oiliness: Fittings Tight & Lines Clean					✓		
Clean & Flush Sump:						✓	
After Assembly Inspection							
Lubricator: Check Drive Fittings & Lines					✓		DB
Aux. Equipment: Guards etc. Properly Mounted					✓		
General External and Internal Condition:						✓	

FLUID END INFORMATION RECORD							
1	Assembly Person: David Bacon				Date: 11/10/04		
2	Quintiplex ✓	Triplex		Monoblock			
3	Fluid End Material	Al-Brz	Steel	S.S. Duplex ✓	Cast Iron		Other
4	Fluid End Serial Number: 54229			Hydro Tested by: AB			
5	Suction Pressure: 425 psig			Discharge Pressure: 1920 psig			
6	Valve Type	Plate	Cage	Ball	Spherical ✓	Wing	Disc	Other
7	Plungers and Packing Installed by: RB						
8	Fluid End Heat/Code Identification Number(s): X 218						

TEST RECORD						
1	Date of Test: 11/13/04	Test Spec. No.: SEP 6.5.8		Tested by: MW		
2	Fluid End Pressure (psi):	788				
	R.P.M.:	424				
3	Plunger Diameter: 2 7/8"		Duration of Test: 75 min.			
4	Oil Pressure at Test: 50 #	Observed Crosshead Lube During Test: —				
5	Crank Bearings Normal Temp. ✓		Pinion Bearings Normal Temp. NA			
6	Rust Preventive Treatment Applied:		Yes ✓	RB	No	
7	Identification Numbers Clearly Visible:		Yes ✓	No	By: MW	
8	Power End Acceptance by: MW				Date: 11/13/04	
	Paint Inspection and Acceptance by: RB				Date: 11/16/04	
	Prior to Shipment Pictures, if possible. By: E.T./D.Pierce				Date: 11/17/04	
	Final Inspection and Acceptance by: G.D.Bacon				Date: 11/17/04	

Note: All Lines Must be Filled Out. If Not Applicable Use (N/A)

National Oilwell

Inspection Data Book

Client:	TSG Technologies
Client Contract/P.O.:	101581
Equipment Description:	Multiplex Pumps
Model Number:	110Q-3LS
Client Serial/Tag Number:	N/A
National Oilwell Job No.:	T490950A
National Oilwell S.O. No.:	406425
National Oilwell Serial No.:	54675

National Oilwell

Quality Assurance

Final Inspections/Test Report

Number: 406425 Date: December 8, 2004

The below listed equipment has successfully completed all required inspections and tests and is hereby released for:

_____Customer/Third Party Acceptance
_____Inspections/Tests
___✓___Packaging Preservation and Shipment

Comments: N/A

Client:	TSG Technologies
Equipment:	National Oilwell Multiplex Pumps
Equipment Serial No:	54675

Felicia Miller

Multiplex Tulsa Representative

National Oilwell

Manufactures Certificate of Authenticity And Quality Control

Date: December 8, 2004

It is hereby certified that the products identified hereon are genuine National Oilwell Products manufactured in the United States of America conforming to all National Oilwell Quality Standards.

It is further certified that the products are in complete compliance with the applicable product engineerings, Technical specifications, material specifications and product regulatory codes and standards, and that all regulations Regarding the use of asbestos, mercury, radium and alpha contamination have been observed during manufacturing.

National Oilwell Sales Order Number: **406425**
Customer: **TSG Technologies**
Customer P.O.: **101581**

Felicia Miller
National-Oilwell Representative

National Oilwell

Certificate of Conformance

Date: December 8, 2004

It is hereby certified that the products identified herein conform to the applicable engineering drawings and specifications. Raw materials used in the manufacture of these products are in compliance with the specifications. It is further certified that all requirements regarding asbestos, mercury, radium and alpha contamination have been observed. Objective quality evidence supporting this certification is on file at National Oilwell, Tulsa, and available for verification.

Client	TSG Technologies	Client Purchase Order:	101581
National Oilwell S.O.:	406425	National Oilwell Job Number:	T490950A
Equipment Type:	National Multiplex Pumps	Equipment Size:	110Q-3LS
Equipment Serial No:	54675		

Felicia Miller

Multiplex Tulsa Representative

National Oilwell

Certificate of Hydrostatic Testing

Date: December 8, 2004

It is hereby certified that the equipment identified hereon has been hydrostatic tested by competent authority in accordance with approved National Oilwell procedures and the test results as presented herein are true and accurate in all respects.

Client:	TSG Technologies	Client Purchase Order:	101581
National Oilwell SO:	406425	National Oilwell Job No.:	T490950A
Equipment Type:	National Multiplex Pump	Equipment Size:	110Q-3LS
Pump Serial No.:	54675	Fluid End Serial No.:	54734

Hydrostatic Test No:
F.E.: 54734

Test Medium: Water
Duration: 30 Minutes
Hydrostatic Test Pressure: 425 psig suction
1920 psig discharge

Test Liquid Temp.: 70° F
Test Witnessed By: N/A

CLIENT ITEM/TAG NO: N/A
TEST RESULTS: No detectable leaks or seepage.
TEST LOCATION: National Oilwell - Tulsa, Oklahoma
TEST DATE: 11-24-04

Felicia Miller
Multiplex Tulsa Representative

NATIONAL OILWELL

Multiplex Works Pump History / Check Sheet

T490950 6QJ-271312-429 11-22-04

Job No. T490781 Part No. 550-122001-000 Date 11-18-04

Serial No. 54675 Pump Model HM125 - 1100 -3LS EQR No. 406425

Tested to Standard: SEA 6.5.8
(i.e., S.E.P., PS, etc.)

					N/A	CK	By
Crank Shaft End Play:						✓	MW
Shims Used Right Side:	Gasket		Shim	✓		✓	
Shims Used Left Side:	Gasket		Shim	✓		✓	
Conn Rod Bearings							
Side Clearance:						✓	
Rod Bolt Torque:	45	159	318	Other: 82			
Pinion Shaft End Play:					✓		
Shims Used Right Side:					✓		
Shims Used Left Side:					✓		
Gear Ratio:					✓		
Gear & Pinion Blue Pattern:					✓		
General Check for Proper Condition							
Crankshaft Oil Holes: Clean & No Burrs						✓	
Internal Oil Pump Drive Alignment:					✓		
Adjust Crankshaft Oil Scrapers					✓		
Lube Oiliness: Fittings Tight & Lines Clean					✓		
Clean & Flush Sump:						✓	
After Assembly Inspection							
Lubricator: Check Drive Fittings & Lines					✓		
Aux. Equipment: Guards etc. Properly Mounted					✓		
General External and Internal Condition:						✓	

FLUID END INFORMATION RECORD							
1	Assembly Person: Mike Willis				Date: 11/22/04		
2	Quintiplex ✓	Triplex		Monoblock			
3	Fluid End Material	Al-Brz ✓	Steel	S.S.	Cast Iron		Other
4	Fluid End Serial Number: 54734			Hydro Tested by: AB			
5	Suction Pressure: 425	psig		Discharge Pressure: 1920	psig		
6	Valve Type	Plate	Cage	Ball	Spherical ✓	Wing	Disc	Other
7	Plungers and Packing Installed by: MW						
8	Fluid End Heat/Code Identification Number(s): 01/264						

TEST RECORD						
1	Date of Test: 11/23/04	Test Spec. No.: SEA 6.5.8		Tested by: MW		
2	Fluid End Pressure (psi) :	788				
	R.P.M. :	424				
3	Plunger Diameter: 2 3/8"		Duration of Test: 75 Min.			
4	Oil Pressure at Test: 47#	Observed Crosshead Lube During Test: ✓				
5	Crank Bearings Normal Temp. ✓		Pinion Bearings Normal Temp. NA			
6	Rust Preventive Treatment Applied:		Yes ✓		No	
7	Identification Numbers Clearly Visible:		Yes ✓	No	By: Marty W.	
8	Power End Acceptance by: Marty W.				Date: 11/23/04	
	Paint Inspection and Acceptance by:				Date:	
	Prior to Shipment Pictures, if possible. By: RLB				Date: 11/24/04	
	Final Inspection and Acceptance by: CH				Date: 11/24/04	
	Note: All Lines Must be Filled Out. If Not Applicable Use (N/A)					

WHEATLEY

operators manual

For P-330A, 5P-330A & HP-125L Series Plunger Pumps

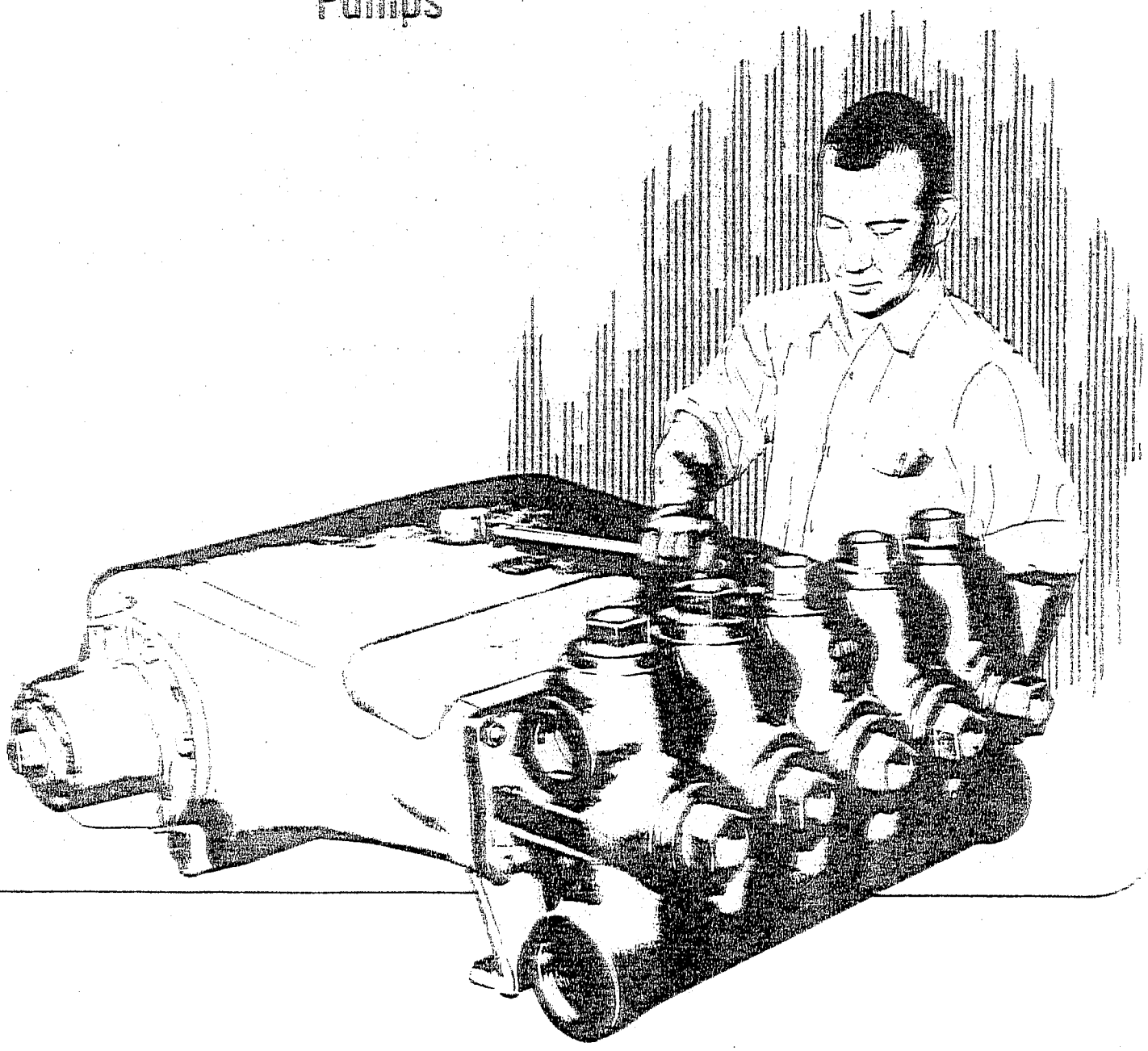

Notice

Ceramic plungers are not of our manufacture. Manufacturers of ceramic plungers make no warranty to us on the service life of these plungers, and assume no responsibility for failure from any cause. Consequently, Wheatley assumes no responsibility for plunger life or costs involved in the failure of ceramic plungers for any reason, for the cost of incidental damages resulting from such failure. No firm or individual, whether our representative or not, is authorized to commit this Company to anything contrary to these provisions.

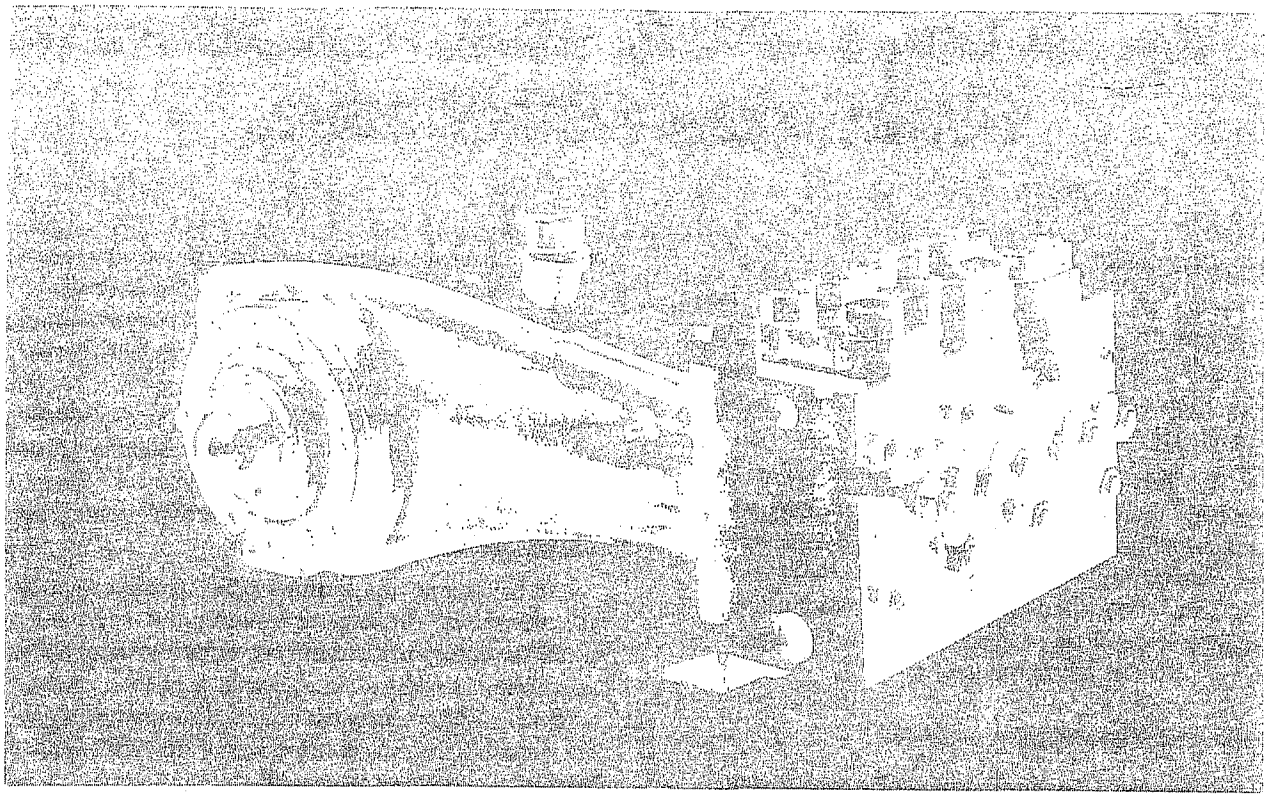

INTRODUCTION

INTRODUCTION

Wheatley pumps are manufactured in accordance with the highest standards demanded by the petroleum industry. Proper maintenance and care will prolong the period of satisfactory service, and reduce costs.

These instructions were written to promote the care, operation, and maintenance of your pump. When trouble arises outside the scope of this manual, our Engineering Department and all other factory facilities are ready to help you. Feel free to contact us for assistance.

To improve our products, we must be informed of the problems and solutions which occur in the field. We request that you send to us short reports of your experiences. Include the pump figures and serial numbers, the operating conditions, the problems, and the solution, if any, and forward to Wheatley, ATTENTION: Engineering Department, P. O. Box 3249, Tulsa, Oklahoma 74101. Your help will be greatly appreciated.

SERVICE

Wheatley has distributors throughout the United States who have servicemen available in case of emergency or a major overhaul. Most of these distributors have parts available and can give you the necessary help in service work. We prefer that all service be handled through an authorized distributor; however, in extreme emergencies, Wheatley can dispatch a serviceman. This normally will require a 24-hour notice.

P-330A , 5P-330A & HP-125L SERIES PLUNGER PUMPS INSTALLATION INSTRUCTIONS

PROPER INSTALLATION

Proper installation is of prime importance. The fluid lifting capabilities of a reciprocating pump are limited. It is necessary to flood the pump suction with fluid as a minimum requirement for satisfactory operation.

The Engineering Department of Wheatley is available for consultation on your pumping problems. Doubtful conditions should be checked with the Engineering Department prior to installation of the unit. These requirements vary with different liquids. The general requirement is a flooded suction, or 33 feet NPSH required.

THE SUCTION LINE

The Suction Line must be at *least* as large as the pump suction connection size. It is advisable to use flexible hose rather than piping. The number of ells, or turns, should be kept to an absolute minimum. An ideal installation would have none at all. If ells are necessary, they should be installed no closer than five (5) feet from the pump inlet, and no two ells should be closer together than three (3) feet. All valves in the suction line must be full opening type. 45 degree ells are greatly preferred rather than 90 degree ells; or, 45 degree branch lateral plus 45 degree ells are better than 90 degree ells.

DISCHARGE PIPING

Discharge Piping should extend at least five (5) feet from the pump before any turns, or ells, are installed. To eliminate line stresses on the pump, it is again recommended that high pressure flexible hose be installed for the first five feet. Any ells used should be 45 degree type, rather than 90 degree. Again, 45 degree branch lateral plus 45 degree elbow is preferable to a single 90 degree ell.

RELIEF VALVES

Relief Valves protect pumps from failure due to excess pressure and must be installed in the discharge piping. If desired, relief valve and bypass piping can be installed at the factory on new units at minimum additional cost. Operation *without* a properly set relief valve *(setting to correspond to size plunger used)* is dangerous and we will not be responsible for loss of life, or property, or held liable for damage. Nor will we accept responsibility for premature failure of any parts resulting from lack of a good relief valve, correctly set. *(Refer to ES-129 for recommendations regarding sizing and selection of relief valves.)*

These pumps are sturdily built, precisely manufactured and creatively engineered units. If properly installed and given careful preventive maintenance, maximum service at the lowest possible cost is attained. Make sure suction and discharge hookups are proper, then read the pages of periodic maintenance. Then start the pump.

TO START THE PUMP

To start the pump, roll pump over once by hand. Then open the suction line valve and permit fluid to fill the fluid cylinder body. Bleed all air by opening a bleed-off valve, removing the valve cover until fluid flows out constantly. Close the bleed-off valve and replace the valve cover. Then open the discharge valve and start the unit in operation. Any roughness will probably be from trapped air, or from starvation *(insufficient fluid getting to pump)*. Remove these troubles before permitting the pump to run continuously.

A PULSATION DAMPENER

A Pulsation Dampener, properly selected, correctly precharged, and located at, or on the pump is a very worthwhile investment. Longer life for valves, springs, and plungers with reduced surges and a generally quieter installation are the dividends. We strongly recommend their use. Pulsation dampeners applied to the pump suction can also greatly promote smoother operation - particularly when long suction lines and/or high suction pressures are used.

PREVENTIVE MAINTENANCE

INSTRUCTIONS

DAILY MAINTENANCE

1. Check the level of the crankcase lubricating oil. The crankcase holds 2-1/2 gallons for triplex models and (5 gallons for quintuplex models).

   Antiwear (non-detergent)
   Oil Specification
   - +32 to +125 degrees F:
     ASTM Viscosity Grade S700/C150
     ISO Viscosity Grade ISO-VG150
   - -15 to +32 degrees F:
     ASTM Viscosity Grade S315/C68
     ISO viscosity Grade ISO-VG68

2. Pumps equipped with grease fittings for lubricating the stuffing boxes should be greased daily when pumping crude oil, or as often as required when pumping non-lubricating fluids such as water, products, etc. If preferred, grease the packing with lithium-base grease, or with water pump grease. If a stuffing box force-feed lubricator is installed, check the oil level. Fill if necessary. Use rock drill oil in the force-fee lubricator, or such other lubricant as recommended. [*Refer to Wheatley Engineering Standard Sheet No. ES-120 for specific recommendations.*]

3. Use a spanner wrench to tighten the stuffing box nut. It should be wrench-tight at all times. The packing used in this pump is the hardcore type, and must be tight always.

4. Keep the pump clean. *(See No. 6 under Monthly Maintenance.)*

MONTHLY MAINTENANCE

1. Drain and refill the crankcase two weeks after initial startup, and every six months thereafter, or immediately whenever foreign matter enters the crank end.

2. Wash the crankcase air filter in kerosene.

3. Inspect the pump valves for signs of wear. Worn discs may sometimes be flipped over. Valve spring should be replaced if worn, broken, or bent out of shape. Seat faces may show uniform wear – but must be replaced if fluid cut, or grooved.

4. Crankshaft bearing and connecting rod wrist pins should be checked for excess "*play*" and corrective measures taken – as explained elsewhere in this manual.

5. Tighten all studs, nuts, and cap screws. Check for gasket leaks and inspect all connections. Observe plunger for signs of grooves or damage. Replace if worn.

6. Keep the pump clean. It will aid in spotting troubles before they become serious. Keep the stuffing box sump drain clean.

7. Use only genuine Wheatley replacement parts.

GENERAL MAINTENANCE

These pumps have been designed to simplify maintenance and make service easy. Preventive maintenance and overhauls before serious troubles occur will reduce operating costs. The following section outlines the various steps necessary for the removal and replacement of all parts. If an overhaul is required, follow the specific instructions carefully. Contact the factory if additional information is needed.

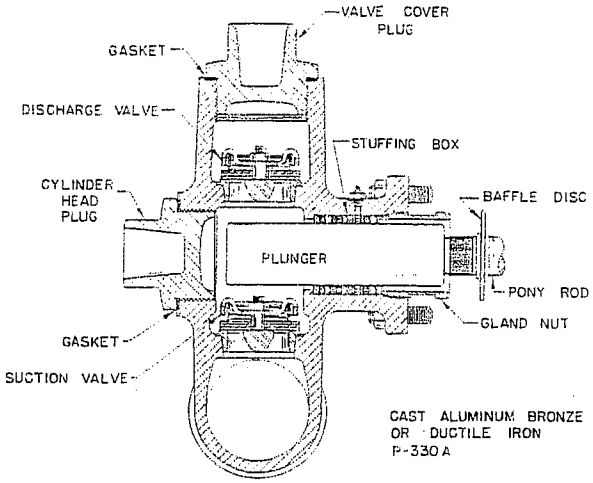

CROSS-SECTION OF FLUID CYLINDER

Fig. 1

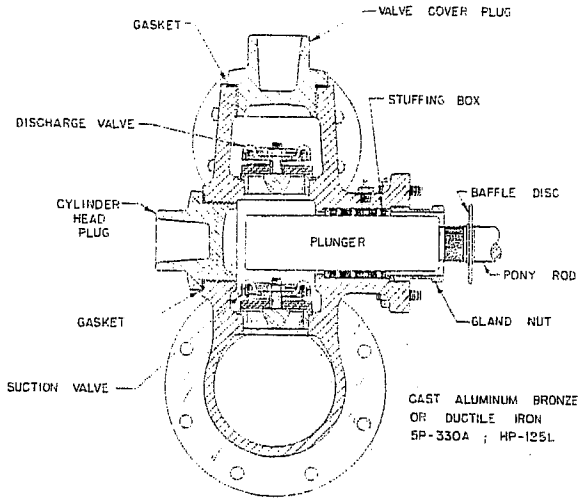

CROSS-SECTION OF FLUID CYLINDER

Fig. 1

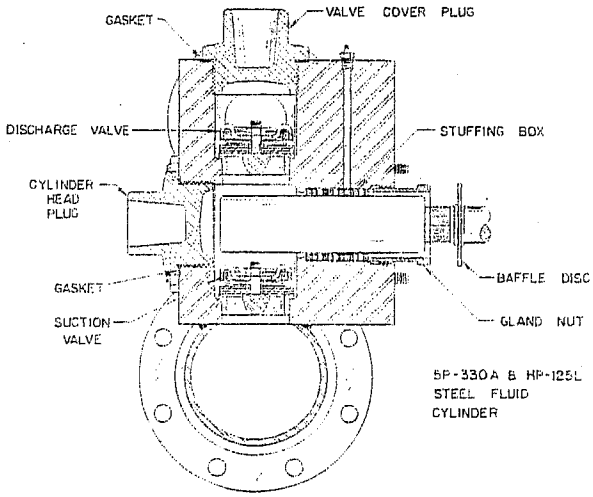

CROSS-SECTION OF FLUID CYLINDER

Fig. 1

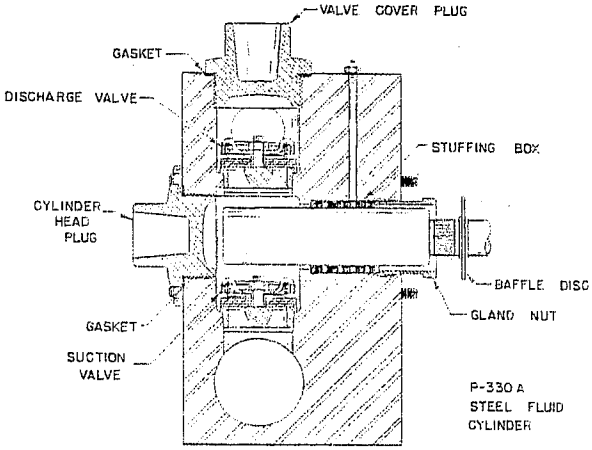

CROSS-SECTION OF FLUID CYLINDER

Fig. 1

GENERAL INSTRUCTIONS

DISCHARGE VALVES

The discharge valve is located just beneath the valve cover in the upper part of the fluid cylinder body. Replacement of the spring, or disc, can be accomplished without removing the valve seats. If it is necessary to remove the discharge valve seat, remove with valve seat puller available from Wheatley Company. Be careful not to mar the reamed seat deck.

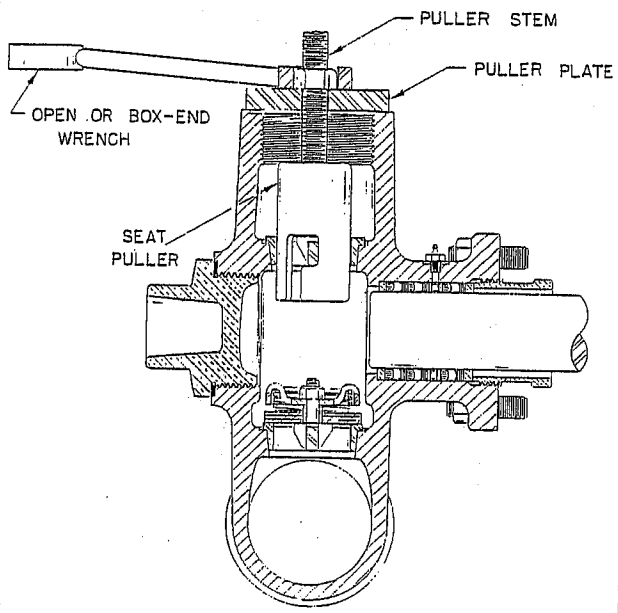

REMOVAL OF DISCHARGE VALVE SEAT

Fig. 2

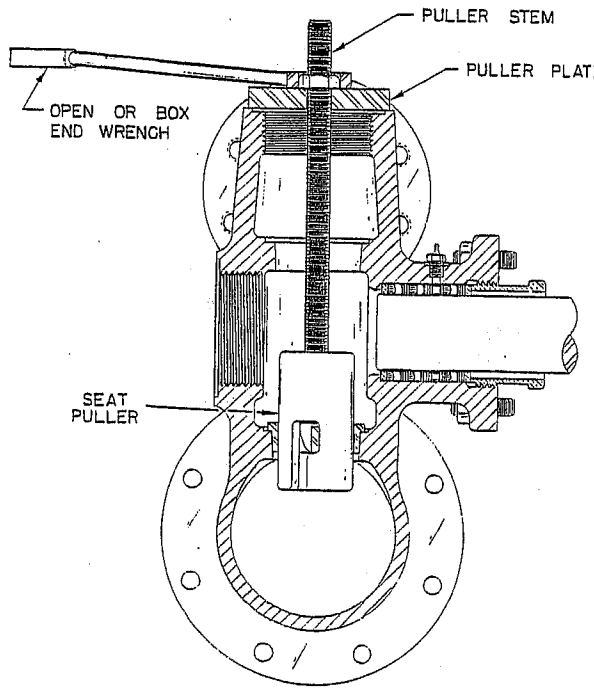

REMOVAL OF SUCTION VALVE SEAT

Fig. 3

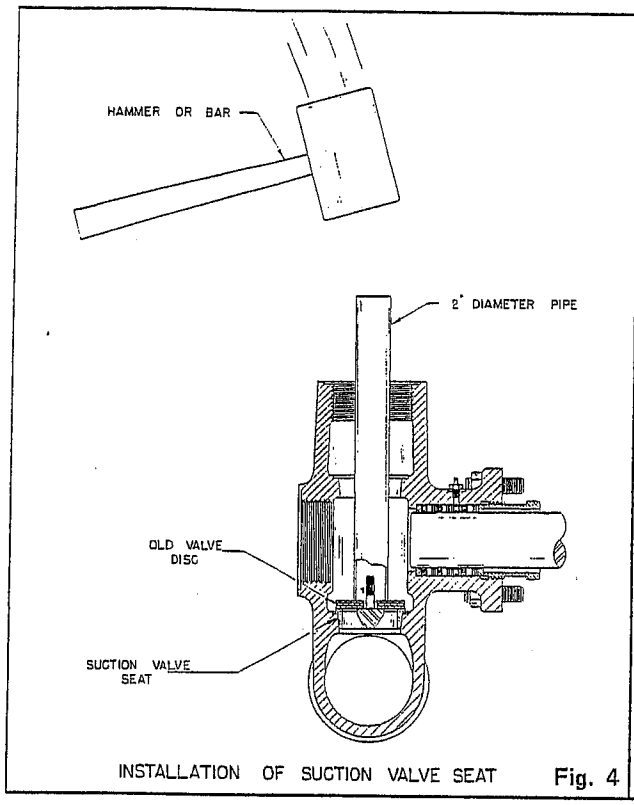

INSTALLATION OF SUCTION VALVE SEAT **Fig. 4**

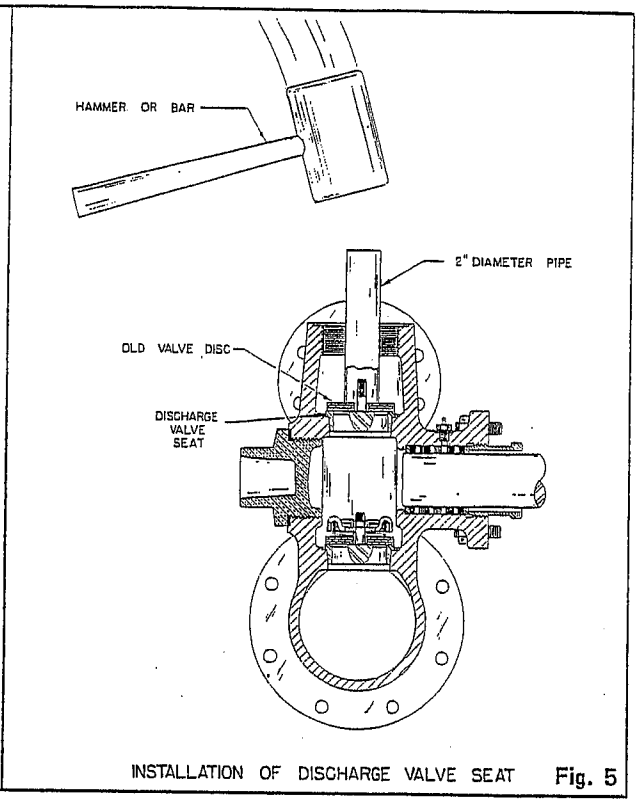

INSTALLATION OF DISCHARGE VALVE SEAT **Fig. 5**

SUCTION VALVES

The suction valve is accessible after removing the cylinder head plug. To remove the suction valve seat, it is necessary to remove first the discharge valve. To get the plunger out of the way, rotate the pump until the plunger reaches back position. Stop it before beginning the forward stroke. The next step is to remove the valve stem nut and lift out the cage, spring, disc, and spacer. Seat removal is accomplished by the use of a special tool available from the factory.

Refer to Fig. 4 when *installing* valve seats, take care to avoid damage of tapered deck seating surface. Valve seats should be DRIVEN into the seat deck until firmly seated. This is done by using an old disc in its regular position and driving with a piece of pipe and a hammer. CAUTION: Never drive on the valve stem and do not use any method which will distort valve seat. Taper surfaces must be CLEAN AND DRY! Use clean solvent or diesel fuel. Then wipe dry with a clean rag before assembly.

PLUNGERS

Plungers are removed through the fluid cylinder bore. First, remove the cylinder head plug. Then unscrew the plunger from the crosshead by using a pipe wrench, or chain wrench on the knurled portion of the plunger.

CAUTION

Apply the wrench to knurled surfaces only and handle the plunger carefully. Any nicks in the main body of the plunger will cause prompt and frequent packing failure. Be especially careful to avoid damaging ceramic plungers. These are easily broken where the ceramic body is bonded to the metal shank. Ceramic plungers are very brittle and fragile, and are easily chipped, or broken.

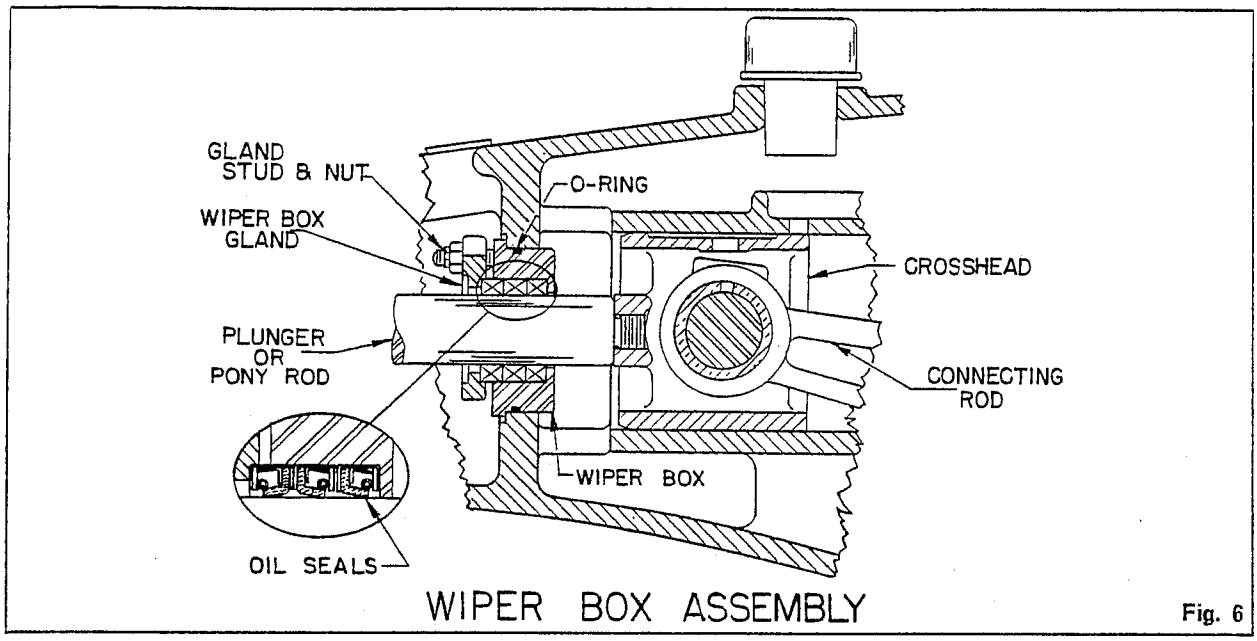

WIPER BOX ASSEMBLY

Fig. 6

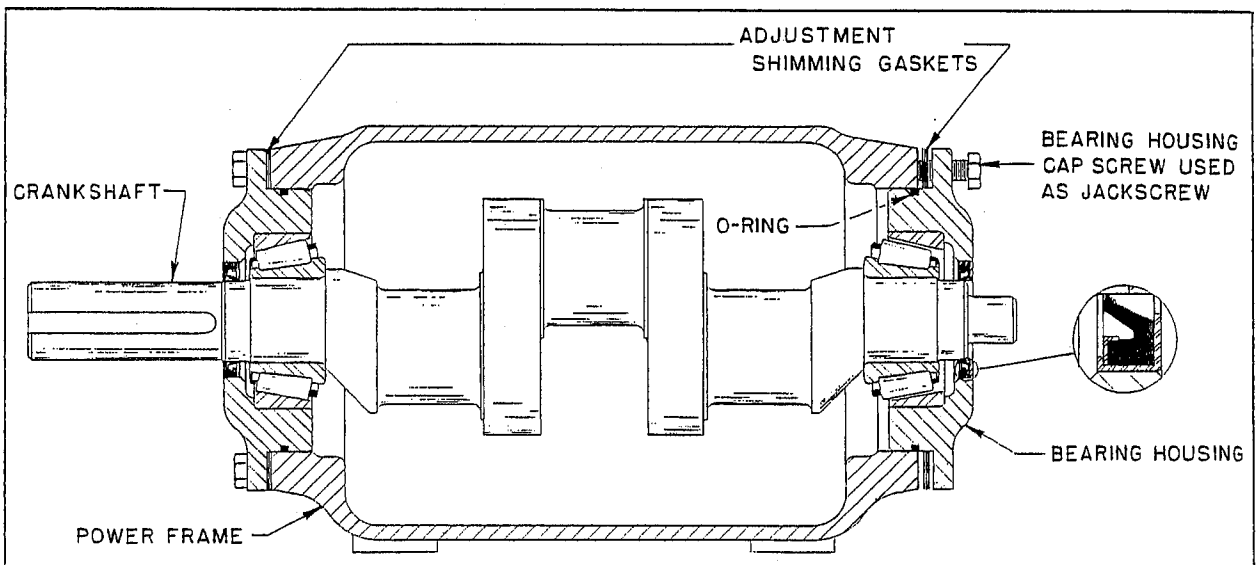

CROSS-SECTION OF POWER FRAME (TRIPLEX SHOWN)

Fig. 7

WIPER BOX

The wiper box assembly is held in the power frame by two adjustment studs. After removing the plunger and wiper box gland, the wiper box will slide out. It is necessary to disconnect the plunger when installing oil seals. The seals are a tight-fit in the wiper box, and the use of white lead and a seating disc are necessary to avoid damage, or distortion to seal case. Note the installation detail in Fig. 6 for proper facing of seals. Two seals must face toward crosshead, for retaining oil. One seal faces toward stuffing box, to exclude contaminants.

Oil the pony rod to facilitate easier entry thru the wiper seals and avoid damage of lips. Worn, pitted, or scored pony rods, or plungers must be replaced to avoid damaging seals and to retain crankcase oil properly.

CRANKSHAFT

The crankshaft is removed through the bearing housing opening. First, remove the connecting rod cap and push the remainder of the connecting rod assembly forward all the way. Second, remove the crankshaft bearing housings by removing all cap screws. Then, using two as jack screws, retract the housings by threading thru the housing flange against the pump frame. The crankshaft should then be free for removal through the bearing housing opening.

LUBRICATION OIL PUMP

(HP-125 Quintuplex Models Only)

The oil pump is an integral part of the power frame assembly in Fig. HP-125 pumps. It is driven by a slotted shaft which is fitted in the crankshaft. It has its own filter, oil pressure gauge, and pressure relief valve.

This pump draws oil through the filter located in the crankcase oil reservoir and discharges into the crankshaft, where it lubricates all connecting rod and wrist pin bearings.

The lube oil pump assembly may be removed after removing the six capscrews retaining it in the bearing housing. It then readily slips out, as a unit. *(It is not necessary to disturb either crankshaft or bearing housing.)*

The relief valve, located behind the pressure gauge, is adjustable and is provided to prevent excessive lube oil pressure - especially during a cold start up. Do not disturb the adjustment screw. It has been correctly set at the factory to obtain 15 psi, or more, after oil has become throughly warmed.

Inspect the rotor, crescent, and idler. Replace if worn. Clean the oil suction filter. The rotor shaft is driven by the crankshaft of the pump, by a drive pin. The oil pressure will vary with the speed of the crankshaft. It will also vary with the type oil used and the oil temperature. A safe oil pressure range is 15 psi, or more.

A self-reversing crescent is provided which re-directs the oil flow - if the direction of crankshaft rotation is accidently reversed for any reason. Thus, failure due to lack of oil pressure is prevented if the pump is accidentally run backwards. *(We do not recommend backwards operation. Observe the direction-of-rotation arrows cast on the power frame.)*

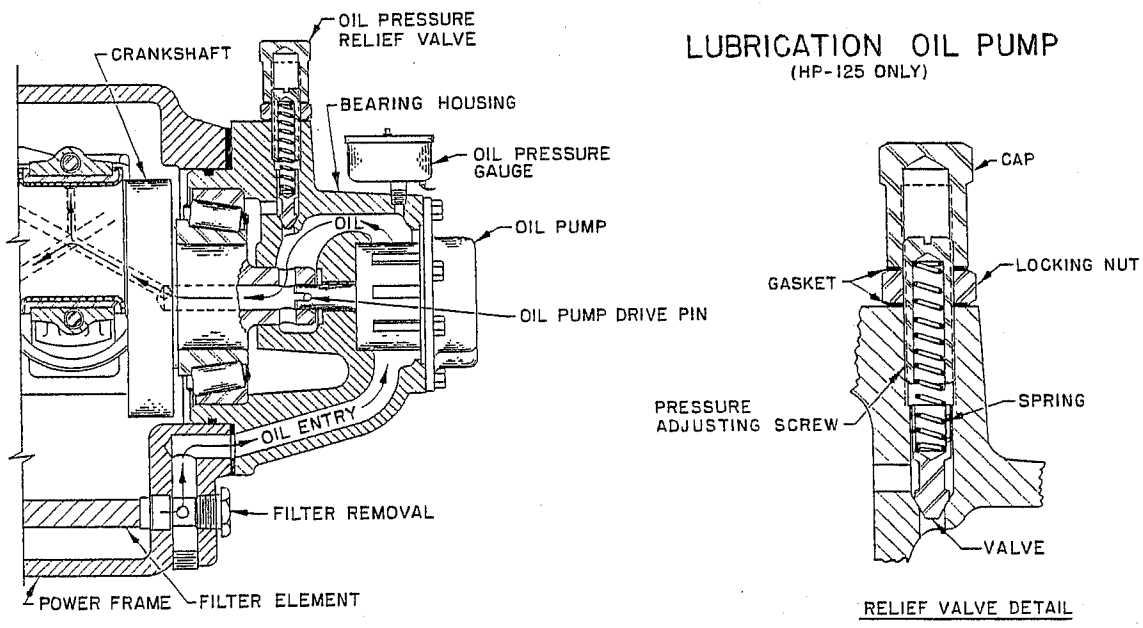

Fig. 8

SPECIAL NOTE

If an HP-125 pump which was built at the factory with the left hand drive, for example, is to be dis-assembled in the field to convert to a right hand drive, the reversing ring positioning clip *must not* be reversed 180 degrees. Leave the oil pump in its original position in the bearing housing.

The pressure gauge is provided with a low oil pressure shut-down switch. This may be connected to either the holding coil on a magnetic starter *(automatic type)* for the electric motor. Or, if a gas engine is being used, the shut-down switch may be wired to ground the magneto.

CRANKSHAFT BEARINGS

Adjustment of the crankshaft bearings is accomplished by using varying thickness of bearing housing gaskets. These gaskets are available in thicknesses of 1/16", 1/32", 1/64", and .005".

The correct adjustment is reached when the bearing housing capscrews have been drawn up tight and only the slightest drag is noticeable when the crankshaft is rotated.

To remove the bearings, the crankshaft must be removed first. The old bearings may be pulled from the crankshaft and the outer race from the bearing housing by use of a bearing puller.

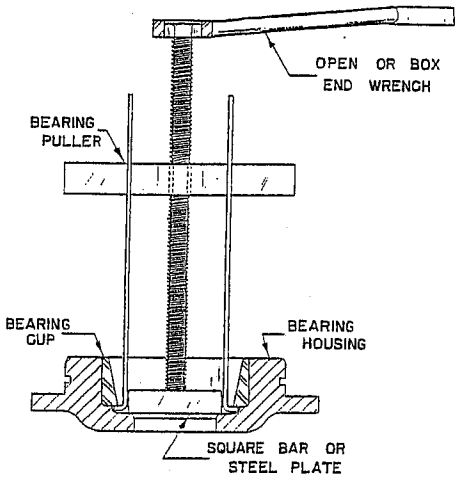

REMOVAL OF BEARING CUP FROM HOUSING

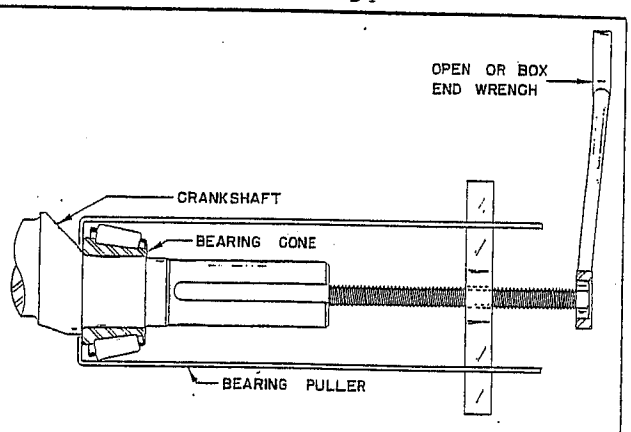

REMOVAL OF INSIDE CONE

Fig. 9

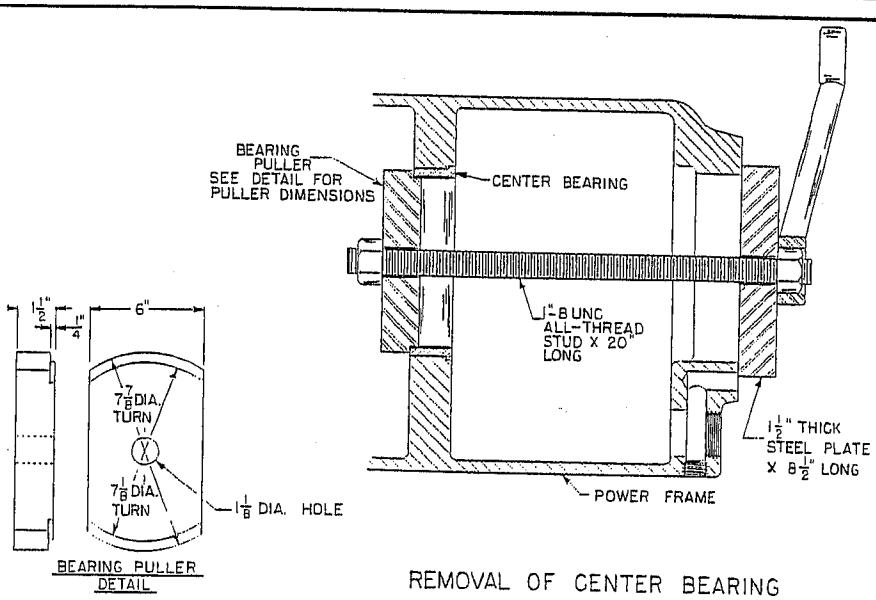

REMOVAL OF CENTER BEARING

Fig. 10

New bearings may be installed as follows: Expand bearing inner race by heating it in hot oil at 300 degrees F., drop it over the shaft and seat into position using a pipe sleeve and hammer. Shrink the outer race by packing it in dry ice for about ten minutes, then drop it into the bearing housing. CAUTION: Check the outer race to see that there is no slippage in the bearing housing. If slippage or rotation is present, the bearing housing should be replaced. If a hydraulic press is available, a preferred method is to press races into place, using no heat. Races must solidly abutt the adjacent shaft or housing shoulder. NEVER use a flame on races or rollers.

Crankshaft Diameter 2.564" to 2.565"
(HP-125 only 3.252" to 3.253")

CENTER BEARINGS

(Quintuplex Models) These steel-backed babbit bearings are not adjustable. Proper oil clearance of .005" to .007", (*on the side*), is measured using a feeler thickness gauge, inserting it between shaft journal and bearing bore.

To remove the center bearing, the crankshaft must be removed first. The bearings may be pulled from the power frame by the use of a bearing puller. See Fig. 10.

A new bearing may be installed by packing it in dry ice for about twenty minutes, then assemble it in its proper place in the power frame. After proper positioning, the bearing is then locked in place by set and lock screw. See Fig. 11.

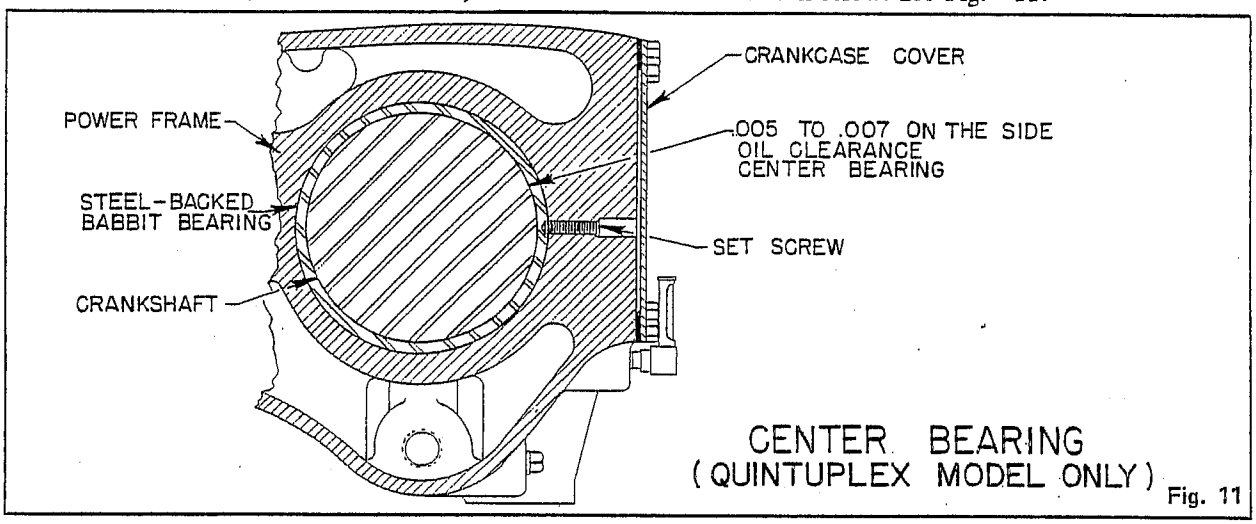

CENTER BEARING
(QUINTUPLEX MODEL ONLY)
Fig. 11

CONNECTING ROD AND CROSSHEAD ASSEMBLY

This assembly is removed through the crankcase end of the pump. After removal of the crankshaft and plungers, the connecting rod and crosshead assembly will slip out. Then press the pin out of the crosshead in a hydraulic press. CAUTION: When the connecting rod cap is removed, special care should be taken to reinstall the cap, shims and shell bearing in the same position from which they were removed. *(Be sure they are not turned end-for-end from original placement.)*

When installing a new rod, be sure the oil hole in the wrist pin bushing area is upright (*toward oil groove in the top of crosshead*), and that the oil groove on the crosshead is upright in the frame when putting assembly in pump.

Connecting rod shell bearings are precision-made and are adjustable by use of shims. Adjust until an oil clearance of .003" to .005" is established, using "Plastigage" strips. *(Available at your automotive parts distributor.)*

To replace the connecting rod bushing, press out the old bushing, and press in a new bushing. If a tight fit is not obtained, it will be necessary to replace the connecting rod. Ream the bushing after pressing it into the connecting rod - until it fits the wrist pin snugly, but does not bind.

Crankshaft Throw Diameter
. . . . . .3.499" to 3.500"
Crosshead Diameter (*For Pin*)
. . . . . .1.7490" to 1.7495"
Crosshead Diameter (*O. D.*)
. . . . . .4.493" to 4.496"
Wrist Pin Diameter
. . . . . .1.7500" to 1.7505"

Connecting Rod Bore-At Wrist Pin Bushing
. . . . . .2.125" to 2.126"
Connecting Rod Bore-At Shell Bearing
. . . . . .4.001" to 4.003"
Maximum allowable running clearances *(New Pump)* are as follows:
Crosshead O.D. fit on Power Frame
. . . . . .010" Clearance on Dia.
Wrist Pin Fit in Bushing
. . . . . .002" Clearance on Dia.
Connecting Rod Bearings & Crankshaft
. . . . . .005" Clearance on Dia.
Crankshaft Center Bearings (*Quintuplex*)
. . . . . .005" to .007" on the side
. . . . . .010" to .014" on Dia.

Interference fits are as follows:
Wrist Pin Fit in Crosshead
. . . . . .0015" to .0005" Tight
Wrist Pin Bushing Fit in Conn. Rod
. . . . . .0015" to .0005" Tight
Outer Race Fit in Bearing Housing (*Timken*)
. . . . . .Zero to .002" Tight
Inner Race Fit on Crankshaft (*Timken*)
. . . . . .0015" to .0005" Tight
Center Bearing Fit in Frame *(Quintuplex Only)*
. . . . . .001" to .005" Tight

STUFFING BOX

The stuffing box in these pumps is integral. This stuffing box will accept the entire range of plungers, 2¼" thru 3", inclusive.

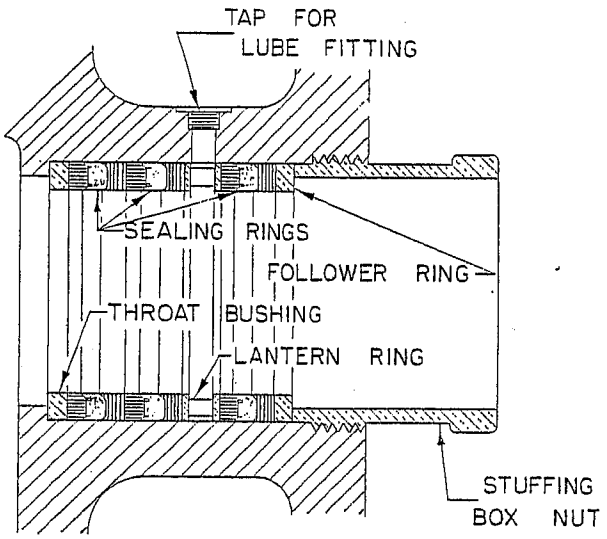

CROSS-SECTION OF STUFFING BOX

Fig. 12

WHEN CHANGING PACKING

(Universal non-adjustable packing, style 835, 838, 842, 845, etc.) Remove all old packing, clean the stuffing box throughly. Inspect it for wear. To repack the stuffing box, insert throat bushing and follow it with the packing unit, which has a top and bottom adapter. Care should be taken to install the packing so that the lips of each sealing ring face toward the fluid pressure. Install the parts in this order: Throat bushing, packing unit, consisting of two seal rings, each of which has a top and bottom adapter ring, then the lantern ring followed by a seal ring and its adapter rings, and a follower ring.

After packing is in place, screw the gland nut into the box until it is hand-tight! Check all plungers and clean if necessary. Replace plungers showing pits or scoring. Plungers may be cleaned with solvent and fine emery cloth. Install plungers using a pipe wrench on the knurled section with plenty of force. *Plungers must be kept tight!*

Roll pump over slowly under no load for several minutes. Observe results at stuffing box. If force-feed lubricator is used, be sure it is actually delivering oil to stuffing box. Tighten stuffing box nut, and after one hour's operation, retighten packing throughly. *Stuffing box nuts must be kept tight!*

A good procedure is to apply oil liberally to each plunger, using an oil can, while packing is being "*broken-in*", to avoid heating.

"Universal" 265 packing is an adjustable, self-lubricating type packing. Periodical adjustment is required to maintain proper tightness. Filling the oil lubrication hole with *"ren"* epoxy compound is necessary to prevent extrusion. Arrangement of packing rings is important.

Pay particular attention to the sequence of assembly of the various rings. Adhere to the sequence shown under the column headed *"Assembly"*, below. Fig. 13 and the following chart will aid in proper installation.

"UNIVERSAL" 265 PACKING ASSEMBLIES

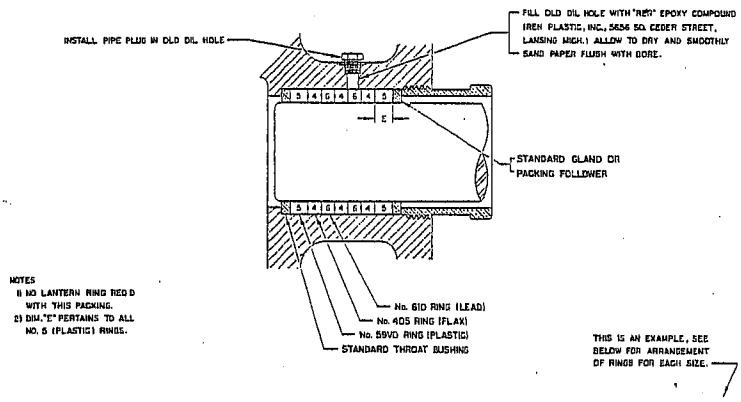

Fig. 13

SIZE O.D. x I.D. x Length	#610 Rings Req'd	#405 Rings Req'd	59VD Bearing Rings Req'd & Molds	Dim. "E"	Assembly
3 x 2-1/4 x 3-1/4	3	3	2	1/2	54646645
3 x 2-1/2 x 2-7/8	3	4	3	3/8	5464546645
3-1/2 x 2-3/4 x 2-7/8	2	3	2X - 1170	1/2	5464645
3-1/2 x 3 x 2-7/8	2	5	3X - 1691	3/8	5464546445

WHEN ORDERING PARTS

When ordering parts be sure to furnish the pump figure number and serial number. Also specify size or special materials, if any, with description of part desired. Use the complete part numbers shown on the parts drawings provided herein. Include *all* digits shown in the part number to insure prompt, accurate handling of your order. *(Do not use the item, or reference number. Will only confuse your order.)*

WHEN TROUBLE ARISES --- FOLLOW THIS TABLE

SYMPTOM	POSSIBLE SOURCE
Erratic pounding; valve springs breaking	Pump not filling, or when operating at higher speeds fluid becomes turbulent entering pump suction. If a new installation, or if plunger size or speed changed, check paragraph on suction line installation. If old installation, check suction line to see that all valves are open. Check for leaks in line; check for any restrictions in line. If suction strainer used, check this first. Also check for possibility of fluid vaporizing, or gas breaking out of fluid in the case of dissolved gas.
Consistent knock	Check for worn or loose bearings following outlined instructions. Check valves and plunger. NOTE: High-speed pumps will have valve noise – even in a new pump. This is normal, and it need be checked only if erratic. Pulsation dampener inoperative. Check pre-charge. Plunger threads loose. Wrist pin bushing worn. Pump operating backwards.
Loss of pressure or volume	Same as above. Also check foreign matter holding valves open and broken valve springs or worn valves. In case of excessive spring breakage, check suction installation. Check relief valve, it may be open or cracking slightly. Air entering suction system. Worn valves or seats.
Packing failure *(Excessive)*	Improper installation *(See instructions)*. Improper lubrication. Excessive temperature of fluid being pumped. Packing installed backwards. Rough, or scored plungers. Bent plungers.
Wear of fluid end parts *(Excessive)*	Abrasive or corrosive action of the fluid. Air entering suction system.
Wear of power end parts *(Excessive)*	Poor lubrication, overloading. Check lube oil for water, sand, etc. Follow monthly maintenance section.
Heat in power end	A new pump may run hot for a few days. Check lubrication system for proper operation. Check oil used in crankcase. See maintenance section. Normal operating temperature is from 140 degrees to 185 degrees F. Oil level low. Overloaded. Wrong size plungers. Too much oil in crankcase.
Lack of suction	Relieve pressure on discharge of pump by opening by-pass until a steady stream is flowing. Check foot valve for plugging. NOTE: Pumps not guaranteed for suction lift without written exception by Wheatley Company.
Inconsistent pressure, or erratic knocking	Pump holds pressure. Then suddenly drops it. Then resumes pressure. Pump sucking air through relief valve *(especially shear type)*. Do not pipe relief line into pump suction. Run separate line to supply tank. Leakage of air into suction system. Broken valve spring.

FIG. P-330A FLUID END

2¼" – 3" x 3⅛" TRIPLEX PLUNGER PUMP

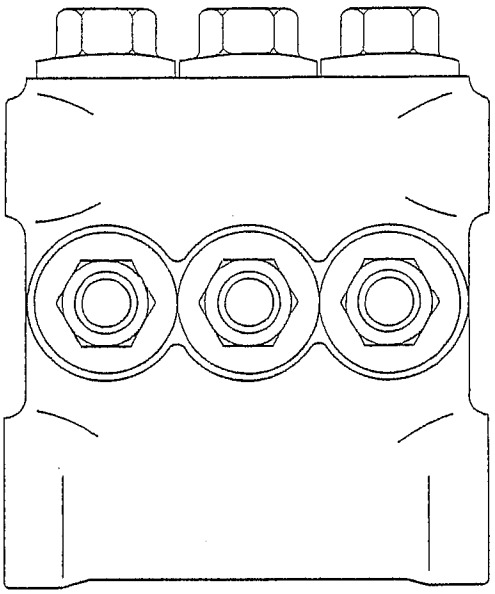

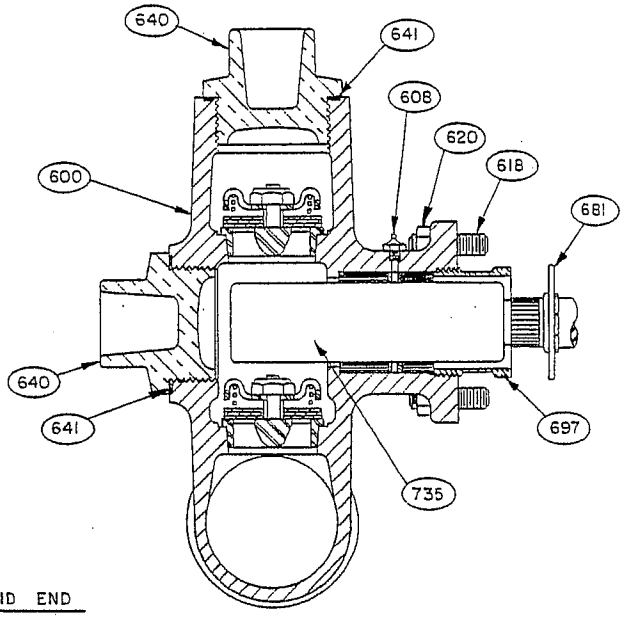

CAST FLUID END

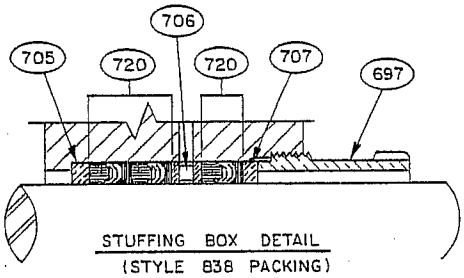

STUFFING BOX DETAIL
(STYLE 838 PACKING)

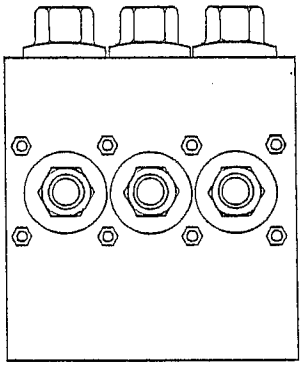

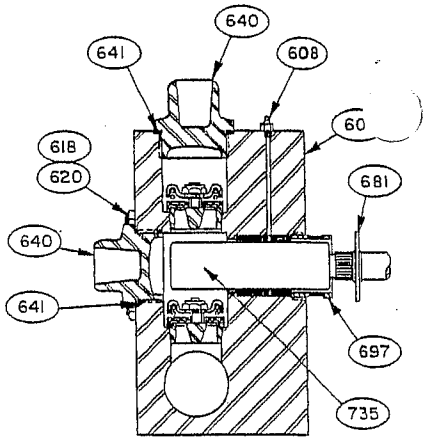

STEEL FLUID END

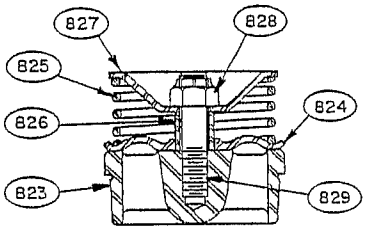

FORMED DISC VALVE

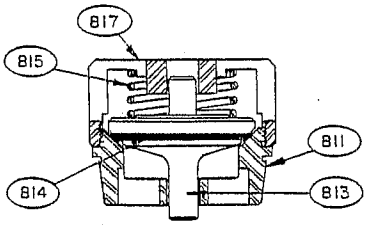

SYNTHETIC SEAL VALVE

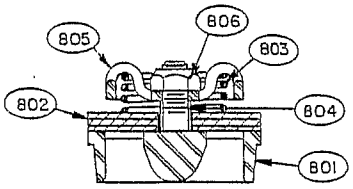

CELCON DISC VALVE

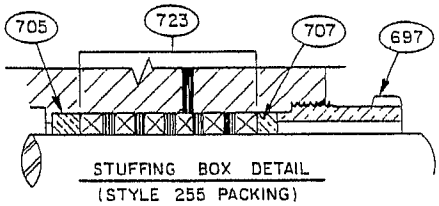

STUFFING BOX DETAIL
(STYLE 255 PACKING)

DLM 3-19-85

1-14497

Date: 3-20-85

Supersedes _____

use with Dwg. 1-14497

PARTS LIST FOR MODEL P-330A FLUID END

2 1/4"- 3" x 3 1/8" TRIPLEX PLUNGER PUMP

ITEM NO.	PART NUMBER	MATL. AVAIL.	QTY.	PART DESCRIPTION
				FLUID END
600	008-013247-XXX	B,D	1	Fluid End Body
	008-014408-220	S	1	Fluid End Body
608	180-165000-220	-	3	Lubrication Fitting
*616	438-008138-405	-	2	Dowel Pin
618	104-034234-271	-	8	Stud (Brz. & Ductile F.E.)
	001-012801-271	-	8	Stud (Steel F.E.)
620	133-034010-243	-	8	Nut
640	002-012800-XXX	B,D	6	Cylinder Head
641	204-000104-206	-	6	Gasket
681	001-007986-201	-	3	Baffle Disc
* 685	001-005843-282	-	1	Name Plate
* 686	126-004014-220	-	4	Drive Screw
* 693	002-017850-353	D	1	Spanner Wrench
				STUFFING BOX GLAND NUT
697	001-003497-XXX	B,D	3	Gland Nut
				THROAT BUSHING ; STYLE 838 Packing
705	001-012921-XXX	B,S	3	2-1/4" Throat Bushing
	001-007783-XXX	B,S	3	2-1/2" Throat Bushing
	001-011061-XXX	B,S	3	2-3/4" Throat Bushing
	001-003819-XXX	B,S	3	3" Throat Bushing
				THROAT BUSHING ; STYLE 255 Packing
705	001-024049-XXX	B,S	3	2-1/4" Throat Bushing
	001-007783-XXX	B,S	3	2-1/2" Throat Bushing
	001-024052-XXX	B,S	3	2-3/4" Throat Bushing
	001-003819-XXX	B,S	3	3" Throat Bushing
				LANTERN RING ; STYLE 838 Packing
706	001-012843-XXX	B,S	3	2-1/4" Lantern Ring
	001-012844-XXX	B,S	3	2-1/2" Lantern Ring
	001-011062-XXX	B,S	3	2-3/4" Lantern Ring
	001-004947-XXX	B,S	3	3" Lantern Ring
				FOLLOWER ; STYLE 838 Packing
707	001-012921-XXX	B,S	3	2-1/4" Follower
	001-007783-XXX	B,S	3	2-1/2" Follower
	001-011061-XXX	B,S	3	2-3/4" Follower
	001-003819-XXX	B,S	3	3" Follower
				FOLLOWER ; STYLE 255 Packing
707	001-024049-XXX	B,S	3	2-1/4" Follower
	001-024050-XXX	B,S	3	2-1/2" Follower
	001-024052-XXX	B,S	3	2-3/4" Follower
	001-024051-XXX	B,S	3	3" Follower
				PACKING SET STYLE 838
720	214-214206-370	-	3	2-1/4" Packing
	214-212206-370	-	3	2-1/2" Packing
	214-234214-370	-	3	2-3/4" Packing
	214-300214-370	-	3	3" Packing
				PACKING SET STYLE 255
723	309-214214-395	-	3	2-1/4" Packing
	309-212238-395	-	3	2-1/2" Packing
	309-234238-395	-	3	2-3/4" Packing
	309-300212-395	-	3	3" Packing
*715	170-018002-220	-	3	Plug (Replaces Lube Fitting when using Style 255 Packing)
				PLUNGERS
735	002-027481-999	-	3	2-1/4" Wheatsloy Plunger
	002-027482-999	-	3	2-1/2" Wheatsloy Plunger
	002-011065-999	-	3	2-3/4" Wheatsloy Plunger
	002-003807-999	-	3	3" Wheatsloy Plunger
* 736	002-027479-999	-	3	2-1/4" Ceramic Plunger
	002-027480-999	-	3	2-1/2" Ceramic Plunger
	002-010552-999	-	3	2-3/4" Ceramic Plunger
	002-010553-999	-	3	3" Ceramic Plunger

ITEM NO.	PART NUMBER	MATL. AVAIL.	QTY.	PART DESCRIPTION
				VALVES
				Celcon Disc Stainless Steel
800	998-016330-013	-	6	Complete Valve Assembly
				Valve Assembly Includes The Following Items:
801	001-003591-263	SS	1	Seat
802	001-010975-320	-	1	Disc
803	001-008734-362	-	1	Spring
804	186-170058-263	SS	1	Sleeve
805	001-005735-263	SS	1	Retainer
806	150-012013-263	SS	1	Nut
				Polyurethane Seal, Stainless Steel
810	998-016330-029	-	6	Complete Valve Assembly
				Valve Assembly Includes The Following Items:
811	002-012383-263	SS	1	Seat
813	002-012382-263	SS	1	Body
814	110-000227-503	-	1	O-Ring
815	001-008734-362	-	1	Spring
817	002-012384-263	SS	1	Retainer
				Formed Disc, Stainless Steel
822	998-016331-031	-	6	Complete Valve Assembly
				Valve Assembly Includes The Following Items:
823	001-021146-263	SS	1	Seat
824	001-021142-263	SS	1	Disc
825	001-021144-362	-	1	Spring
826	001-021145-263	-	1	Sleeve
827	001-021143-263	SS	1	Retainer
828	150-012013-263	SS	1	Nut
829	102-012218-263	-	1	Stud
				OPTIONAL EQUIPMENT
* 818	002-021268-400	-	1	Valve Cage Wrench for Poly. Seal Valve
* 889	001-027585-999	-	1	Cylinder Head Wrench
* 890	998-016330-017	-	1	Valve Seat Puller for Item 801 and 823
* 890	998-016330-027	-	1	Valve Seat Puller for Item 811

Last Three Digits XXX

On Parts with Optional Materials, Where XXX is Shown, Replace XXX with the Following Digits For:

Steel - - - - - - Use 220
Bronze - - - - - Use 306
Ductile - - - - - Use 353
Stainless Steel - Use 263

Material Available

B = Bronze
D = Ductile Iron
S = Steel
SS = Stainless Steel
- = No Material Selection Necessary

* Not Shown on Parts Drawing

Note: When Ordering Parts, Give:

1) Pump Serial Number
2) Pump Model Number
3) Part Number
4) Quantity
5) Part Name
6) Item Number
7) Trim Size
8) Material

WHEATLEY PUMPS
Tulsa, Oklahoma

FIG. P-300 POWER END
TRIPLEX PLUNGER PUMP

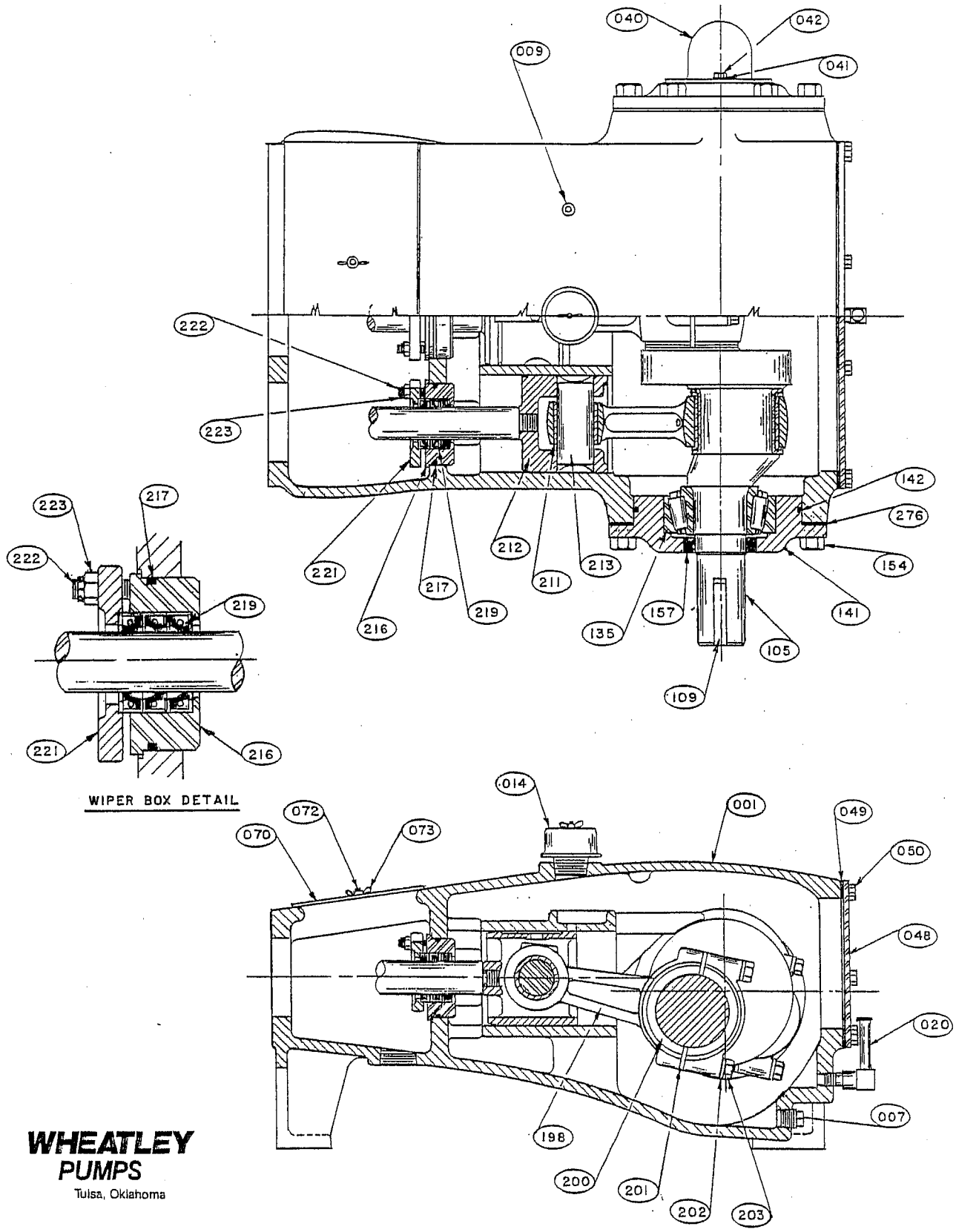

WHEATLEY PUMPS
Tulsa, Oklahoma

NOTE:
THIS POWER END IS ADAPTABLE TO THE FOLLOWING
FLUID ENDS: P-313 SERIES, P-323, P-330A, & P-364

RONH 2-27-85

1-11916

Date: 2-28-85

Use with Drawing 1-11916

Supersedes _____

PARTS LIST FOR
MODEL P-300 POWER END

ITEM NO.	PART NUMBER	MAT. AVAIL	NO. REQ'D	PART NAME
	POWER END			
001	004-010544-353	I	1	Power Frame
007	170-012005-353	-	1	Drain Plug
009	170-014003-220	-	2	Plug
014	001-013059-999	-	1	Air Breather
020	001-010803-999	-	1	Oil Gauge
** 040	001-007971-282	-	1	Extension Guard
** 041	154-014049-220	-	2	Lock Washer
** 042	113-014038-220	-	2	Cap Screw
048	001-007965-231	-	1	Crankcase Cover
049	001-007966-204	-	1	Gasket
050	100-038012-273	-	10	Cap Screw
070	002-010717-231	-	1	Barrel Cover
072	104-038100-286	-	2	Stud
073	187-038016-286	-	2	Nut
105	004-007950-353	D	1	Crankshaft
109	146-058234-236	-	1	Key
135	120-256053-999	-	2	End Bearing
141	002-007961-353	I	2	Bearing Housing
142	110-000264-201	-	2	O-Ring
154	100-058112-273	-	12	Cap Screw
157	145-212312-999	-	2	Oil Seal
198	002-007955-353	I	3	Connecting Rod & Cap
200	002-001292-999	-	3	Shell Bearing
201	001-007959-999	-	6	Shim
202	154-012087-220	-	6	Lock Washer
203	100-012234-273	-	6	Cap Screw
211	001-007953-306	B	3	Bushing
212	002-007957-353	I	3	Crosshead
213	001-007954-220	S	3	Wrist Pin
216	001-007963-220	S	3	Wiper Box
217	110-000238-201	-	3	O-Ring
219	145-158238-999	-	9	Oil Seal
221	001-007968-353	I	3	Gland
222	102-038134-271	-	6	Stud
223	150-038016-306	-	6	Nut
276	998-016300-037	-	1	Shim Gasket Kit
	OPTIONAL PARTS AND KITS			
9050	998-016300-039	-	1	Power End Gasket Kit (Kit Consists of Items 049, 142, 157, 217 & 276)
278	998-016300-036	-	3	Wiper Box Gland Kit (Kit Consists of Items 221, 222 & 223)
279	998-016300-035	-	3	Connecting Rod Kit (Kit Consists of Items 198, 202, 203 & 211)
*9022	998-016300-024	-	1	Lubricator & Drive (L.H. Drive Pumps)
*9023	998-016300-064	-	1	Lubricator & Drive (R.H. Drive Pumps)
*9025	988-016300-019	-	1	Lubricator & Drive (L.H. Drive; To Drip on Back of Plunger)
*9026	998-016300-020	-	1	Lubricator & Drive (R.H. Drive; To Drip on Back of Plunger)

* Not Shown on Parts Drawing
** Omit when Lubricator is used

Note: When Ordering Parts Give

1) Pump Serial Number
2) Pump Model Number
3) Part Number
4) Quantity
5) Part Name
6) Item Number
7) Trim Size
8) Material

Material Available Code

B = Bronze
D = Ductile Iron
I = Iron
S = Steel
- = No Material Selection Necessary

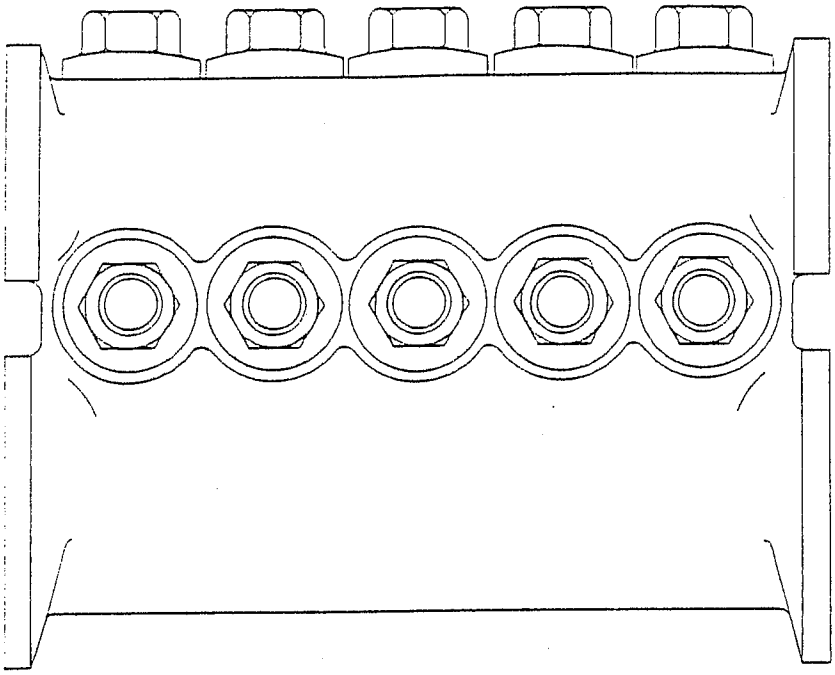

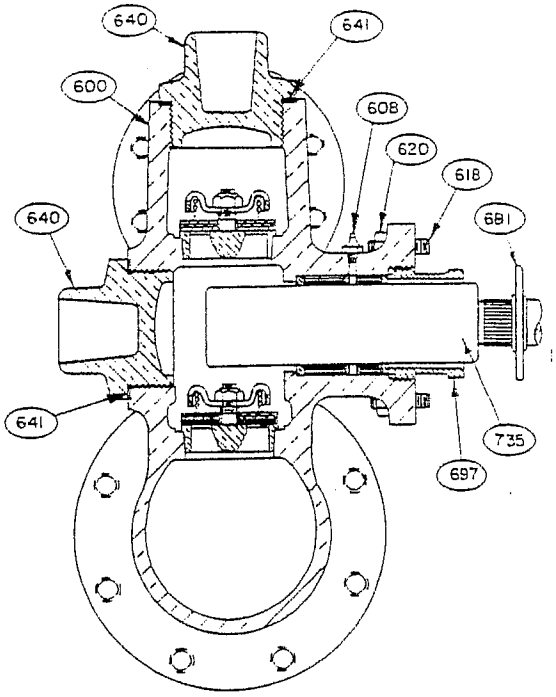

CAST FLUID END

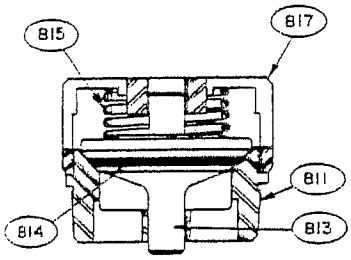

SYNTHETIC SEAL VALVE

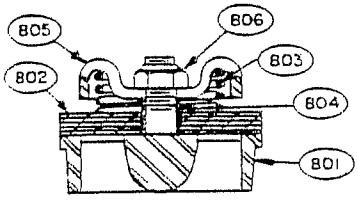

CELCON DISC VALVE

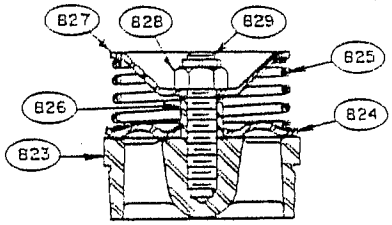

FORMED DISC VALVE

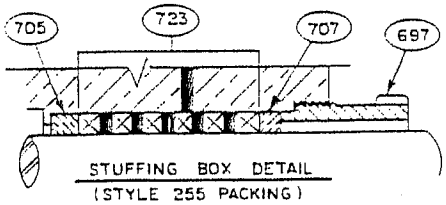

STUFFING BOX DETAIL
(STYLE 255 PACKING)

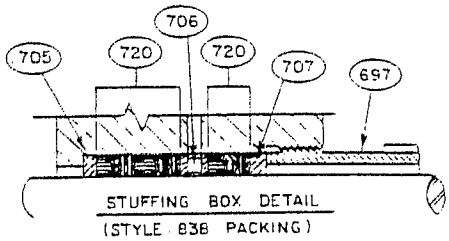

STUFFING BOX DETAIL
(STYLE 838 PACKING)

WHEATLEY
PUMPS
Tulsa, Oklahoma

MODEL 5P330A & HP125L
FLUID END PARTS LIST
CAST FLUID END

ITEM NO.	PART NUMBER	QTY.	PART DESCRIPTION/SIZE	
			FLUID END	
600	008-013023-XXX	1	F.E. Body	B= 316, D=351
608	180-165000-220	5	Lubrication Fitting	
	170-018002-278	5	Pipe Plug	
* 616	147-038034-220	2	Dowel Pin	
618	104-034212-286	12	Stud	
620	133-034010-286	12	Nut	
640	002-012800-XXX	10	Cyl. Head	B=316, D=351
641	204-000104-206	10	Gasket	
681	001-007986-201	5	Baffle Disc	
* 685	AAB-115716-405	1	Name Plate	
* 686	126-006516-405	4	Drive Screw	
* 693	002-017850-353	1	Spanner Wrench	
697	STUFFING BOX GLAND NUT			
	001-003497-XXX	5		B=301, D=351
705	THROAT BUSHING			
	For "J" Style Packing			
	001-012921-XXX	5	2-1/4"	
	001-007783-XXX	5	2-1/2"	B=302
	001-011061-XXX	5	2-3/4"	S=235
	001-003819-XXX	5	3"	SS-278
	For "BRAID" & "SSF-4" Style Packing			
	001-024049-XXX	5	2-1/4"	
	001-007783-XXX	5	2-1/2"	B=302
	001-024052-XXX	5	2-3/4"	S=235
	001-003819-XXX	5	3"	SS=278
706	LANTERN RING			
	For "J" Style Packing			
	001-012843-XXX	5	2-1/4"	
	001-012844-XXX	5	2-1/2"	B=302
	001-011062-XXX	5	2-3/4"	S=235
	001-004947-XXX	5	3"	SS=278
707	FOLLOWER			
	For "J" Style Packing			
	001-012921-XXX	5	2-1/4"	
	001-007783-XXX	5	2-1/2"	B=302
	001-011061-XXX	5	2-3/4"	S=235
	001-003819-XXX	5	3"	SS=278
	For "BRAID" & "SSF-4" Style Packing			
	001-024049-XXX	5	2-1/4"	
	001-007783-XXX	5	2-1/2"	B=302
	001-024052-XXX	5	2-3/4"	S=235
	001-003819-XXX	5	3"	SS=278
720	"J" STYLE PACKING			
	214-214206-XXX	5	2-1/4"	Style 838=370
	214-212206-XXX	5	2-1/2"	Style 842=386
	214-234214-XXX	5	2-3/4"	Style 845=374
	214-300214-XXX	5	3"	
723	"BRAID" STYLE PACKING			
	214-214206-XXX	5	2-1/4"	Style 238=395
	214-212206-XXX	5	2-1/2"	Style 241=338
	214-234214-XXX	5	2-3/4"	Style 249=339
	214-300214-XXX	5	3"	Style 8921-K=458
730	"SSF-4" STYLE PACKING			
	429-214244-XXX	5	2-1/4"	Style 1068-4=340
	429-212244-XXX	5	2-1/2"	
	429-234256-XXX	5	2-3/4"	
	429-300256-XXX	5	3"	

ITEM NO.	PART NUMBER	QTY.	PART DESCRIPTION/SIZE	
729	"SSF-4" Style, Rings Only			
	429-214114-XXX	10	2-1/4"	Style 1068-1=340
	429-212100-XXX	10	2-1/2"	
	429-234034-XXX	10	2-3/4"	
	429-300012-XXX	10	3"	
			PLUNGERS	
735	COATED			
	002-027481-XXX	5	2-1/4"	
	002-027482-XXX	5	2-1/2"	COLMONOY #6=999/E22
	002-011065-XXX	5	2-3/4"	TUNG./S157=E26
	002-003807-XXX	5	3"	ROKIDE=E24
	SOLID CERAMIC			
	002-027479-XXX	5	2-1/4"	
	002-027480-XXX	5	2-1/2"	STANDARD=999/E30
	002-010552-XXX	5	2-3/4"	PREMIUM = 990
	002-010553-XXX	5	3"	
			SUCTION & DISCHARGE VALVE ASSEMBLIES	
800	998-016330-013	10	CELCON DISC/SS Assembly	
	Each assembly consists of the following items			
801	001-003591-261	1	Seat	
802	001-010975-320	1	Disc	
803	001-008734-362	1	Spring	
804	186-170058-365	1	Sleeve	
805	001-005735-261	1	Retainer	
806	150-012013-278	1	Nut	
800	998-516331-034	10	SS PLATE/SS Assembly	
	Each assembly consists of the following items			
801	001-021146-261	1	Seat	
802	001-027317-399	1	Disc	
803	001-021144-362	1	Spring	
804	001-021145-399	1	Sleeve	
805	001-021143-278	1	Retainer	
806	150-012013-278	1	Nut	
	102-012218-263	1	Stud	
840	001-027952-999	10	Abrasion Resistant/SS Assembly	
	Each assembly consists of the following items			
811	001-027952-001	1	Seat	
812	001-027952-002	1	O-Ring	
813	001-027952-004	1	Body	
814	001-027952-003	1	Insert	
815	001-027952-005	1	Spring	
817	001-027952-006	1	Cage/Retainer	
			OPTIONAL EQUIPMENT	
* 889	001-027585-999	1	Cylinder Head Wrench	
* 890	998-Q3150M-092	1	Valve Seat Puller for Items 801 & 823	
* 890	998-Q3150M-091	1	Valve Seat Puller for 811	

* NOT SHOWN ON PARTS DRAWING

MATERIALS AVAILABLE:
- B = Bronze
- D = Ductile Iron
- S = Steel
- SS = Stainless Steel

NOTE: When ordering parts give:
1) Pump Serial Number
2) Pump Model Number
3) Part Number
4) Quantity
5) Part Description
6) Item Number
7) Trim Size
8) Material

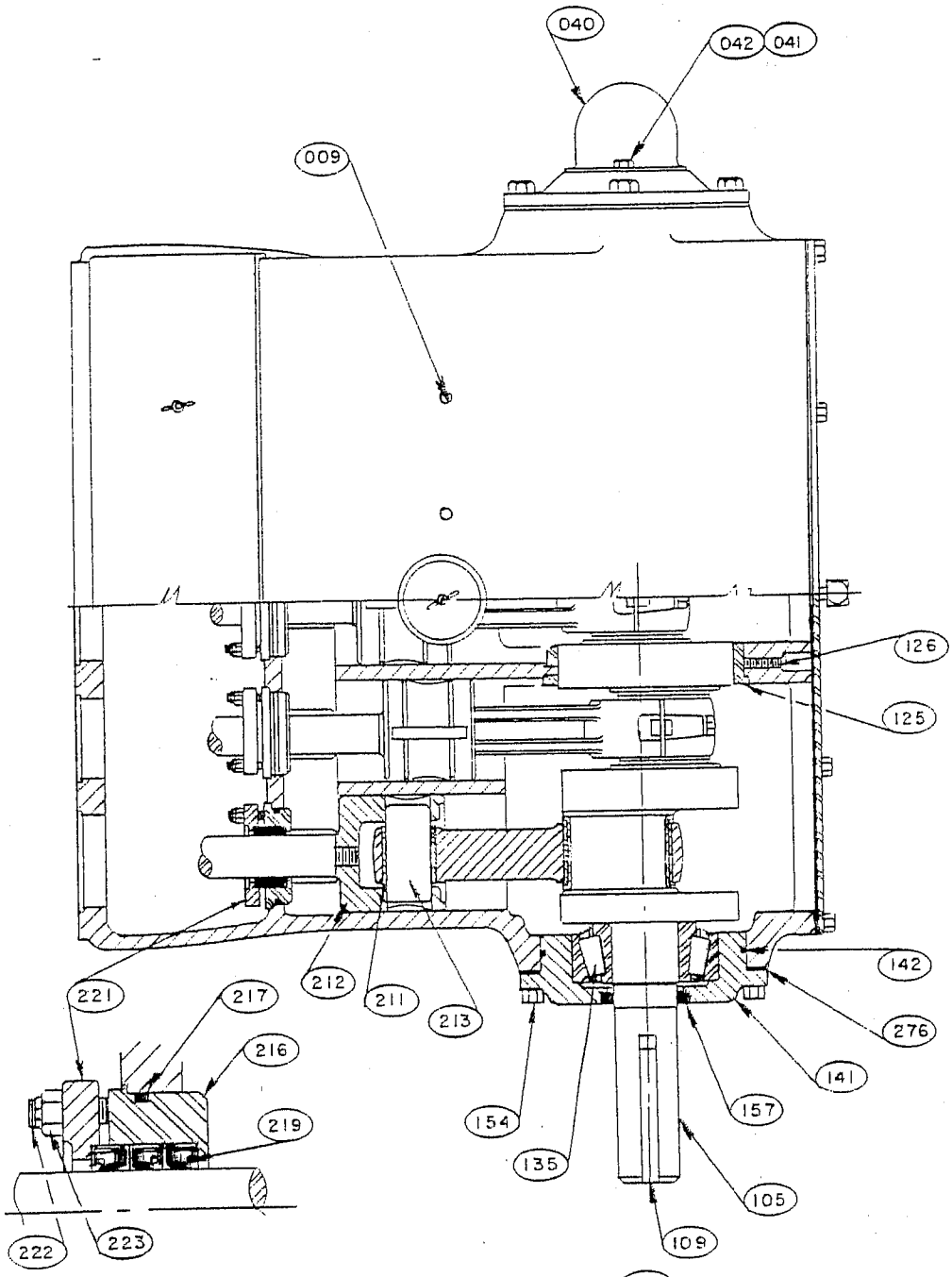

WIPER BOX DETAIL

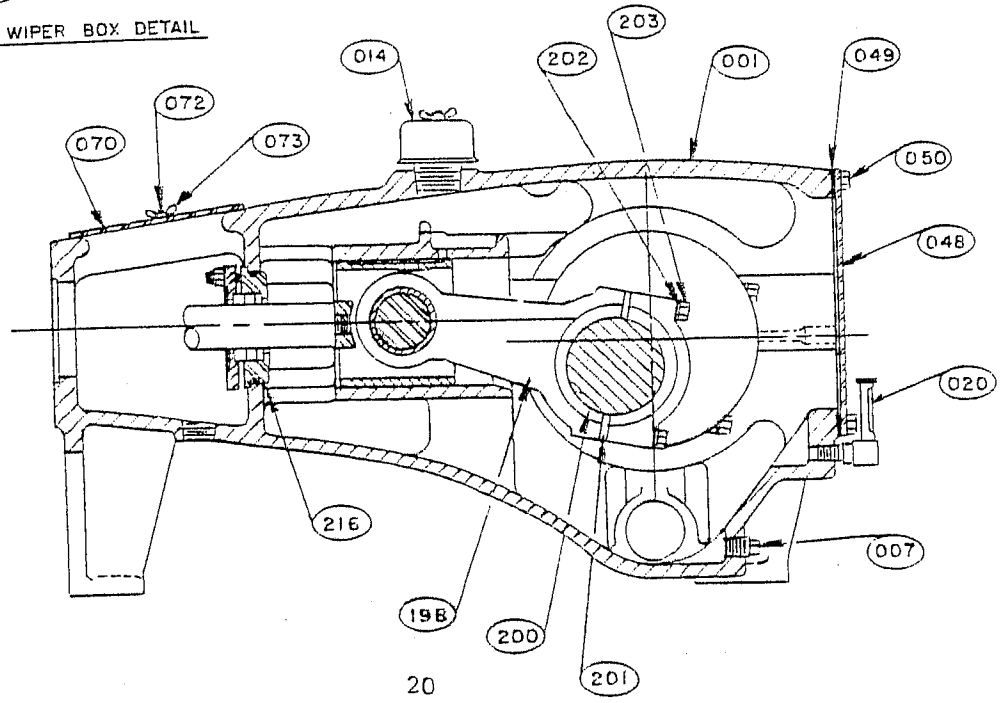

WHEATLEY
Tulsa, Oklahoma

5P-300
POWER END

ITEM NO.	PART NUMBER	QTY.	PART DESCRIPTION
001	008-011160-356	1	POWER FRAME
007	170-012005-353	1	DRAIN PLUG
009	170-014003-220	4	PLUG
014	001-013059-999	1	AIR BREATHER
020	001-010803-999	1	OIL LEVEL GAUGE
** 040	001-007971-282	1	EXTENSION GUARD
** 041	154-014049-220	2	LOCK WASHER
** 042	113-014038-220	2	MACHINE SCREW
048	001-011253-231	1	CRANKCASE COVER
049	001-011251-204	1	GASKET
050	100-038034-273	16	CAP SCREW
066	170-114003-220	2	PIPE PLUG
067	170-034003-220	2	PIPE PLUG
070	001-011298-231	1	BARREL COVER
072	104-038100-286	2	STUD
073	187-038016-286	2	WING NUT
105	008-008724-351	1	CRANKSHAFT
109	146-058358-236	1	KEY
125	002-010516-999	2	CENTER BEARING
126	241-038114-273	2	SET SCREW
135	120-256053-999	2	END BEARING
141	002-007961-350	2	BEARING HOUSING
142	110-000264-201	2	O-RING
154	100-058112-286	12	CAP SCREW
157	145-212312-999	2	OIL SEAL
198	002-007955-350	5	CONNECTING ROD & CAP
200	002-001292-999	5	SHELL BEARING
201	001-007959-999	10	SHIM
202	154-012087-220	10	LOCK WASHER
203	100-012234-273	10	CAP SCREW
211	001-007953-302	5	BUSHING
212	002-007957-350	5	CROSSHEAD
213	001-007954-236	5	WRIST PIN
216	001-007963-237	5	WIPER BOX
217	110-000238-201	5	O-RING
219	145-158238-999	15	OIL SEAL
221	001-007968-350	5	GLAND
222	104-038134-286	10	STUD
223	150-038016-306	10	NUT
240	001-016981-237	2	O-RING PLUG
241	110-000210-201	2	O-RING
276	998-016300-037	1	SHIM GASKET KIT
---------- OPTIONAL PARTS AND KITS ----------			
* 125			UNDERSIZE MAIN BEARING:
	002-028517-999	2	-0.040"
* 200			UNDERSIZE SHELL BEARINGS:
	002-023504-999	5	-0.020"
	002-023505-999	5	-0.040"
278	998-016300-036	5	WIPER BOX GLAND KIT (CONSISTS OF ITEMS 222 & 223)
279	998-016300-035	5	CONNECTING ROD KIT (CONSISTS OF ITEMS 198, 202, 203 & 211)
* 9030	998-516300-007	1	PACKING LUBRICATOR KIT (LHD)
* 9031	998-516300-036	1	PACKING LUBRICATOR KIT (RHD)
9050	998-516300-011	1	POWER END GASKET KIT (CONSISTS OF ITEMS 049, 142, 157, 217 & 276)

NOTE: WHEN ORDERING PARTS GIVE

1) PUMP SERIAL NUMBER
2) PUMP MODEL NUMBER
3) PART NUMBER
4) QUANTITY
5) PART NAME
6) ITEM NUMBER
7) TRIM SIZE
8) MATERIAL

* NOT SHOWN ON PARTS DRAWING

** OMIT WHEN LUBRICATOR IS USED

REVISION DATE: 05-05-88

2-12174

FIG. HP-125 POWER END
QUINTUPLEX PLUNGER PUMP

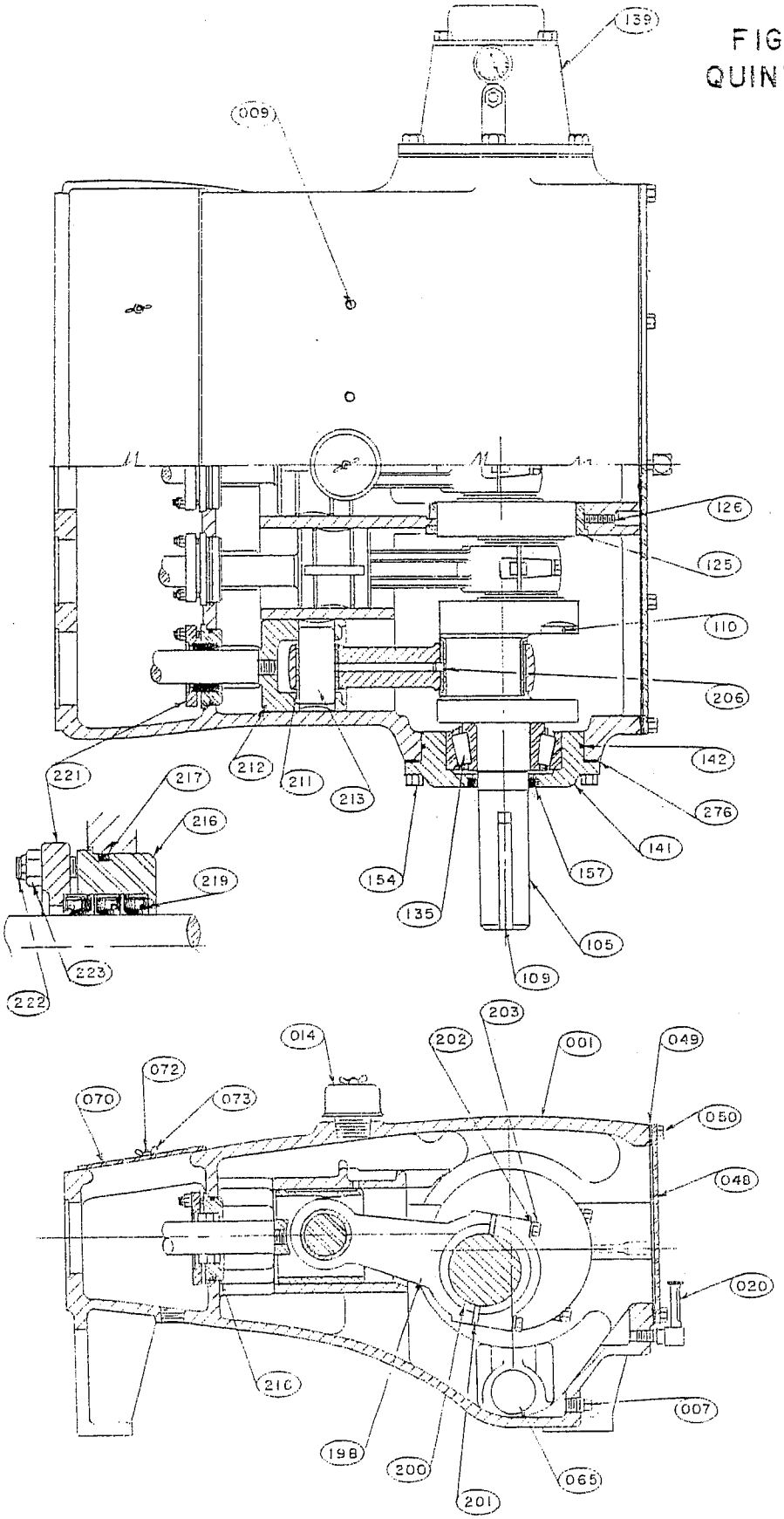

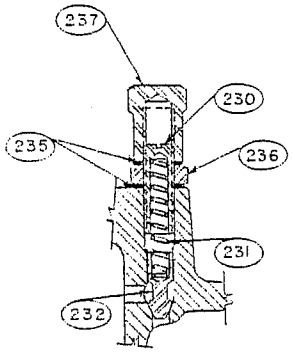

RELIEF VALVE DETAIL

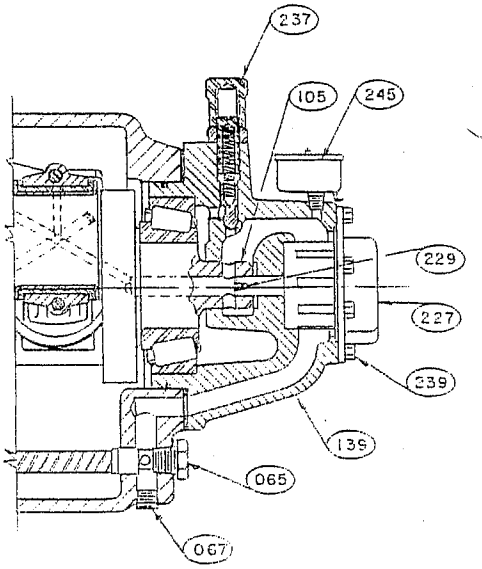

DETAIL OF LUBRICATION PUMP

WHEATLEY
PUMPS
Tulsa, Oklahoma

NOTE:
THIS POWER END IS ADAPTABLE TO THE FOLLOWING
FLUID ENDS: HP-125H SERIES, HP-125M, HP-125L

RONH 3-6-85

1-12186

Date: 3-15-85

Supersedes

use with Dwg. 1-12186

PARTS LIST FOR MODEL HP-125 POWER END

ITEM NO.	PART NUMBER	MAT. AVAIL	NO. REQ'D	PART NAME
				POWER END
001	008-011160-353	I	1	Power Frame
007	170-012005-353	-	1	Drain Plug
009	170-014003-220	-	4	Plug
014	001-013059-999	-	1	Air Breather
020	001-010803-999	-	1	Oil Gauge
048	001-011253-231	-	1	Crankcase Cover
049	001-011251-204	-	1	Gasket
050	100-038034-273	-	16	Cap Screw
065	002-016950-220	-	1	Oil Filter
*066	170-114003-220	-	1	Pipe Plug
067	170-034003-220	-	2	Pipe Plug
070	001-011298-231	-	1	Barrel Cover
072	104-038100-286	-	2	Stud
073	187-038016-286	-	2	Nut
105	008-011333-353	D	1	Crankshaft
109	146-034500-236	-	1	Key
110	170-018003-220	-	5	Plug
125	002-010516-999	-	2	Main Bearing
126	241-038114-273	-	2	Set Screw
135	120-325066-999	-	2	End Bearing
139	008-015833-353	I	1	Bearing Housing (Lube Pump Side)
141	002-011283-353	I	1	Bearing Housing (Shaft Side)
142	110-000264-201	-	2	O-Ring
154	100-058112-273	-	12	Cap Screw
157	145-318418-999	-	1	Oil Seal
198	004-011261-353	I	5	Connecting Rod & Cap
200	002-001292-999	-	5	Shell Bearing
201	001-011677-999	-	10	Shim
202	154-012087-220	-	10	Lock Washer
203	100-012234-273	-	10	Cap Screw
206	149-038034-406	-	5	Pin
211	001-007953-306	B	5	Bushing
212	002-007957-353	I	5	Crosshead
213	001-007954-220	S	5	Wrist Pin
216	001-007963-220	S	5	Wiper Box
217	110-000238-201	-	5	O-Ring
219	145-158238-999	-	15	Oil Seal
221	001-007968-353	I	5	Gland
222	102-038134-271	-	10	Stud
223	150-038016-306	-	10	Nut
227	001-012157-999	-	1	Lubrication Pump
229	001-014240-220	-	1	Pin
230	001-014242-271	-	1	Pressure Adjusting Screw
231	001-014241-363	-	1	Spring
232	001-014244-278	-	1	Relief Valve
235	001-014251-206	-	2	Washer
236	130-078014-243	-	1	Nut
237	001-014243-271	-	1	Cap
239	100-516034-273	-	8	Cap Screw
*240	001-016981-237	-	1	O-Ring Plug
*241	110-000210-201	-	1	O-Ring
*263	001-004837-282	-	1	Lubrication Name Plate
*264	126-004014-220	-	4	Drive Screw
245	001-011096-999	-	1	Switch
276	998-812500-006	-	1	Shim Gasket Kit
				OPTIONAL PARTS AND KITS
9050	998-812500-007	-	1	Power End Gasket Kit (Kit Consists of Items 049, 142, 157, 217, & 276)
278	998-016300-036	-	5	Wiper Box Gland Kit (Kit Consists of Items 221, 222 & 223)
279	998-812500-005	-	5	Connecting Rod Kit (Kit Consists of Items 198, 202, 203, 206 & 211)
999	002-018943-999	-	1	Oil Pressure Shut-Down Switch
*9030	998-812500-037	-	1	Lubricator & Drive (L.H. Drive Pumps)
*9031	998-812500-022	-	1	Lubricator & Drive (R.H. Drive Pumps)
*9028	988-812500-019	-	1	Lubricator & Drive (L.H. Drive; To Drip on Back of Plunger)
*9029	998-812500-020	-	1	Lubricator & Drive (R.H. Drive; To Drip on Back of Plunger)

Material Available Code

B = Bronze
D = Ductile Iron
I = Iron
S = Steel
- = No Material Selection Necessary

Note: When Ordering Parts Give

1) Pump Serial Number
2) Pump Model Number
3) Part Number
4) Quantity
5) Part Name
6) Item Number
7) Trim Size
8) Material

* Not Shown on Parts Drawing

ENGINEERING STANDARDS
"PREPARATION OF PUMPS FOR EXTENDED STORAGE"

GENERAL

Responsibility for storage protection of Wheatley pumps rests with the owner or custodian of the pump. Serious deterioration of close-fitting parts can and will occur to pumps in storage - **even though storage may be in a warehouse**, or other building. Moisture condensation is the culprit. It can quickly ruin expensive bearings, gears, shafts, oil seals, rods, liners, pistons, valves, springs, and seats. It is YOUR job to see that this does not happen!

DISTRIBUTOR STORAGE

Distributors for Wheatley pumps have a **dual** obligation to protect pumps in their storage:

First to the Customer, who is entitled to receive his new Wheatley pump in a "factory fresh" condition.

Second, to the Manufacturer who warrants the pump, Wheatley.

CUSTOMER'S RESPONSIBILITY

The customer's responsibility begins the day the customer takes title to his new Wheatley pump. If not placed promptly in service, the pump will quickly deteriorate — unless **prepared** for storage.

Hence, careless storage of pumps which results in rusting of the fine finishes, close tolerances, and careful assembly of the Wheatley pump will operate against this customer, when and if premature failure of such components does occur.

The Wheatley Warranty will not protect a careless customer who does not protect his pump before and during operation.

POWER END PROTECTION

Remove the piston rods (or plungers, or pony rods) from the crosshead. Plug the wiper box openings with smoothly tapered wood plugs. Drive the plugs tightly into the wiper box packing counterbore. Must be oil-tight!

Pumps having oil level gauges: Remove the gauge and close this opening with a pipe plug. Or, plug the dip stick hole — if pump utilizes a dip stick.

FILL THE ENTIRE POWER END COMPLETELY WITH CLEAN S.A.E. 40 OR 30 MOTOR OIL, OR TURBINE OIL (PER NAME PLATE).

Oil level must completely immerse all working parts, including all gear teeth, if pump has gears.

Plug the crankcase breather opening with a tightly fitted tapered wood plug to prevent entry of air, or plug with pipe plug if opening is tapped.

Coat shaft extensions and keys with a good commercial anti-rust compound, such as "Rust-Ban".

Remove V-belts from sheave. Coat sheave grooves with anti-rust compound.

If pump is equipped with a force-feed lubricator, fill the lubricator completely with oil. Remove lubricator drive belt and apply anti-rust compound to sheave grooves, and other machined surfaces.

FLUID END PROTECTION

Packing if left in place, has a very injurious effect on plungers or piston rods. Remove all packing and store in clean boxes in a dry place.

Apply anti-rust compound to stuffing box bore, gland nut threads and screw gland nuts into stuffing box.

If a piston pump, remove the valves, springs, liners, pistons, and rods. Coat all thoroughly. Apply compound to fluid end bores, valve seats, liner cages, and jack screw threads. Remove all cylinder drain plugs. Store rods, liners, valves, and springs in clean boxes in a dry place. Valve seats should be coated and left in pump.

Apply anti-rust compound to all studs, bolts, and nuts.

Store all fluid gaskets in clean boxes in a dry place. Avoid crimping or damage to gaskets and seals.

If the pump is plunger type, remove plungers and pony rods and box carefully. Plungers must be carefully handled and stored to avoid damaging or chipping their surfaces. Protect plunger and pony rod threads.

After making sure that all fluid end machined surfaces are carefully coated with rust-preventive, and that interior is dry, replace all covers, flanges, and heads. Plug suction and discharge flange openings using tightly fitted wood plugs, to exclude air and moisture.

ES-114
Date: 11-15-79
Supersedes 9-20-76

TERMS AND CONDITIONS

TERMS

(Unless Otherwise Specified in Writing)

NET DUE 30 DAYS FROM DELIVERY DATE

CONDITIONS

NO TERMS OR CONDITIONS, OTHER THAN THOSE STATED HEREIN, AND NO AGREEMENT OR UNDERSTANDING, ORAL OR WRITTEN, IN ANY WAY PURPORTING TO MODIFY THESE TERMS AND CONDITIONS, WHETHER CONTAINED IN BUYER'S PURCHASE OR SHIPPING RELEASE FORMS, OR ELSEWHERE, SHALL BE BINDING ON SELLER AND ANY SUCH ATTEMPTED MODIFICATIONS ARE HEREBY REJECTED BY SELLER , ALL PROPOSALS, NEGOTIATIONS, AND REPRESENTATIONS, IF ANY, MADE PRIOR, AND WITH REFERENCE HERETO, ARE MERGED HEREIN.

All quotations and sales are FOB point of shipment unless otherwise specified on the face hereof, Seller's responsibility ceases upon delivery to carrier and title shall transfer and risk of lost goods shall be borne by Buyer at that point. Any Hot Shot or other premium transportation charges requested by Buyer will be for the account of Buyer. A minimum shipping and handling charge shall apply on any order of less than $500.00. Prices are subject to adjustment to reflect the Seller's prices in effect at time of shipment. No claims for price adjustments will be honored unless presented within one year from date of invoice. All quotations are subject to change without notice and to prior sale of goods.

THERE ARE NO WARRANTIES WHICH EXTEND BEYOND THE DESCRIPTION ON THE FACE HEREOF. THIS WARRANTY IS GIVEN EXPRESSLY AND IN PLACE OF ALL OTHER EXPRESS OR IMPLIED WARRANTIES AND ALL IMPLIED WARRANTIES FOR MERCHANTABILITY AND FITNESS FOR A PARTICULAR PURPOSE ARE DISCLAIMED.

Goods manufactured by others are sold "as is" except to the extend the manufacturer honors any applicable warranty made by the manufacturer. Secondhand goods are sold "as is". Leased goods, new or used, are leased "as is".

In the event any goods manufactured by Seller and furnished hereunder are found to be defective or otherwise fail to conform to the conditions of this contract, Seller will, at its option, either: (1) replace the goods at the delivery point specified herein, (2) repair the goods, or (3) refund the purchase price. Buyer's remedies with respect to goods manufactured by Seller and furnished hereunder that are found to be defective or otherwise not in conformity with the contract shall be limited exclusively to the right to have said goods replaced, repaired, or to a refund of the purchase price, at Seller's option, Buyer's remedies with respect to goods manufactured by others and furnished hereunder that are found to be defective or otherwise not in conformity with the contract are limited to any warranties extended and honored by the manufacturer, Buyer's remedies are limited as aforesaid regardless of whether Buyer's claim is based on principles of contract or tort. Claims must be made promptly following delivery of the goods to the Buyer, but within one year from date of tender of delivery. Seller must be given a reasonable opportunity to investigate. NEITHER SELLER NOR THE MANUFACTURER SHALL HAVE ANY LIABILITY FOR SPECIAL, INDIRECT, CONSEQUENTIAL, INCIDENTAL, OR OTHER CLAIMS ARISING FROM ANY BREACH OF CONTRACT OR TORT COMMITTED BY SELLER OR THE MANUFACTURER OF GOODS RESOLD BY SELLER. Buyer agrees that it is to be solely responsible for, and will hold Seller, and the manufacturer of any goods resold by Seller, harmless from any claims, regardless of their basis, by Buyer or third parties that may arise from the goods after delivery, except for replacement, repair, or refund of the purchase price, at Seller's option, for Seller manufactured goods or as provided in any warranties extended and honored by the manufacturer on goods manufactured by others as provided above. Seller's total cumulative liability in any way arising from or pertaining to any products sold or required to be sold under this contract, shall not in any case exceed the purchase price paid by the Buyer for such product.

With respect to any work performed on goods furnished by Buyer (including but not limited to repairing, welding, machining, fabricating, heat treating, and forging) Seller agrees to make every effort to perform fully such work in accordance with Buyer's specifications. Seller shall be responsible for damages to such goods caused only by Seller's negligence, in which case Buyer's remedy shall be limited exclusively to the price of the work to be performed by Seller on the article damaged. Claims must be made promptly following delivery of the goods to Buyer, but within three months from the date the same is put into operation and, in any event, not more than one year after date of tender of delivery. Seller must be given a reasonable opportunity to investigate. Seller shall have no liability for special, indirect, consequential, incidental or other damages arising from any breach of contract or tort.

All federal, state, dominion, provincial or municipal taxes now or hereafter imposed in respect to the goods sold by the Seller and/or the processing, manufacture, delivery, transportation and/or proceeds of the goods herein specified shall be for the account of the Buyer and if taxes are required to be paid by the Seller, the amount thereof shall be added to and become part of the price payable by the Buyer.

Payment shall be made at par in legal tender of the United States of America. Buyer shall make such arrangements for terms of payment as Seller's treasurer shall from time to time require. All orders are subject to the continued review of the Seller and if, in its opinion, the financial position of the Buyer has so changed prior to delivery as to render the Seller insecure, the Seller may suspend production and/or refuse to make delivery pending satisfactory modification of the terms of payment. If in the event it becomes necessary to place the account in the hands of an attorney for collection, Buyer agrees to pay reasonable attorney's fees incurred by the Seller. Buyer shall pay interest of 18% per annum for all accounts after the due date; provided, however in no event shall Buyer be required to pay any amount beyond the maximum allowed by law.

In the event of any delay in Seller's performance due to fire, explosion, strike, shortage of utility, facility, material or labor, delay in transportation, breakdown or accident, compliance with any other action taken to carry out the intent or purpose of any law or regulation, or other causes beyond Seller's control, Seller shall not be liable for any direct or indirect damage or loss due to any such causes. Seller uses reasonable efforts to ship within the time specified, but does not guarantee to do so and shall not be liable for any damage caused by delay in delivery, irrespective of the cause of delay.

Any clause required to be included in a contract of this type by any applicable law or administrative regulation having the effect of law shall be deemed to be incorporated herein. It is hereby certified that the goods manufactured by Seller are produced in accordance with the Fair Labor Standards Act.

No material may be returned to the Seller nor may orders be cancelled or specifications changed without first obtaining written permission of the Seller.

Additional Conditions Applicable to Export Sales

Seller will not provide any certification or other documentation nor agree to any contract provision or otherwise act in any manner which may cause Seller to be in violation of United States law, including but not limited to the Export Administration Act of 1979 and regulations issued pursuant thereto. This contract shall be construed in accordance with the United States law.

All orders shall be conditional upon granting of Export Licenses or Import Permits which may be required. Buyer shall obtain at its own risk any required Export License and Import Permits and Buyer shall remain liable to accept and pay for material if licenses are not granted or are revoke.

Unless otherwise specified on the face hereof, all international sales shall be ex-works, our plant, in accordance with Incoterms 1990 edition, as modified by these terms and conditions.

MANUFACTURING PLANTS AND SALES OFFICES

Manufacturing, Sales, Parts & Service

U.S. and International

P.O. Box 2069, Tulsa, OK 74101
6750 S. 57th W. Ave., Tulsa, OK 74131
TEL: (918) 447-4600
FAX: (918) 447-4677

Desalination of Sea Water
Water for Survival

HANS G. SCHOLL
SULZER ROTEQ

The inhabitants of geographical regions with a dry climate are not the only ones that suffer from a shortage of drinking water. Industries, farms, towns and villages located in remote areas are also affected in a similar manner. Thanks to a novel design out of a co-operation with Sulzer Hydro, Sulzer Pumps – a product division of Sulzer Roteq – has developed an energy- and space-saving unit comprising pump and energy-recovery turbine for reverse osmosis.

1■ There is an increasing demand for sea water desalination plants – in the Middle East, for example, the consumption of water is rising continuously, whereas the natural water resources are disappearing.

The industrial desalination of sea and brackish water, e.g. to obtain water for agricultural purposes (Fig. 1■), is by no means old. The first large-scale project was based on the evaporation principle and commissioned in Kuwait in 1956. However, this expensive process was hardly suitable for remote areas. Another method, the so-called reverse osmosis, which imitates the forces of nature, has been employed quite often for some years (see box).

EVERYTHING ON JUST ONE SHAFT

With reverse osmosis, sea water is subjected to high pressure and forced through a membrane, which results in the retention of the salt ions. However, the main problem with this process at the beginning was that the greater part of the generated pressure was lost when the brine was returned to the sea. To utilize this pressure again, it was decided to employ reverse-running pumps at first, which meant expensive technical modifications to the supply pumps. The Sulzer TUP team (Turbine and Pump), however, was able to simplify the concept for the utilization of the residual pressure appreciably several years ago. The first plant, with the name "Sabha", was inaugurated near Eilat (Israel) in 1995. Here, a four-stage high-pressure pump for the supply of sea water and a turbine for the recovery of energy operate on a common shaft (Fig. 2■). A Pelton turbine, which recovers the high pressure energy of the remaining brine, was employed for the first time. Since 40 to 45% of the pump energy is saved, respectively recovered in a direct manner, reverse osmosis is an attractive solution for the operators of desalination plants. The new technology has now matured and is about to be manufactured on an industrial scale.

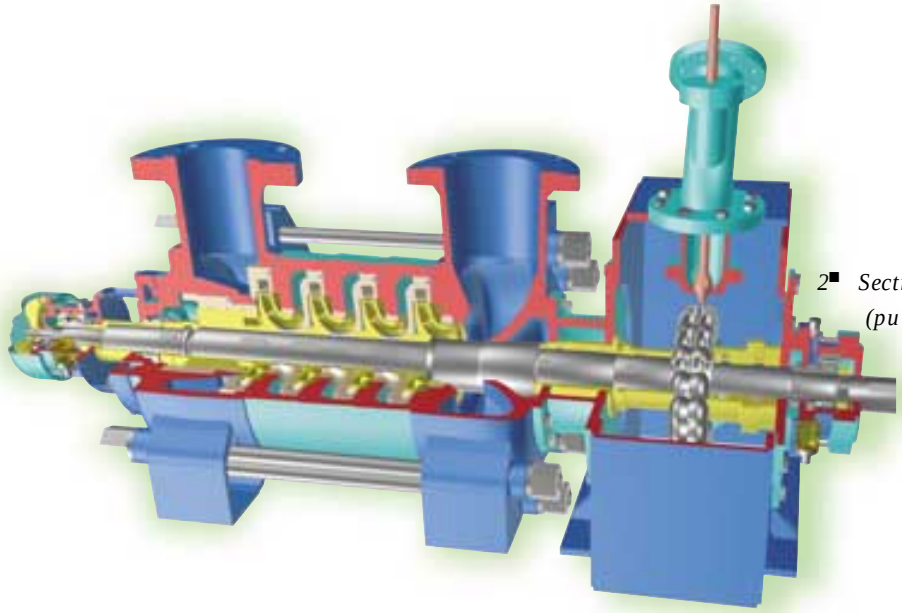

2■ Sectional view of the novel TUP compact unit (pump and Pelton turbine) on a common shaft. With the aid of the Pelton turbine, 45% of the energy required by the pump is recovered from the salty sea water.

SAVING OF ENERGY AND SPACE

The unconventional approach in the form of a complete train not only requires less energy, but also appreciably less space than conventional solutions (Fig. 3■). Other advantages for the operator are the markedly shorter pipework (Pelton turbines do not require any counter pressure), lower operating costs, easier installation and the simplified maintenance. In contrast to the hitherto conventional reverse-running pumps, there is no need to fear dry-running with Pelton turbines, i.e., a bypass system is not necessary when the unit is started up.

KNOW-HOW FROM A SINGLE SOURCE

Thanks to the close co-operation between Sulzer Pumps and Sulzer Hydro, it was possible to adapt the pump and Pelton turbine to a common shaft in an optimum manner. This could not have been accomplished with the same flexibility with third-hand products. In addition, the two firms have a wealth of experience in the difficult machining of sea-water-resistant Duplex steels, which are used by TUP. With regular maintenance, these plants are serviceable over many years, a fact that is already substantiated by a number of reference installations. Sulzer has elaborated special maintenance plans for this purpose. Moreover, the Sulzer diagnostic system SUDIS (see STR 1/99, p. 4), which is employed successfully in power stations, can also be adapted to the requirements of desalination plants. In this way, the operator is provided with a valuable aid for the planning and incorporation of the necessary and regular maintenance work. If required, the SUDIS system can also transmit the recorded data for monitoring and service planning per modem to

3■ With a length of 4.25 m, the Sulzer desalination train (pump, turbine, motor) occupies only 60% of the normal space requirement.

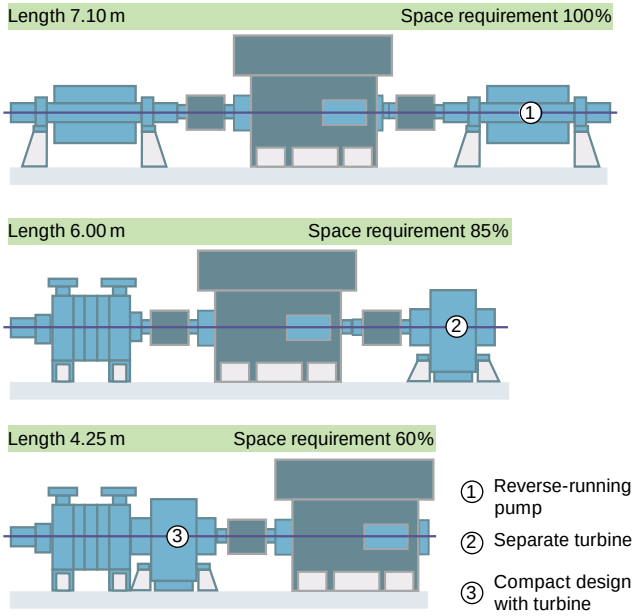

4n The Sabha plant in Eilat (Israel) has been operating trouble-free for three years. Remote monitoring of the plant by means of modem enables the service specialists at the Monitoring Centre in Bruchsal to assist the personnel directly on the site.

the Monitoring Center in Bruchsal (DE), where it will be analyzed by experts; this is the case, for example, with the plant in Sabha (Fig. 4■).

An ever-increasing number of operators are also taking the opportunity to leave the servicing of the installed machinery completely to Sulzer Pumps on the basis of long-term agreements. In this way, they receive a guaranteed minimum quantity of industrial water and pay per cubic meter – and do not have to worry about spare parts or service any more. The range of TUP installations now available comprises five models with pressure connections of ND 80/100/150/200/250 and drinking water production quantities of 1200 to 27 000 m^3/day (per train). This means they cater for the needs of small towns, businesses and industry, as well as for plantations, ships and hotels. Ω

FOR MORE DETAILS

Sulzer Pumpen (Deutschland) GmbH
Hans G. Scholl
Ernst-Blickle-Strasse 29
DE-76646 Bruchsal
Germany
Telephone +49 (0)7251-76 395
Fax +49 (0)7251-76 333
E-mail hans.scholl@sulzer.ch

DESALINATION BY MEANS OF TWO PROCESSES

Two processes are employed for the removal of the dissolved ionic compounds in sea and brackish water. With thermal flash evaporation (mostly with solar collectors), the sea water to be desalinated is heated to a temperature of 90 to 130 °C, at which it evaporates and is collected as condensate in gutters. The brine is returned to the sea. The energy requirement is independent of the salt content.

The membrane processes include electrodialysis, ultrafitration, pervaporation, reverse osmosis and also hyperfiltration. Osmosis is the flow of solvent molecules through a membrane from a diluted into a concentrated solution. The membrane is semi-permeable, i.e., it only permits the passage of the solvent (mostly water), and not its content of dissolved voluminous molecules. The part with a high concentration is diluted until an equilibrium is established, admittedly under higher pressure. The osmosis plays an important role in the metabolic processes of plants and human beings. With reverse osmosis, the water is forced through the membrane under pressure and out of the part with the higher concentration. The operating pressure of the pump varies between 65 and 75 bar and, in principle, must exceed the osmotic pressure of the salt water. The energy requirement depends on the salt content.

The principle of reverse osmosis: the sea water is forced through a membrane by means of high-pressure pumps, as a result of which the desalinated water and the concentrated brine solution are separated. Since the pressure level of the concentrate is still high, it is routed to a Pelton turbine to recover the energy and then returned to the sea.

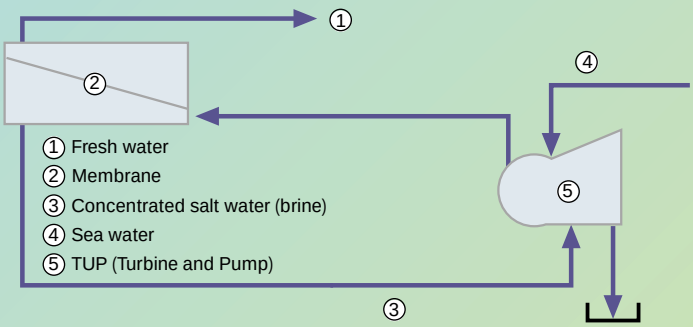

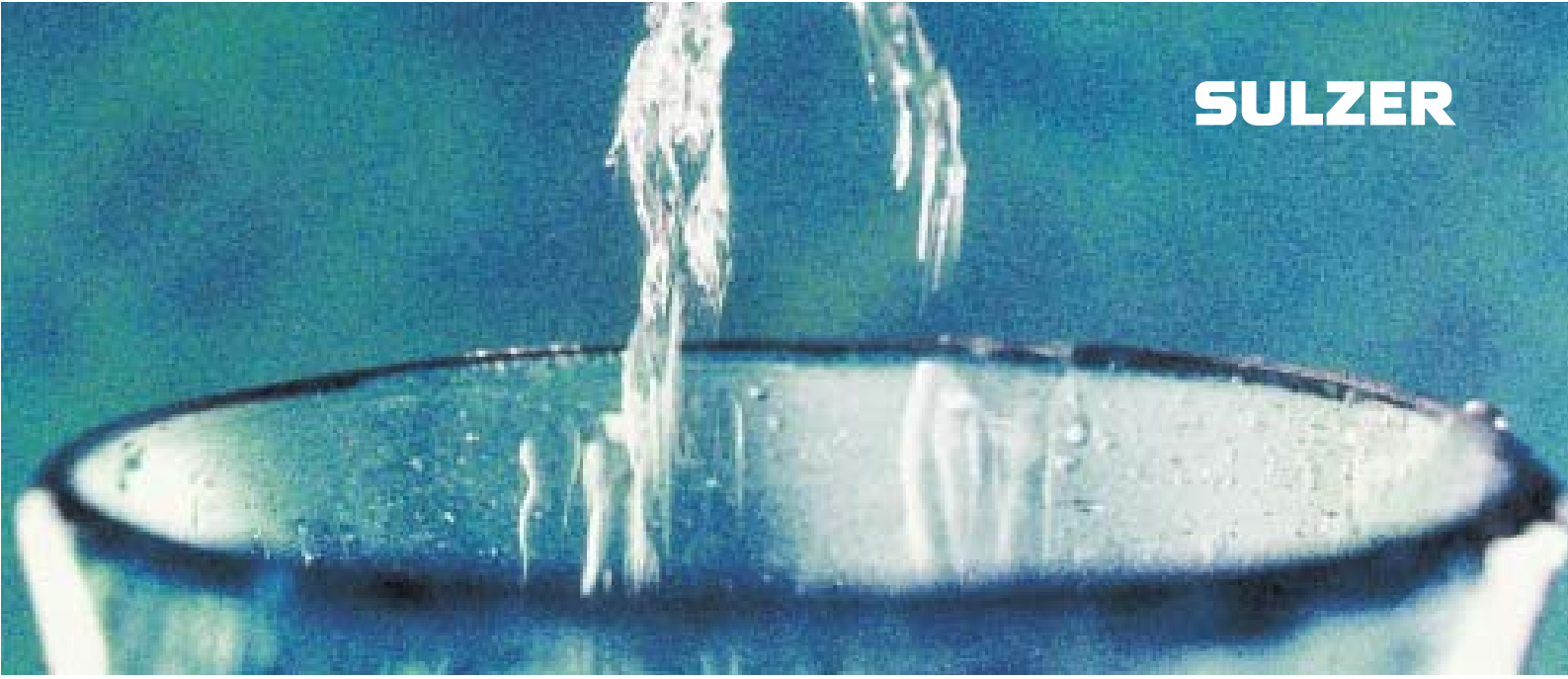

Pumps For Desalination Plants

The Heart of Your Process

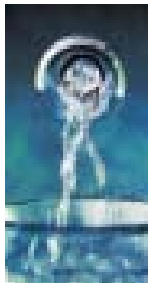

Application Matrix

Product Types		Water Intake	LP Booster	HP Booster	HP Feed	Filter Backwash	Chemical Cleaning	Product Transfer
End Suction Pumps	APP/APT	●	●			●	●	●
	ASP/AST	●						
	CPT	●	●			●	●	●
	ZE/F			●				
Axial Spilt Pumps	SMN	●	●					●
	ZPP	●	●					●
Multi Stage Pumps	HPP/HPT				●			
	MB				●			
	MC				●			
	MSD				●			
	TUP				●			
Vertical Pumps	BS	●						

Sulzer Pumps

Sulzer Pumps combines more than 135 years of experience in pump development and manufacturing with a deep commitment to fully understanding the needs of our customers.

Our detailed process and application knowledge has allowed us to develop innovative pumping solutions for the desalination market including tailor made systems if required. Our active research & development supports this customer oriented approach.

Sulzer Pumps has sales and service facilities in all the major markets of the world to provide fast and flexible response and support.

Global Manufacturing

With 14 manufacturing facilities across the globe (including two foundries) Sulzer Pumps combines the advantages of being a global company with the ability to be your local partner. Control of the entire manufacturing process allows us to maintain the highest quality standards.

Our centrally administered quality program ensures that, regardless of where the individual component is produced, Sulzer Pumps quality is consistently excellent. The ability to transfer manufacturing of either parts or complete pumps between plants guarantees the most efficient utilization of our facilities.

The result of this approach is that the users of our products benefit from class leading levels of performance and reliability no matter what the application. Industries ranging from offshore oil production to paper manufacturing depend on the reliable operation of Sulzer Pumps products to keep their facilities running smoothly.

Reverse Osmosis (Two Stage)

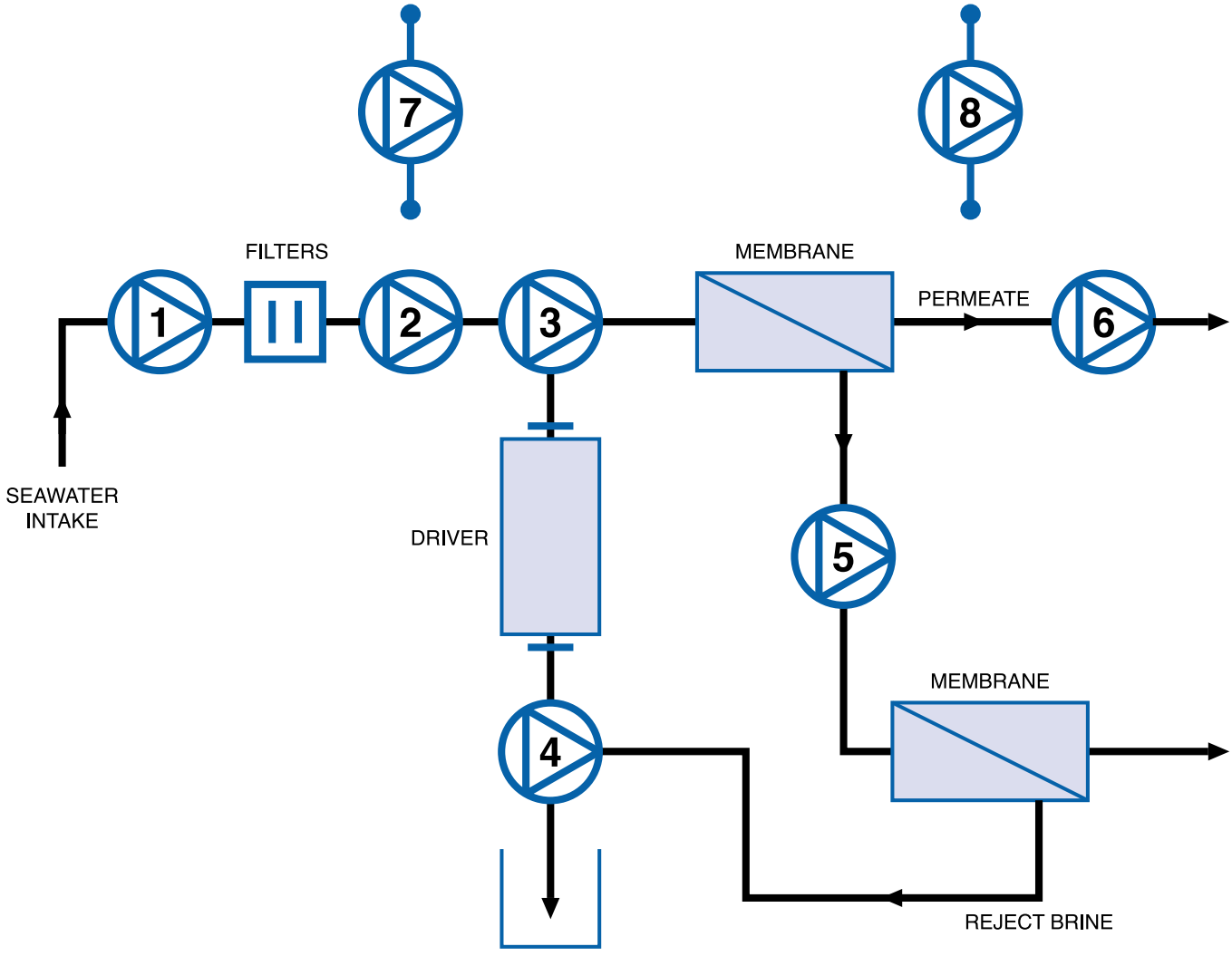

1
Seawater Intake
Typically a vertical mixed flow or horizontal pump supplying either sea or other raw water through a filtration system to the plant.

2
Low Pressure Booster
Boosts the filtered water to the main high pressure feed pumps.

3
High Pressure Feed
Feeds water through the primary filtration membranes.

4
Energy Recovery Turbine
Recovers energy from the reject brine through a reverse running pump or Pelton turbine.

5
High Pressure Booster
Adds pressure lost to in the first membrane to allow a secondary membrane to be utilised.

6
Product
Transfers treated water to storage for distribution.

7
Filter Backwash
Provides water for backwash cleaning of the intake filters.

8
Chemical Cleaning
Circulates chemical cleaning solution for system cleaning.

Multistage Flash plants

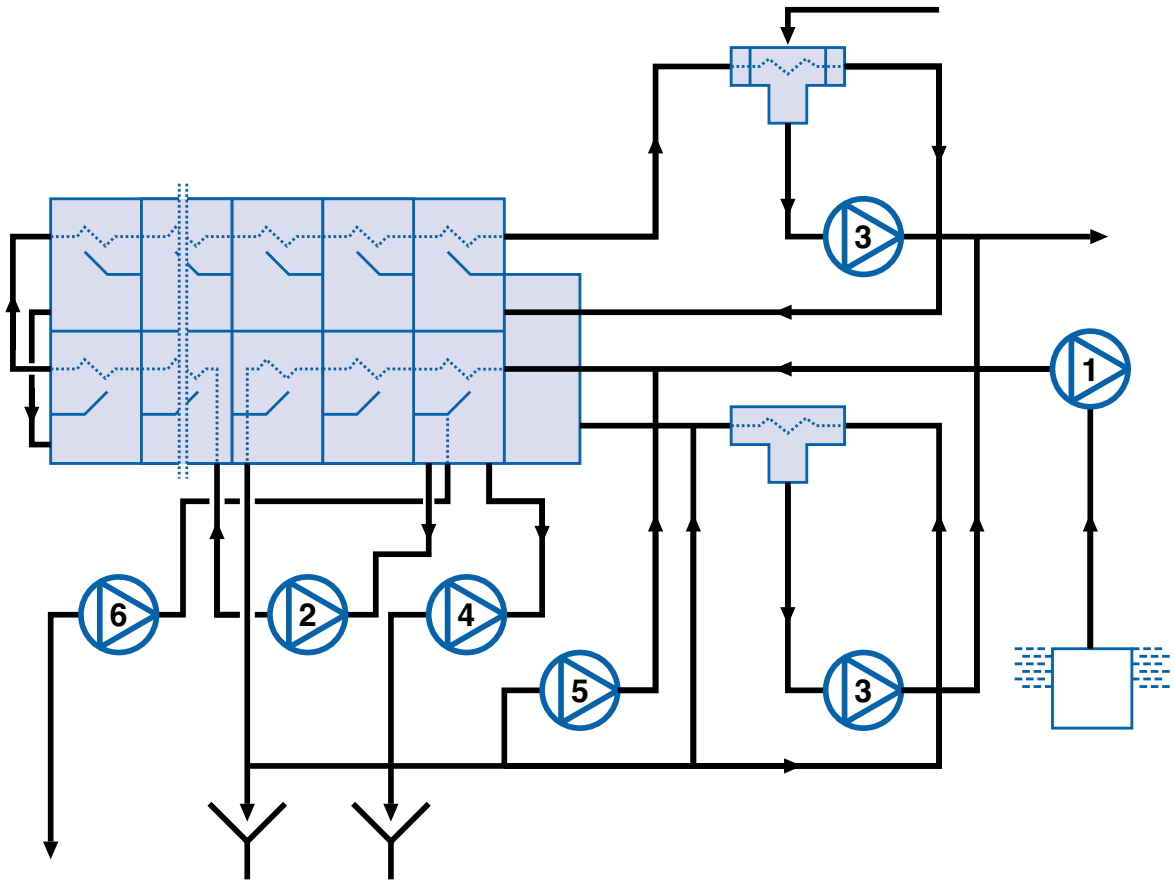

1
Seawater supply pump
Vertical mixed flow pump either in the jetty or the seawater intake structure, supplying water directly to the heat rejection and cooling currents as well as the make-up water supply.

2
Brine recirculating pump
Vertical canned pump recirculating the brine in the evaporator heat recovery section, condenser and brine heater.

3
Brine heater condensate pumps
Extracting the distillate from the evaporator to discharge into the power plant storage tank.

4
Brine blowdown pump
Vertical canned pump extracting concentrated brine from the last evaporator stage for discharge into the drain culvert.

5
Seawater recirculating pump
Horizontal centrifugal pump for use in winter to keep the seawater supply at a constant temperature.

6
Produced water pump
Vertical canned pump extracting the distillate for discharge into the produced water tanks.

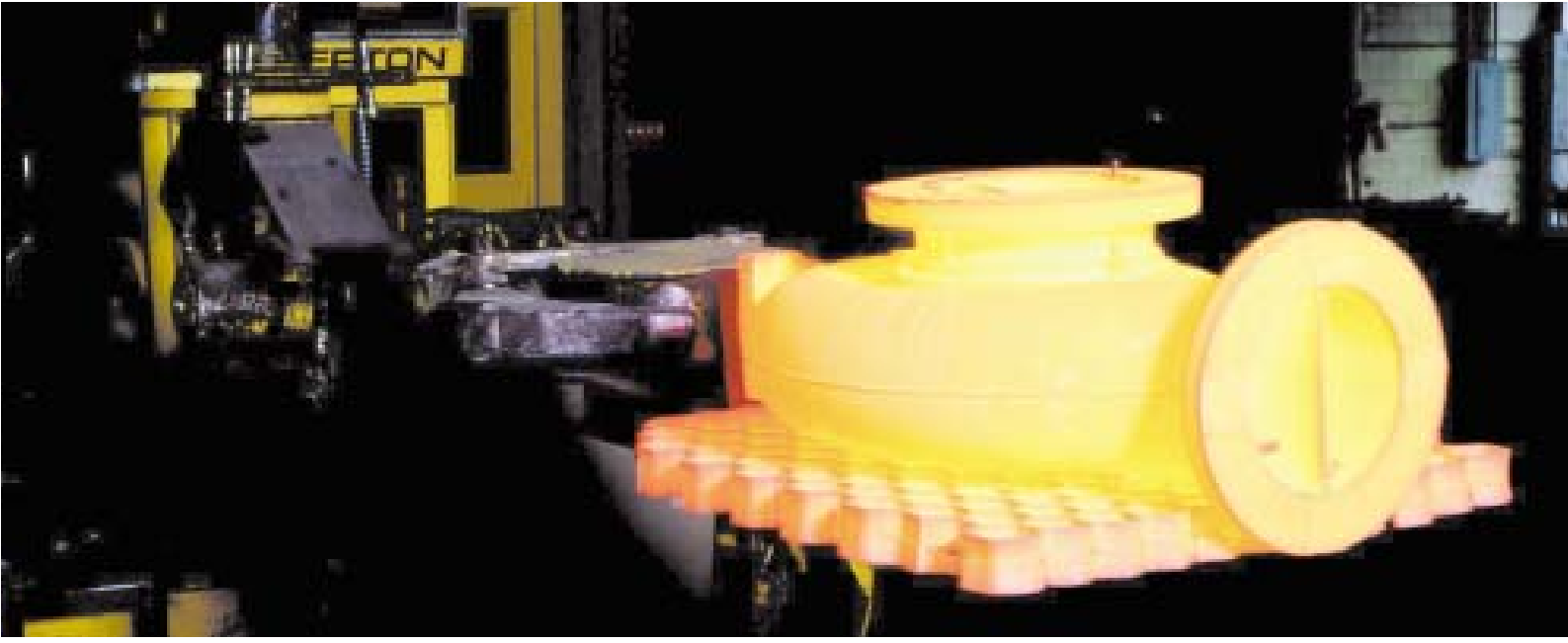

Materials

Sulzer Pumps are used in many services that require both corrosion and abrasion resistance. This is why we have chosen duplex stainless as our standard. Our standards are A890-3A with 1B and 5A (Super Duplex) 3A and 1.4468.

We also offer the super austentic stainless 654 SMO* for severe corrosion applications. We can customise the materials to suit most all reverse osmosis applications.

The Pitting Resistance Equivalent (PRE) is an index that is used to help determine an alloy materials susceptibility to pitting corrosion, which is a common problem in alloy steels. The higher the index number the greater the metal's resistance to pitting corrosion.

INTERNAL CODE	COMMON NAME	CHEMICAL ANALYSIS									
		Cr	Ni	Mo	Cu	Si	Mn	C	N	PRE	ASTM
41	**CD4MN**	24.0-27.0	4.0-6.0	1.75-2.5		0.04	1	0.06	.15-.25	35.60	A890-3A
4K	**2205**	24.0-23.5	4.5-6.5	2.5-3.5	1 Max	0.02	1.5	0.03	.1-.3	36.10	A890-4A
4T	**5A**	24.0-26.0	6.0-8.0	4.0-5.0		1.0	1.5	0.03	.1-.3	43.00	A890-5A
E7	**CD4MCuN**	24.5-26.5	4.5-6.0	1.75-2.25	2.75-3.25	1.0	1.0	0.4	0.15	35.30	A890-1B
33	**329SS**	24.0-27.0	4.5-7.0	2.5-3.0		1.0				35.30	AISI329
E5	**316SS**	18.0-21.0	9.0-12.0	2.0-3.0		2.0		0.08		27.50	A744 CF-8M
E6	**317SS**	18.0-21.0	9.0-13.0	3.0-4.0		1.5		0.08		30.90	A744 CG-8M
E4	**Alloy 20**	19.0-21.0	27.5-30.5	2.0-3.0	3.0-4.0	1.0	1.7	0.07		30.00	A744 CN-7M
4U	**654 SMO***	24.0-25.0	21.0-23.0	7.0-8.0	.30-.60	0.5	2.0-4.0	0.02	.45-.55	56.1	A240.480.358
–	**1.4468**	24.5-26.5	5.5-7.0	2.5-3.5		1.0	2.0	0.03	0.12-0.25	38.4	

* 654SMO is registered by Avesta Sheffield

Energy Recovery Arrangements

TUP

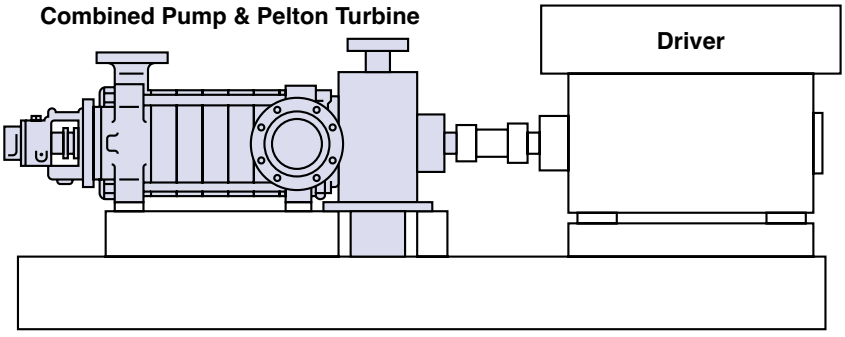

HPP/T

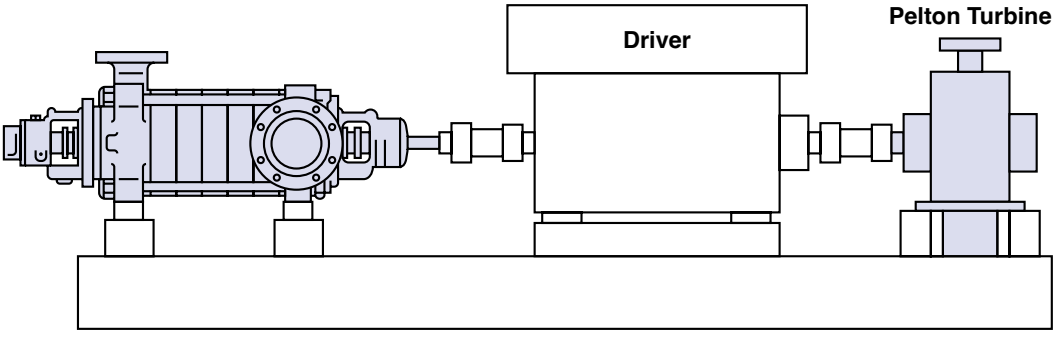

MB

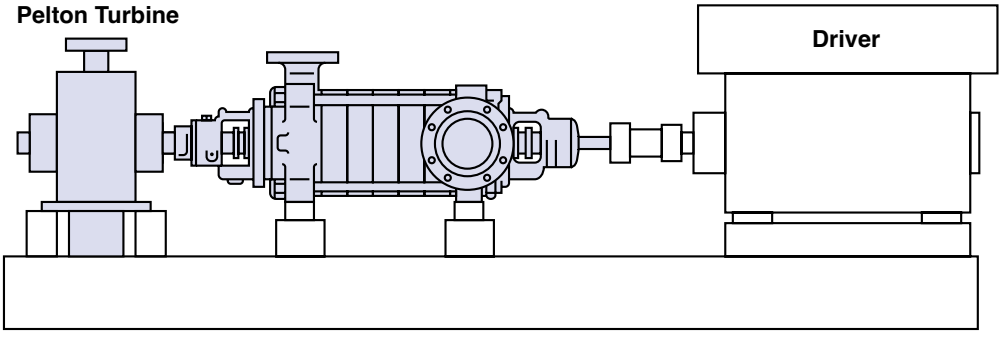

MSD

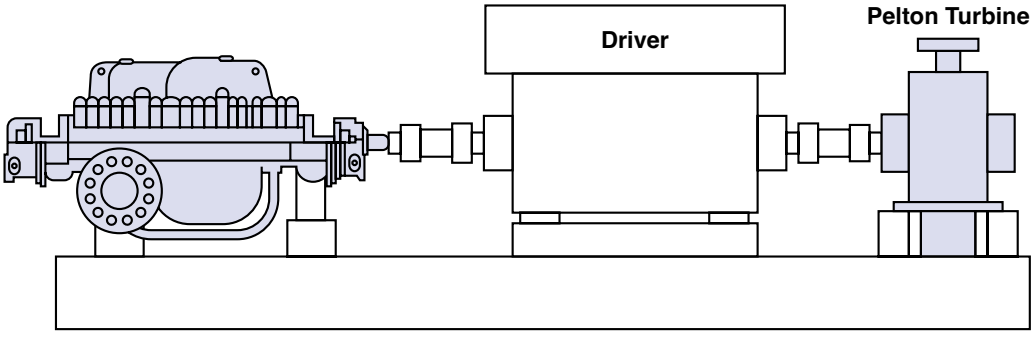

References

TUP 150-360/6 stage High pressure membrane feed pump complete with integral pelton wheel turbine supplied to Abu Dhabi. The turbine recovers nearly 50% of the 900 kW absorbed by the pump.

TUP 100-300/5 stage high pressure membrane feed pump complete with integral pelton wheel power recovery turbine and electric motor. The pumpsets are installed in Argentina.

MSD High pressure axially split membrane feed pump with separate power recovery pelton wheel turbine driven by a double shaft motor. The pumpsets are installed in Spain.

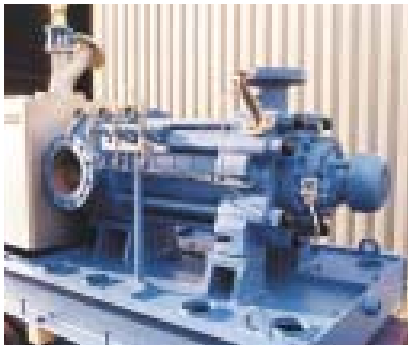

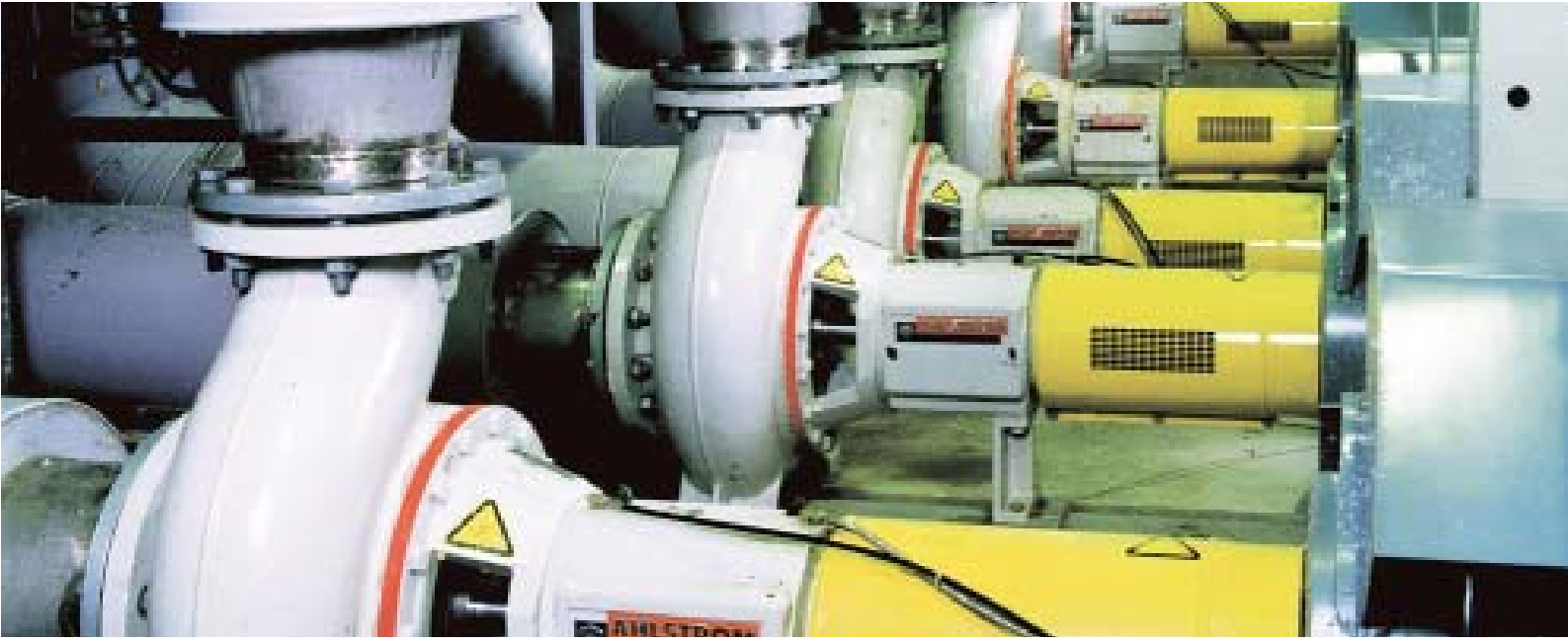

Single Stage Pumps

CPT
The CPT chemical process pump is designed for continous operation in process industries for pumping clean, abrasive or corrosive liquids. This pump is designed to exceed ANSI (ASME 873.1 M) pump standards.

Z Series
The z series of end suction process pumps are available in both industrial and API 610 OH2 versions. Manufactured in four casing pressure ranges, the common hydraulic and bearing assemblies provide spares interchangeability in refineries and other process plants.

A Series
AHLSTAR™ A pumps are designed for pumping clean, abrasive or corrosive liquids as well as stocks of various kinds. If the liquid contains gas or air the pump can be modified with either internal or external gas removal construction with stabilizes the operation. The Sulzer Dynamic Seal is specially designed for difficult liquids offering reliable operation and low total sealing costs.

Performance Range

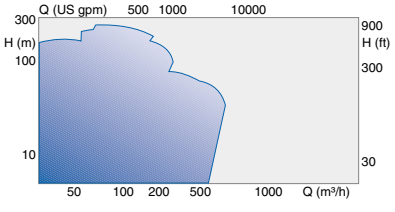

Pressure 25 bar / 360 psi
Temperature 260 °C / 500 °F

Performance Range

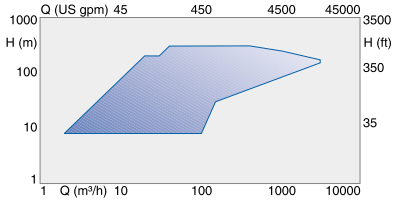

Pressure 150 bar / 2175 psi
Temperature 450 °C / 840 °F

Performance Range

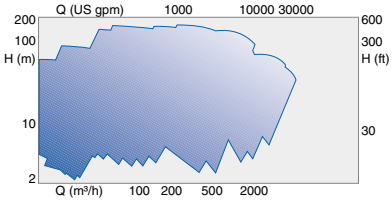

Pressure 16 bar / 230 psi
Temperature 180 °C / 355 °F

Ring Section Pumps

TUP

This unique design combines the hydraulic components from the M range together with a pelton wheel for energy recovery in a single unit. Specifically designed for desalination applications these pumps provide a compact and commercially attractive option to traditional solutions.

HPP/HPT

These high pressure multistage pumps are used for pumping clean or slightly contaminated liquids in high pressure applications in various industries. Reliable and innovative design (eg. impeller polygon mounting and Dynamic Seal) and easy maintenance make the HPP/HPT pump superior to other high pressure pumps.

M Series

This modular series of ring section multistage pumps consist of MB, MC, MD and ME ranges. A wide range of common hydraulic components and bearing assemblies are used within the 4 standard pressure ranges. This flexibility minimizes the overall number of parts required.

Performance Range

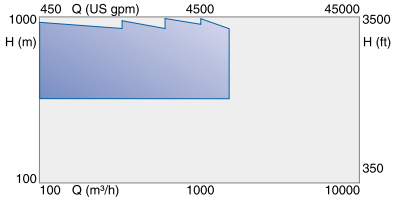

Pressure 100 bar / 1500 psi
Temperature 90 °C / 190 °F

Performance Range

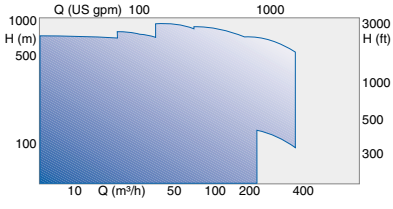

Pressure 100 bar / 1450 psi
Temperature 200 °C / 392 °F

Performance Range

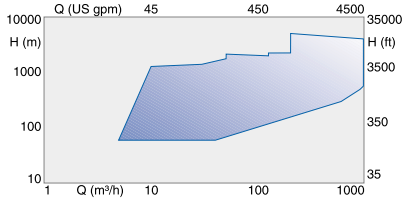

Pressure 450 bar / 6500 psi
Temperature 210 °C / 410°F

Axially Split Pumps

MSD
MSD API 610 883 multistage pumps are widely used in refineries, petrochemical plants, pipelines, water injection and power generation applications. The broad range of standard hydraulics and mechanical design options ensure optimum fit to customers duty requirements, using proven pre-engineered solutions.

SM/SMN Series
SM single stage double entry pumps are used across a broad range of industries in liquid transfer applications. Standard designs include API 610 881, industrial and vertical options.

ZPP
ZPP double suction pumps are especially designed for today's high speed paper machines requiring low pulsation and high efficiencies. Other applications include cooling and circulating water pumping.

Performance Range

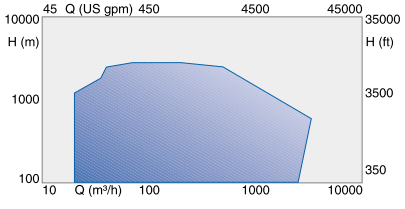

Pressure 310 bar / 4500 psi
Temperature 200 °C / 400 °F

Performance Range

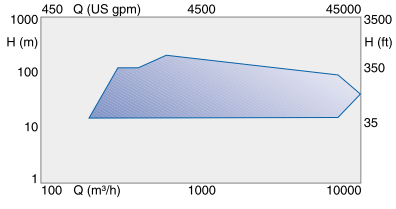

Pressure 30 bar / 435 psi
Temperature 160 °C / 320 °F

Performance Range

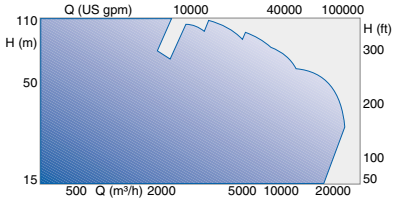

Pressure 10 bar / 150psi*
Temperature 120 °C / 250 °F

Vertical Pumps

B Series

The BK, BS and BP range of vertical line shaft pumps are primarily used in water lift, transfer and cooling water applications. A double suction variant, the BD, is available where NPSH is limited. When fitted with a can the BDC may also be used for condensate extraction applications. API 610 V SI, VS2, VS3 and VS6 versions are available.

Performance Range

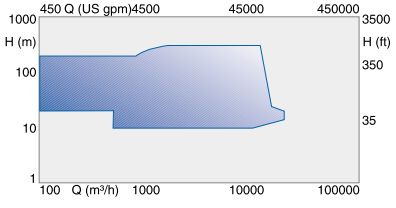

Pressure	40 bar / 580 psi
Temperature	100 °C / 210 °F

Customer Support Services

Sulzer Pumps is committed to providing local specialist support through our worldwide network of service facilities. Applying our unique combination of experience and expertise, we are consistently able to deliver high quality, value added rotating equipment support, 24 hours a day, meeting the expectations of our customers. Overhaul and repair of all types of equipment is undertaken including equipment manufactured by third parties. Needless to say we supply parts and service for all our equipment including the PumpsOnline e-commerce spares ordering and inventory management facility.

Furthermore we can also design, deliver and fit high integrity components for non-Sulzer machinery using our in house re-engineering specialists.

Through the application of maintenance agreement contracts, we are able to operate and maintain strategic rotating equipment of all sizes, makes and types, providing end-users with cost effective service provision. Such agreements are wide ranging in overall scope and involve performance based reimbursement structures, guaranteed equipment availability as well as management and provision of spare parts.

Equipment retrofit specialists undertake the updating of existing pumping installations. Using root-cause analysis, system investigation and materials assessment, we are able to modify existing installations to meet new duty conditions. In addition to increasing performance, retrofitting existing installations provides opportunities for increasing component life and reducing energy consumption.

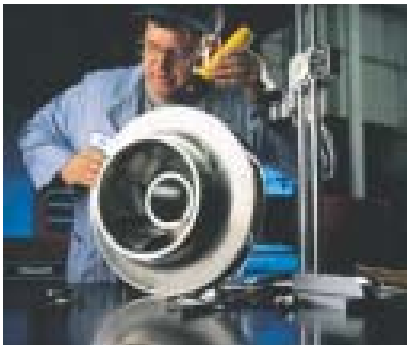

Your Global Partner

Sales

Customer Support Service Centre

Manufacturing Facilities

Headquarters

And representatives in over 140 countries

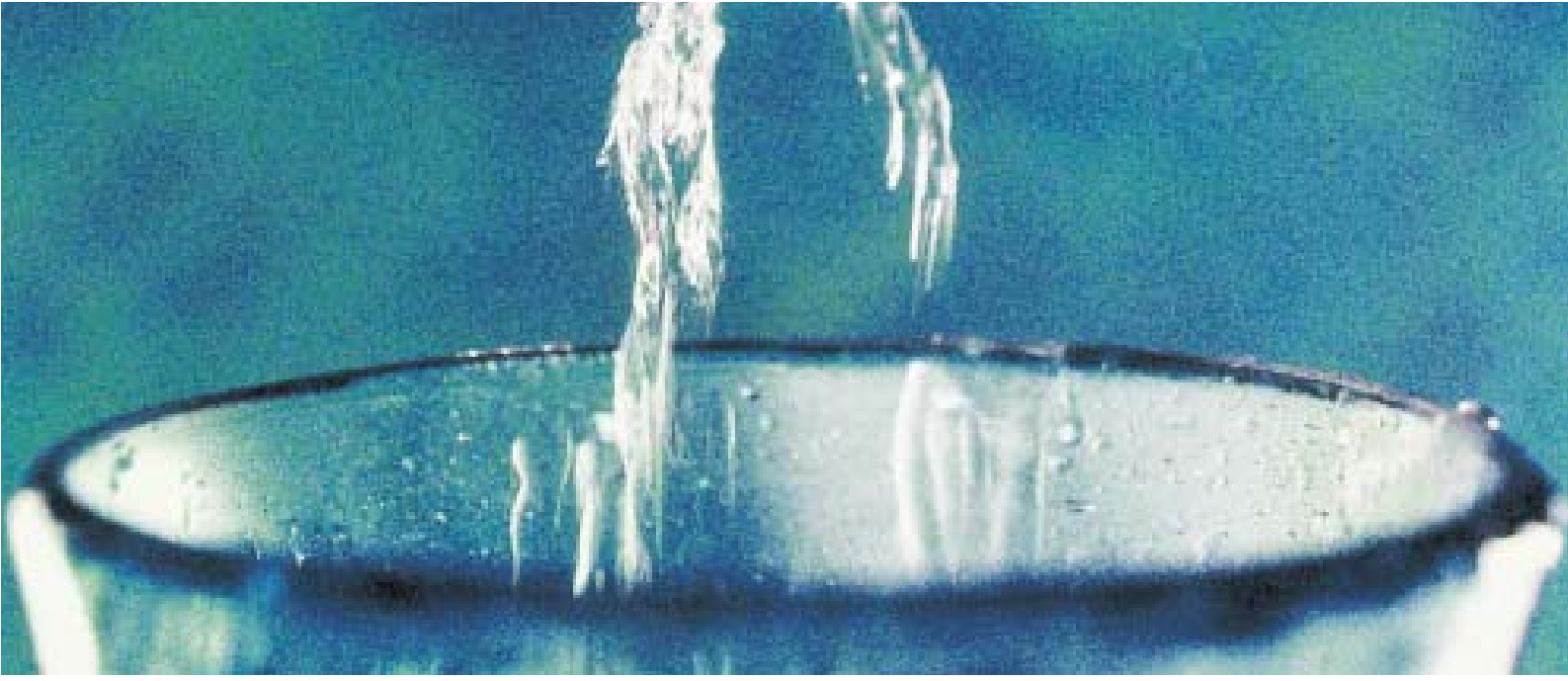

Sulzer Pumps
Sulzer Pumps Ltd.
Zürcherstasse 12
P.O.Box 414
CH-8401 Winterthur
Switzerland
Tel. +41 (0)52 262 11 55
Fax +41 (0)52 262 00 40
E-mail info.pumps@sulzer.com
Internet www.sulzerpumps.com

4. OSMOSE REVERSA – RECUPERAÇÃO DE ENERGIA

HP-8500 through **HP-2400**

PX BOOSTER PUMPS

30-300 GPM / 6.8-68 m³/hr

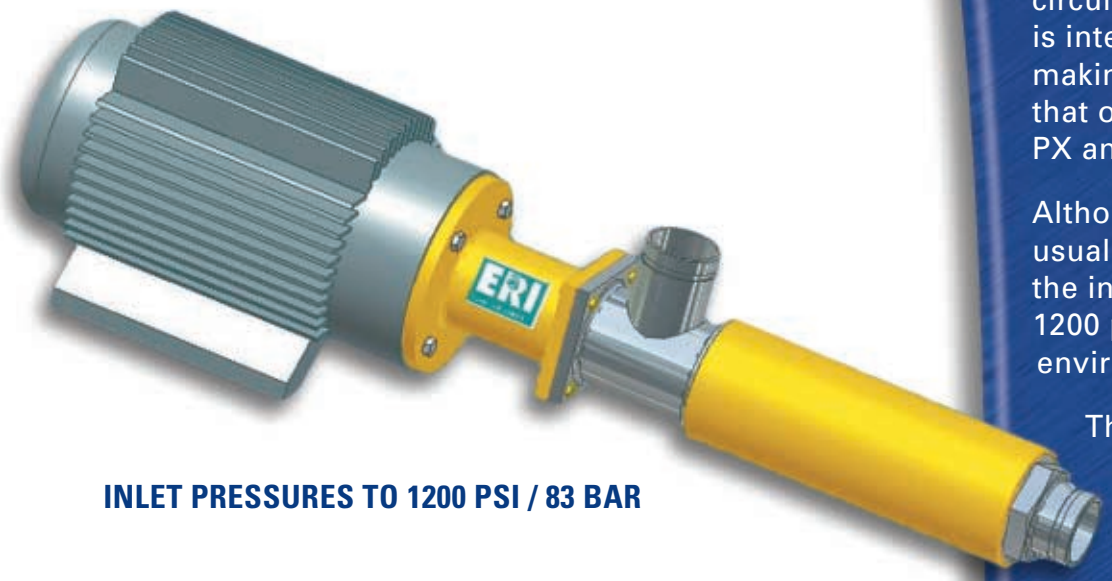

INLET PRESSURES TO 1200 PSI / 83 BAR

Standard Features

- Non-corrosive materials for seawater brine application (all metal parts are AL6XN®).
- Non-corrosive Noryl impellers for high efficiency and smooth flow.
- 3" Victaulic® connections for easy installation.
- 50/60 Hz TEFC motor ready for VFD control.
- Simple interface for easy mechanical seal maintenance.
- External motor–no high pressure electrical seals to fail.

Optional Accessories

- High Pressure Flow Meter.
- 316SS Flexible Couplings.
- Spare Parts Kit.

PX BOOSTER PUMPS

The **PX BOOSTER Pump** is a high performance pump designed to provide a small pressure boost within a high-pressure, corrosive seawater environment.

Seawater reverse osmosis (SWRO) units using PX Pressure Exchanger technology employ a high-pressure circulation loop.The **ERI PX BOOSTER** is intended for use in this loop, making up the small pressure losses that occur across the membranes, the PX and associated piping.

Although the pressure boost is usually small at 30 – 45 psi (2-3 bar), the inlet pressures are high at up to 1200 psi (83 bar) and the corrosive environment can be extreme.

This service requires a pump designed and built specifically for this application – made of the correct materials, built for this unforgiving environment, yet simple to operate and maintain.

With ALL wetted metal parts made of AL6XN® alloy, the **ERI BOOSTER** pump is intended for permanent duty in the most difficult and corrosive seawater conditions.

ERI
ENERGY RECOVERY INC.

Contact **ERI** for more information

(+1) 510-483-7370

fax: 510-483-7371

sales@energy-recovery.com

www.energy-recovery.com

HP-8500 through HP-2400

Specifications

Model	Typical Flow Range Gpm (m3/hr)	HP	Full Load Amps 460 vac	Dimensions inches H x W x L	Shipping Weight
HP-8503	50-70 (11.4-15.9)	5	6	10 x 12 x 39	130 lbs.
HP-8504	70-100 (15.9-22.7)	7.5	9	11 x 12 x 43	160 lbs.
HP-1253	100-160 (22.7-36.4)	10	12	11 x 13 x 46	175 lbs.
HP-1254	160-200 (36.4-45.4)	15	17	11 x 13 x 49	220 lbs.
HP-2402	130-230 (29.5-52.3)	15	17	11 x 13 x 49	220 lbs.
HP-2403	230-300 (52.3-68.2)	20	23	12 x 16 x 50	330 lbs.

* Inlet and Outlet connections are 3" Victaulic.
**Pumps include motor designed for VFD control.

HP-8500 Pump Curves @ 3500 RPM (60Hz)

*DO NOT OPERATE PUMP OUTSIDE OF INDICATED FLOW RANGE.

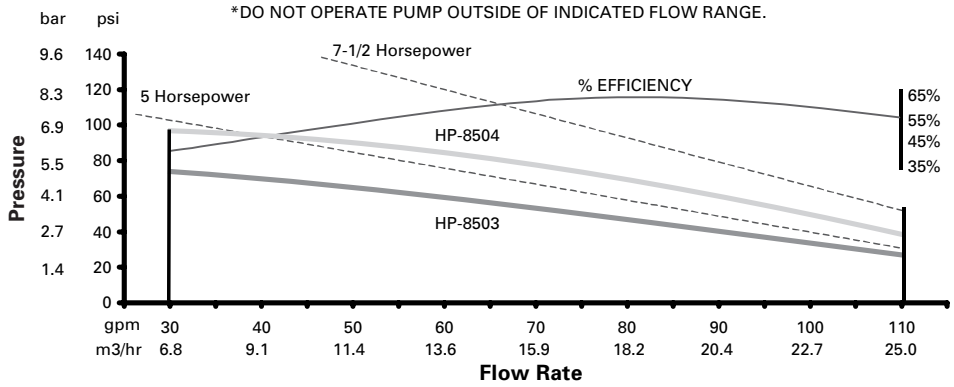

HP-1250 Pump Curve @ 3500 RPM (60Hz)

*DO NOT OPERATE PUMP OUTSIDE OF INDICATED FLOW RANGE.

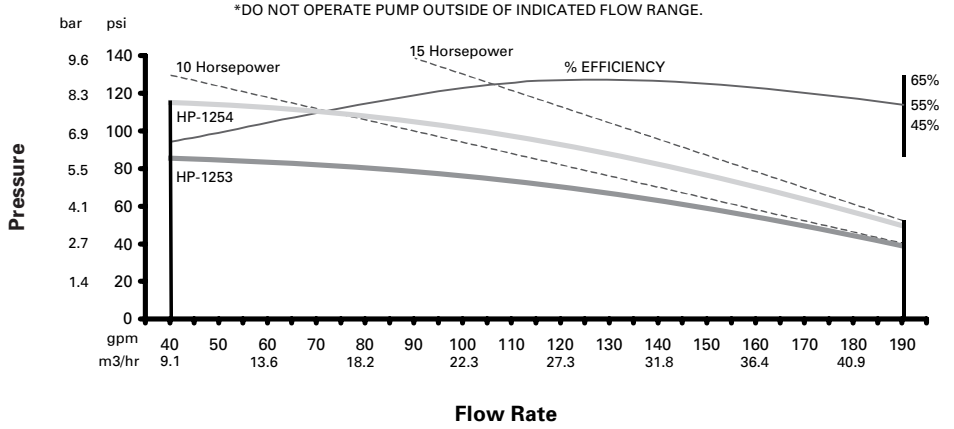

HP-2400 Pump Curves @ 3500 RPM (60Hz)

*DO NOT OPERATE PUMP OUTSIDE OF INDICATED FLOW RANGE.

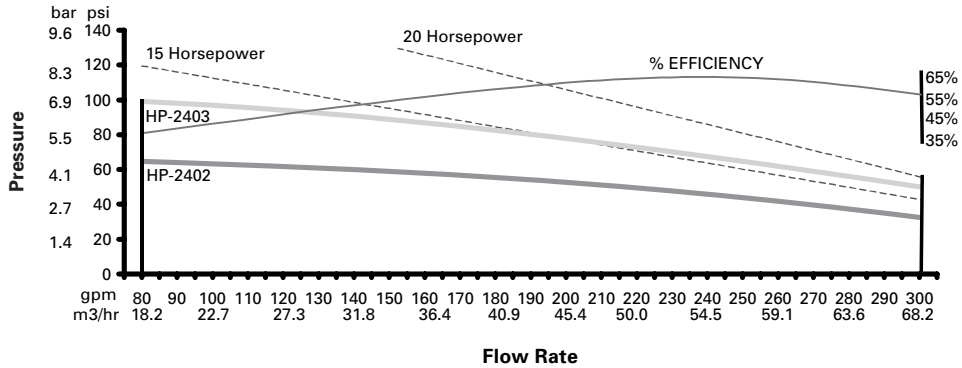

ERI
ENERGY RECOVERY INC.

PX BOOSTER PUMPS

ERI BOOSTER Pump Designed for the Job

(+1) 510-483-7370
fax: **510-483-7341**
sales@energy-recovery.com
www.energy-recovery.com

ENERGY RECOVERY, INC.

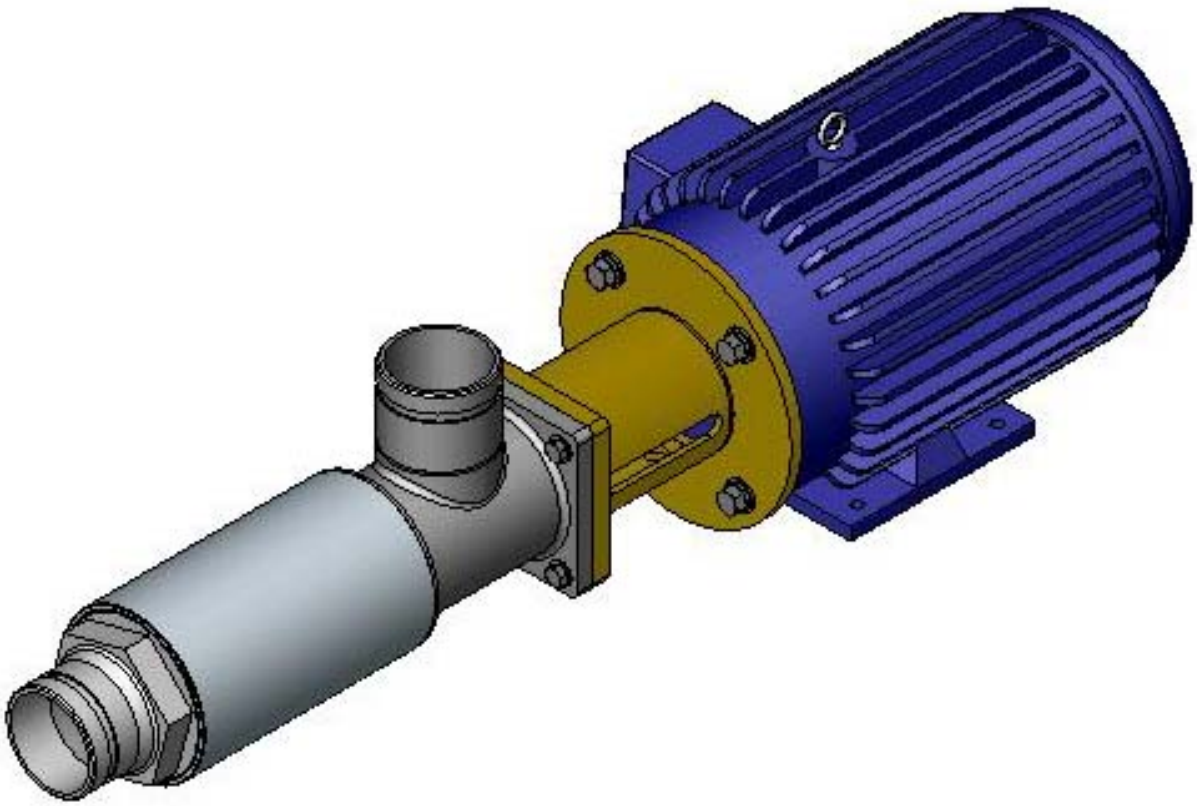

INSTALLATION, OPERATION, & MAINTENANCE MANUAL

Series 8500-2400 PX Booster Pumps

Energy Recovery, Inc.
1908 Doolittle Drive, San Leandro, CA 94577 USA
Tel: +1 510 483 7370 / Fax: +1 510 483 7371
www.energy-recovery.com / sales@energy-recovery.com

Installation, Operation, & Maintenance Manual
Series 8500-2400 PX Booster Pumps

TABLE OF CONTENTS

1.0 INTRODUCTION

This manual contains instructions for the installation, operation, and maintenance of the Energy Recovery, Inc.™ (ERI™) PX Booster Pumps for energy recovery in Sea Water Reverse Osmosis (SWRO) systems in conjunction with ERI's Pressure Exchanger™ (PX™) technology. The PX Booster Pump boosts the pressure in the high pressure portion of an SWRO system to make up the small pressure losses that occur through the SWRO membranes, the PX units and the associated piping. The PX Booster Pump is designed to withstand a high inlet pressure in a corrosive seawater environment.

Please read this manual thoroughly before installation or operation and keep it for future reference. The instructions in this manual are intended for personnel with general training and experience in the operation and maintenance of fluid handling systems. PX and PX Booster Pump maintenance personnel are strongly encouraged to attend Factory Training courses offered by Energy Recovery, Inc. Energy Recovery, Inc. technical service personnel are available for assistance by telephone during the regular business hours of 08:00 to 17:00 Pacific Standard Time. Field service and system commissioning assistance are available.

Further information about PX Booster Pumps or other Energy Recovery, Inc. products or service can be found by contacting Energy Recovery, Inc. at:

Energy Recovery, Inc.
1908 Doolittle Drive, San Leandro, CA 94577 USA
Tel: +1 510 483 7370 / Fax: +1 510 483 7371
www.energy-recovery.com / sales@energy-recovery.com

2.0 MATERIALS OF CONSTRUCTION AND QUALITY

ERI's commitment to quality starts with the fabrication and procurement of top quality materials made to extremely tight clearances. Every part is checked to ensure it meets all dimensional specifications during and after each stage of the manufacturing process. All wetted metal components in PX Booster Pumps are AL6XN® or equivalent stainless steel. Impellers and diffusers are fiber reinforced polymer. The mechanical seal has carbide contact/sealing faces. Seals are ethylene propylene (EPDM).

Assembled PX Booster Pump units are subjected to extensive testing in our wet test facility. Each PX Booster Pump is tested for efficiency, operating pressures, and flow rates. Each unit is tracked with a serial number and the testing records are maintained.

3.0 SAFETY, ARRIVAL AND INSPECTION

The PX Booster Pump has been designed to provide safe and reliable service. However, it is both a pressure vessel and a piece of industrial rotating machinery. Therefore, operations and

---

™ Energy Recovery, Inc., ERI, PX, Pressure Exchanger, and PX Pressure Exchanger are trademarks of Energy Recovery, Inc.

® Trademark of Allegheny Ludlum Corp.

maintenance personnel must exercise good judgment and proper safety practices to avoid damage to the equipment, to avoid damage to surrounding areas, and to prevent injury. It must be understood that the information contained in this manual does not relieve operation and maintenance personnel of the responsibility of exercising normal good judgment in the operation and care of this product and its components. The safety officer at the location where this equipment is installed must establish a safety program based on a thorough analysis of local industrial hazards. Proper installation and care of shutdown devices and over-pressure and over-flow protection equipment must be an essential part of any such program. In general, all personnel must be guided by all the basic rules of safety associated with high-pressure equipment and processes. Operation under conditions outside of those stated in Table 6-1 can result in damage to the PX Booster Pump.

NOTE

Energy Recovery Inc. will not be liable for any project delay, damage or injury caused by the failure to comply with the procedures in this manual. This product must never be operated at flow rates, pressures or temperatures outside of those stated in Table 6-1, or used with liquids not approved by Energy Recovery, Inc.

The flags shown and defined below are used throughout this manual. They should be given special attention when they appear in the text.

DANGER

These flags denote items that, if not strictly observed, can result in serious injury to personnel.

CAUTION

These flags denote items that, if not strictly observed, can result in damage or destruction to equipment.

NOTE

These flags denote highlighted items.

Each PX Booster Pump should be inspected immediately upon arrival and any irregularities due to shipment should be reported to the carrier. PX Booster Pump units are securely packed with plugs in the fittings to protect the unit from damage during transportation. Care must be taken during unpacking and handling to avoid damage to the PX Booster Pump.

CAUTION

When handling and installing a PX Booster Pump, care should be taken to avoid dropping the unit or putting undue strain on the port fittings to avoid internal damage. Do not lift or support the PX Booster Pump by the port fittings.

4.0 PRINCIPLE OF OPERATION

The PX Booster Pump is designed to be used in SWRO systems in conjunction with ERI's PX technology. The PX Booster Pump is a horizontal multistage centrifugal pump driven by a Totally Enclosed Fan Cooled (TEFC) motor. The PX Booster Pump boosts the pressure in the

high pressure portion of an SWRO system to make up the small pressure losses that occur through the SWRO membrane, the PX units and the associated piping. The PX Booster Pump is designed to withstand a high inlet pressure in a corrosive seawater environment.

Figure 4-1 shows the flow path of a PX Booster Pump installed in a typical SWRO system equipped with PX technology. The reject brine from the SWRO membranes (G) passes through the PX unit(s) where its pressure is transferred directly to a portion of the incoming raw seawater at up to 95% efficiency. This pressurized seawater stream (D), which is nearly equal in volume and pressure to the reject stream, passes through the PX Booster Pump (not the main high-pressure pump) to add the small amount of pressure lost to friction in the PX unit(s), the membranes, and the associated piping. The PX Booster Pump is specially designed to handle high operating pressures while consuming minimal energy to provide a small boost to the high-pressure flow. The PX Booster Pump also serves to drive the flow of the high-pressure stream through the PX unit(s) (G and D). Fully pressurized seawater then merges with the main seawater to the SWRO system after the main high-pressure pump. Example flow rates and pressures are listed in Table 4.1.

Figure 4-2. Typical SWRO System with PX Unit(s) and PX Booster Pump

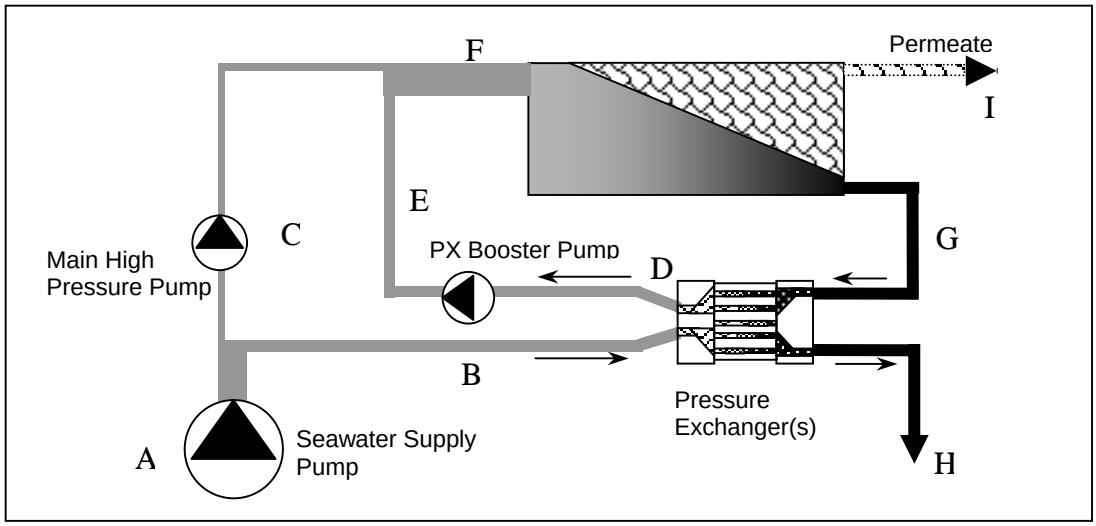

Table 4-1 - Example Flow Rates and Pressures

STREAM	DESCRIPTION	FLOW RATE	PRESSURE PSI / BAR
A	Seawater supply	330	29 / 2.0
B	PX LP Inlet/ Seawater	195	29 / 2.0
C	Main HP Pump outlet	135	1000 / 69
D	PX HP Outlet/ Seawater	195	957 / 66
E	Booster Pump Outlet/ Seawater	195	1000 / 69
F	SWRO Feed Stream	330	1000 / 69
G	PX HP Inlet/ Reject	200	971 / 67
H	PX LP Outlet/ Reject	200	15 / 1.0
I	SWRO Product Water	130	5 / 0.3

In an SWRO system equipped with PX technology, the main pump is sized to equal the SWRO permeate flow plus a small amount of bearing lubrication flow, not the full SWRO feed flow. Therefore, PX technology significantly reduces flow through the main pump. This point is significant because a reduction in the size of the main pump results in lower operating costs. In a typical SWRO system equipped with PX technology, the main pump will provide 41% of the energy, the booster will provide 2% and the PX unit(s) will provide the remaining 57%. Since the PX energy recovery device uses no external power, the total power savings is 57% compared to a system with no energy recovery.

It is important to note that the PX unit(s) and associated boost pump are sized for 100% of the reject flow. The role and size of the main high-pressure pump is reduced to that of a "make-up pump" to compensate for the water that is exiting the SWRO system as permeate.

NOTE

ERI encourages plant designers and engineers to submit P&IDs to ERI for engineering review, especially for large or complex SWRO systems.

5.0 INSTALLATION

The PX Booster Pump should be installed in a dry, sheltered location. Some type of drainage should be provided beneath the pump to allow standing water to drain when performing maintenance or repair. See installation drawings in Section 13.0 for pump dimensions, interface locations and minimum maintenance envelope requirements.

1. Place the PX Booster Pump in an appropriate location and mount the motor securely; making sure that the base of the unit is permanently supported.
2. Connect the inlet and outlet of the pump to the appropriate points. Proper piping, piping support, and motor mounts must be implemented to minimize external stresses on all piping fittings. Flexible couplings should be used for joining fittings and piping. See Section 13.0 for appropriate connection dimensions and specifications. PX Booster Pumps are shipped with the inlet oriented vertically upward. The inlet housing can be rotated either left or right to a horizontal orientation. Remove the four (4) bolts that connect the inlet housing to the yellow bell housing, rotate the pump head and replace the bolts. Torque bolts to 12 ft-lbs (16 N-m) as shown in Figure 7-4 below.

CAUTION

The PX Booster Pump is constructed from AL6XN or equivalent stainless steel. Inlet and discharge interconnecting lines should be constructed of suitable materials to avoid galvanic corrosion.

3. Connect the pump motor to a suitable electrical supply. See the motor plate or the inside cover of the motor electrical junction box for high and low voltage wiring diagrams. If no wiring diagram is evident on the motor, refer to Table 5-1. Connect a suitable ground to the pump motor.

4. The SWRO-PX system must include pressure gauges upstream and downstream of the PX Booster Pump and a high-pressure flow meter in the high-pressure circuit.

Table 5-1 – Motor Wiring

MOTOR MANUFACTURER		L1	L2	L3	JOIN
General Electric	High Voltage	1	2	3	4+7, 5+8, 6+9
	Low Voltage	1+7	2+8	3+9	4+5+6
Leeson	High Voltage	1+12	2+10	3+11	4+7, 5+8, 6+9
	Low Voltage	1+6+7+12	2+4+8+10	3+5+9+11	—

DANGER

Disconnect electrical supply before installing and/or servicing the pump. Failure to do so can cause serious injury or death to personnel.

CAUTION

Strictly observe all applicable electrical codes and regulations governing the installation and wiring of electrical equipment.

CAUTION

Piping must be independently supported. Do not allow piping to place a load on the PX Booster Pump.

NOTE

The power supply should always be of a greater service rating than the requirements of the pump. Never connect the pump to a line that services another electrical device. The pump should have dedicated power circuit with proper fuse or breaker protection.

NOTE

The PX Booster Pump is designed to be used in conjunction with a variable frequency drive and high-pressure flow meter.

NOTE

Check for proper motor rotation upon start up.

6.0 OPERATION

6.1 Specifications

The successful use of the PX Booster Pump depends on observing some basic operating conditions and precautions. The PX Booster Pump must be installed, operated and maintained in accordance with this manual and good industrial practice to assure safe operation and a long service life. Failure to observe these conditions and precautions can result in violation of the warranty, damage to the equipment, and/or harm to personnel.

6.1.1 System Performance Specifications

Table 6-1 provides a summary of system performance specifications. See Section 12.0 for flow and pressure curves.

Table 6-1 - System Performance Specifications

Parameter	Specification
Raw Water Temperature Range:	33-113°F (1-43°C)
Maximum Outlet Pressure:	1200 psi / 83 bar
Minimum Inlet Pressure:	15 psi / 1.0 bar
Design Flow Range: *	
HP-8503	30-110 gpm (7 – 25 m3/hr)
HP-8504	30-110 gpm (7 – 25 m3/hr)
HP-1253	40-190 gpm (9 – 43 m3/hr)
HP-1254	40-190 gpm (9 – 43 m3/hr)
HP-2402	80-300 gpm (18 – 68 m3/hr)
HP-2403	80-300 gpm (18 – 68 m3/hr)

* 60 Hz / 3450 rpm

6.1.2 Precautions and Conditions

The following precautions / conditions apply:

- Piping connections to the pump must be designed so as not to induce stress on the pump or motor.
- Ensure that all flexible connections are secure and tight before operating pump.
- Under no circumstances shall the inlet pressure or outlet pressure exceed 1,200 psig (83 bar).
- Ensure sufficient feed water supply. The PX Booster Pump should be thoroughly purged of air before startup. Operating the PX Booster Pump with feed pressures less than 15 psi may result in damage to PX Booster Pumps internal components. Never run pump dry.

Do not allow the high-pressure reject and/or seawater to exceed 1,200 psi (83 bar). If necessary, install a pressure switch and/or safety valve in the high-pressure line(s) to ensure the system does not exceed 1,200 psi (83 bar).

Allowable operating ranges for individual PX Booster Pumps are listed in Table 6-1. PX Booster Pumps are not designed to operate outside of these ranges.

6.1.4 Physical Characteristics

See Section 13.0 for weights and dimensions. Connections dimensions and requirements are provided in Table 6-2.

Table 6-2 - Connection Dimensions and Requirements

Utility	Connection	Maximum Pressure (psi / bar)
Inlet	3” Flexible Coupling	1,200 / 83
Discharge	3” Flexible Coupling	1,200 / 83

6.1.5 Utility Requirements

Power requirements are provided on the nameplate on the top of all PX Booster Pump motors. Horsepower requirements are provided in Table 6-3.

Table 6-3 – Motor Horsepower Requirements

HP-8503	HP-8504	HP-1253	HP-1254	HP-2402	HP-2403
5	7.5	10	15	15	20

6.1.6 Spare Parts

A listing of recommended ERI spare parts is provided in Table 6-4. O-ring kits are recommended for disassembly and inspection. Rebuilt kits provide impellers, stage assemblies and O-rings.

Table 6-4 - Recommended Spare Parts

DESCRIPTION	QTY	O-RING KIT PART NUMBER	REBUILD KIT PART NUMBER	MECHANICAL SEAL KIT
HP-8503	1	20005-02	20005-01*	20004-01
HP-8504	1	20006-02	20006-01*	20004-01
HP-1253	1	20007-02	20007-01*	20004-01
HP-1254	1	20008-02	20008-01*	20004-01
HP-2402	1	20009-02	20009-01*	20004-01
HP-2403	1	20010-02	20010-01*	20004-01

* Includes Impellers, Stage Assemblies and O-rings

NOTE

Only genuine ERI spare parts should be used in PX Booster Pumps. Use of parts other than those specified by ERI will void the warranty.

6.2 Startup Procedure

Refer to the PX Operations and Maintenance manual for detailed startup and shutdown instructions for the PX device.

1. Verify system is de-energized and un-pressurized.
2. Check tightness of all lines and fittings.
3. Supply feed water to the SWRO system and the PX unit’s low-pressure inlet.

4. Verify that the inlet pressure to the PX Booster Pump is at least 15 psi as seen at the inlet of the main high-pressure pump. Verify that all air has been purged from the system. The pump cannot be run dry for even a few seconds. Damage will occur in seconds if the pump is started dry.

CAUTION

Never run the PX Booster Pump dry or with low feed flow. Operating with feed pressures less than 15 psi (1 bar) or below recommended the flow range can cause damage to the pump's internal components.

5. Jog the PX Booster Pump and verify that its rotation is correct.

NOTE

The PX Booster Pump should rotate in the clockwise direction when facing the rear of the motor.

6. Start the PX Booster Pump and verify that the pump is operating on the flow and pressure curves provided in Section 12.0.

6.3 Maintenance and Startup Log

A sample operating-log has been provided in Section 8.0 of this manual and must be submitted by fax or e-mail to Energy Recovery, Inc. in San Leandro, California upon completion of the startup and flow balancing routines. ERI requests submittal of this form with the initial startup data within 24 hours of startup. The data must be recorded daily and maintained during the life of the warranty in order to support any claims. Include pump serial number with all submittals.

NOTE

A sample operating-log has been provided at the end of Section 8.0 and must be submitted by fax or e-mail to Energy Recovery, Inc. upon completion of the startup and balancing routines. The data must be recorded daily and maintained during the life of the warranty in order to support any claims. Include serial number with submittal.

7.0 MAINTENANCE INSTRUCTIONS

7.1 General

The table below details the specific recommended pump maintenance requirements for the ERI's PX Booster Pump product line:

Table 7-1 - Periodic Maintenance Task Frequency

	Weekly	3 Months	As Required	Labor Hours (approximate)
Inspect connections	•			0.1
Inspect mechanical seal	•			0.1
Lubricate pump motor		•		0.2
Change mechanical seal			•	2.0

7.2 Lubricate PX Booster Pump Motor

Motor bearings should be checked daily for temperature and noise. Motor bearings must be lubricated a minimum of every three months. Use a grease gun and high-quality ball bearing grease such as Shell Dolium R or Chevron SR1 2. Refer to the motor manufacturer's websites for additional guidance and information.

7.3 Mechanical Seal Maintenance

A mechanical seal is used to seal the rotating shaft. This seal will require replacement approximately every 12-18 months. An indication that maintenance is required will be a leak or drip from the rear of the pump into the bell housing. Mechanical seal kits are available from ERI. The kit includes the components listed in Table 7-2 and illustrated in Figure 7-1.

Table 7-2 - Mechanical Seal Kit - ERI Part Number 20004-01

PART NUMBER	DESCRIPTION	QUANTITY
10055-01	SHIM	2
10066-01	RETAINING RING, 3 /4"	1
10117-01	DOWEL PIN	2
10122-01	SPACER	1
10123-01	MECHANICAL SEAL	1
10124-01	FENDER WASHER	2
10128-01	ALLEN WRENCH, 3/32"	1
10134-01	THREAD LOCKER	1
10160-01	O-RING, -225	1
80027-01	MECHANICAL SEAL O&M MANUAL	1

ERI offers a tool kit (ERI Part Number 20003-01) for PX Booster Pump maintenance operations. Alternately, a list of tools and materials recommended for maintenance of the mechanical seal are provided in Table 7-3.

Table 7-3 - Recommended Tools and Materials

Pump Model	Tool	Application
all	9/16-inch Wrench	Bolts between Inlet Housing and Bell Housing
all	3/4-inch Wrench	Bolts between Bell Housing and Motor
8500-pumps	3/16-inch Allen/Hex Wrench	Coupling
1250- and 2400-pumps	1/4-inch Allen/Hex Wrench	Coupling
all	3/32-inch Allen/Hex Wrench	Seal Set Screws
all	Anti-Seize Compound	All Threads
all	Water Soluble Lubricant	O-Rings

Figure 7-1 - Section View of Shaft and Seal Components

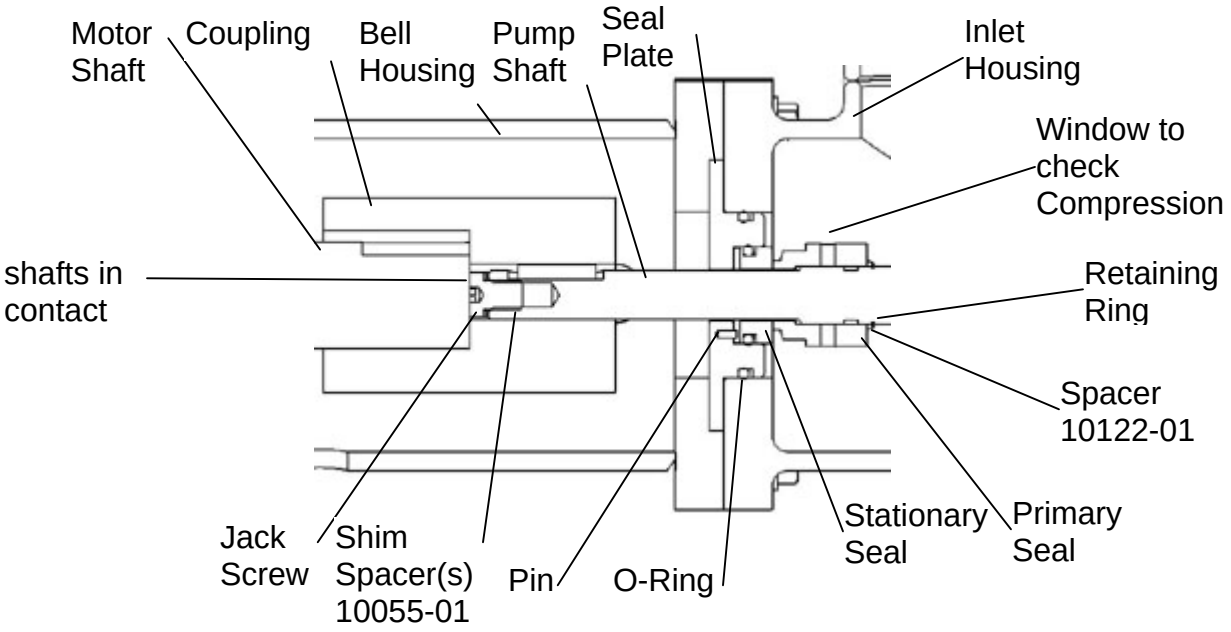

The following procedure provides instructions for removing an old seal and inserting a new one.

7.3.1 Remove the Old Mechanical Seal

1. Verify system is de-energized and un-pressurized.
2. Disconnect the flexible coupling connections from the inlet and outlet of the PX Booster Pump and allow water to drain from system.
3. Unbolt the motor base from the floor.
4. Stand the PX Booster Pump on the motor in a vertical orientation as shown in Figure 7-2.
5. Partially loosen (1-3 turns) the eight (8) shaft coupling screws inside the bell housing. There is an access slot for these screws at the side of the bell housing. See Figure 7-3.
6. Remove the four bolts that hold the inlet housing to the bell housing with a 9/16” wrench as shown in Figure 7-4.

Figure 7-2 - Pump Oriented Vertically

Figure 7-3 - Loosen Coupling Screws

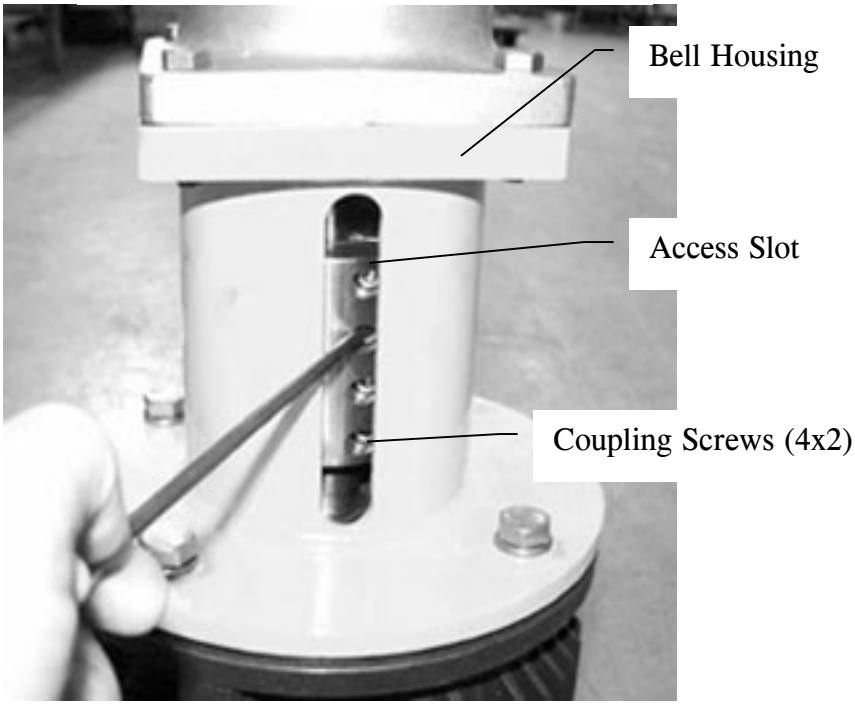

Figure 7-4 - Remove Pump from Bell Housing

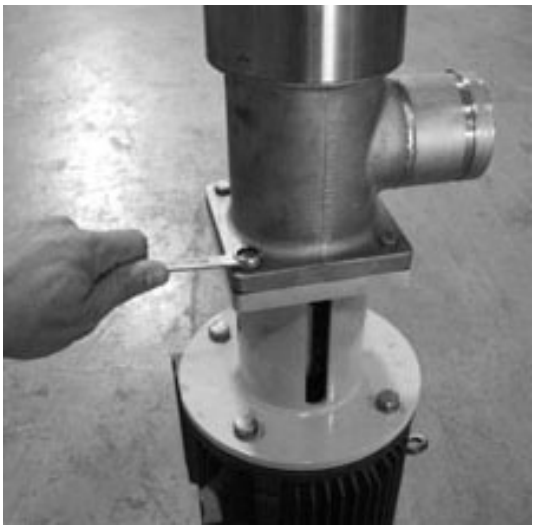

Figure 7-5 - Remove Seal Plate from Inlet

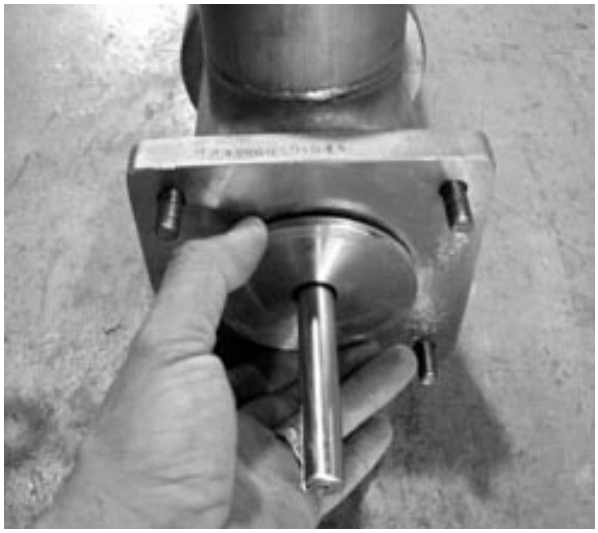

7. Pull the pump, shaft and seal out of the bell housing and away from the motor.
8. Remove the seal plate from the inlet housing as shown in Figure 7-5. It may be necessary to pull on the pump shaft to create an initial gap between the seal plate and the inlet.
9. The mechanical seal includes the primary seal and the stationary or mating plate as shown in Figure 7-6. Extract the stationary plate from the seal plate by pushing through the seal plate with a rod as shown in Figure 7-7. Remove stationary plate from the seal plate.

Figure 7-6 - Mechanical Seal Components

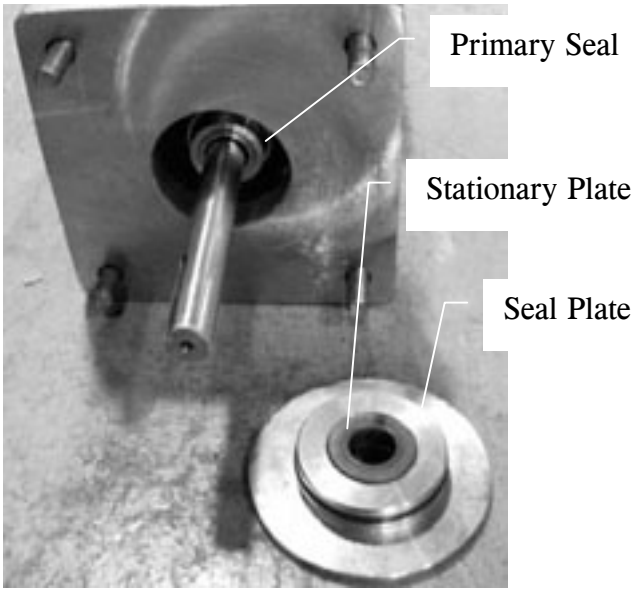

Figure 7-7 - Extract Stationary Plate from Seal Plate

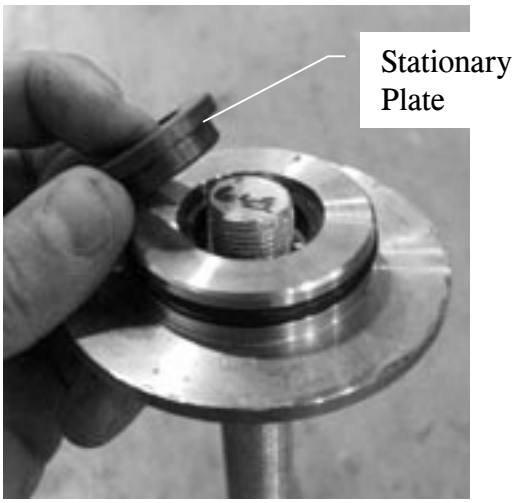

10. Loosen the four (4) set screws (3/32 inch hex) that hold the primary seal onto the shaft as shown in Figure 7-8. Be careful not to strip the set screws. If a particular set screw is very tight, it may be necessary to rotate the shaft and loosen a different set screw first.

Figure 7-8 - Loosen Set Screws

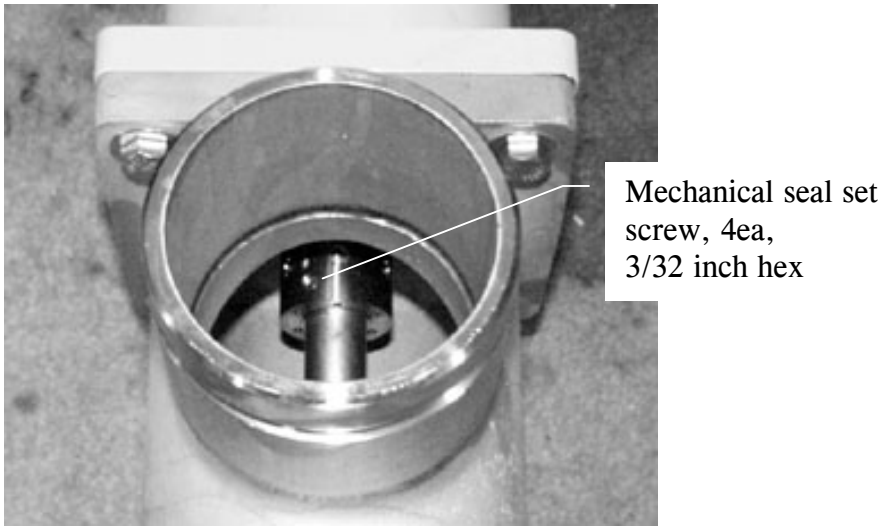

11. Slide the primary seal off the shaft and out of the pump.
12. Remove the bell housing from the motor as shown in Figure 7-9.
13. Remove the coupling from the motor shaft. Disassemble the coupling as shown in Figure 7-10. Clean the coupling and the shaft keys to remove any salt deposits or debris.

CAUTION

Keep the shafts and coupling clean and free of dirt, rust and foreign matter. Use plenty of anti-seize upon reassembly to ensure easy disassembly the next time.

Figure 7-9 - Remove Bell Housing

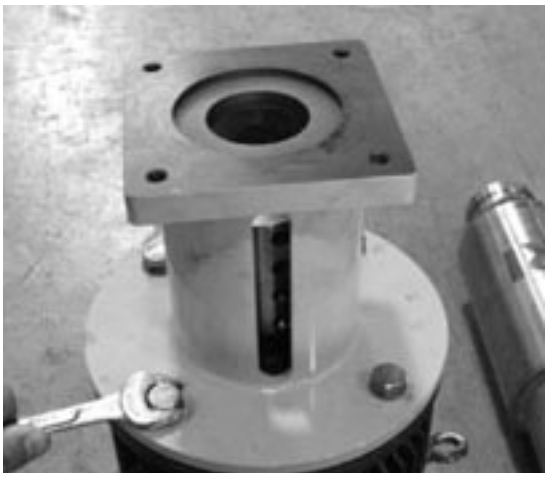

Figure 7-10 - Disassemble Coupling and Clean Components

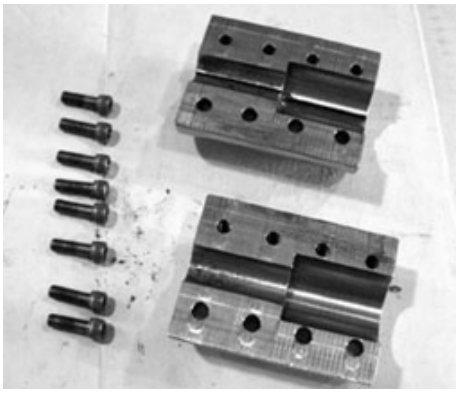

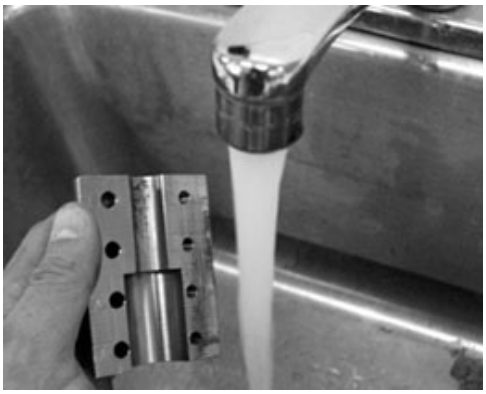

7.3.2 Install the New Mechanical Seal

Before installing the new mechanical seal, completely remove the pump head, the bell housing and the coupling as described above.

1. Reassemble the coupling using plenty of antiseize on the bolts and inside of the coupling. Apply antiseize to the motor shaft.
2. Install the coupling onto the motor shaft as shown in Figure 7-11. Use plenty of antiseize.
3. Install the bell housing onto the motor as shown in Figure 7-11. Use anti-seize compound on the bolt threads. Make sure that the drainage hole is oriented so that it will be on the bottom of the bell housing when the PX Booster Pump is reinstalled. Torque the bolts to 40 foot-pounds (ft-lbs) / 58 N-m.

Figure 7-11 – Install Coupling and Bell Housing onto Motor

4. Lubricate the o-ring in the new primary seal with a water-soluble lubricant. Install new spacer ring and new primary seal onto the pump shaft. Slide these components onto the shaft until they contact the retaining ring. See Figure 7-12 and 7-13 for the correct sequence. Tighten the three set screws to 7 inch-pounds (in-lbs) / 0.79 Newton-meters (N-m) torque using a 3/32-inch hex wrench.

Figure 7-12 - Primary Seal Sequence

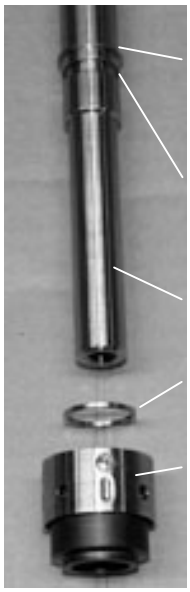

Figure 7-13 - Primary Seal Assembly

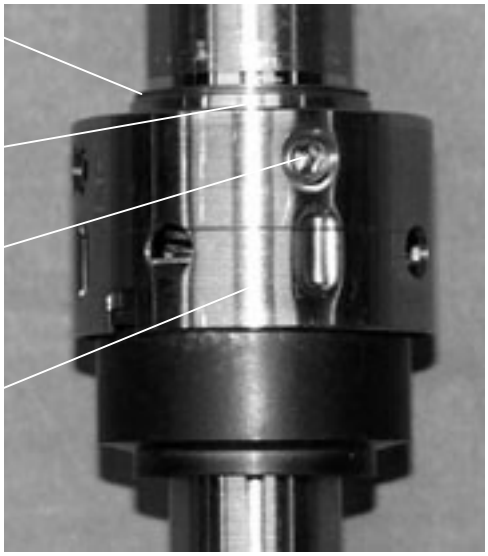

5. Insert the anti-rotation pin into the seal plate as shown in Figure 7-14. Once inserted, the pin should not protrude more than 1/16-inch (1.6 mm). Assure that there is no debris inside the seal plate that would prevent the stationary seal from fully seating.
6. Lubricate the O-ring of the new stationary seal with a water-based lubricant such as glycerin or soap. Insert the new stationary seal into the seal plate. Be sure to line up the groove in the bottom of the stationary ring with the anti-rotation pin as shown in Figure 7-15. The stationary seal must seat flat and level in the seal plate.

Figure 7-14 - Insert Anti-Rotation Pin

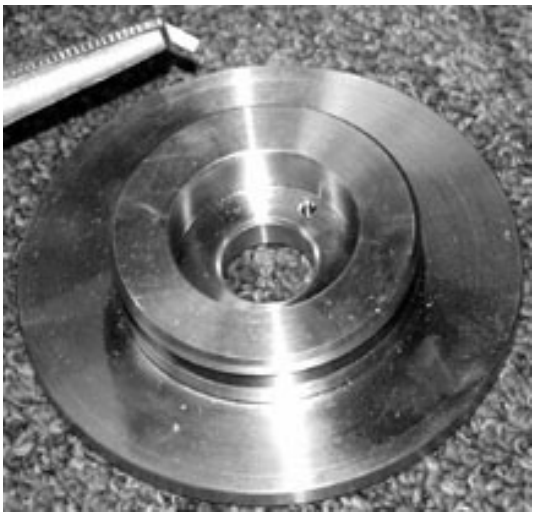

Figure 7-15 - Stationary Seal, Line up Pin with Groove

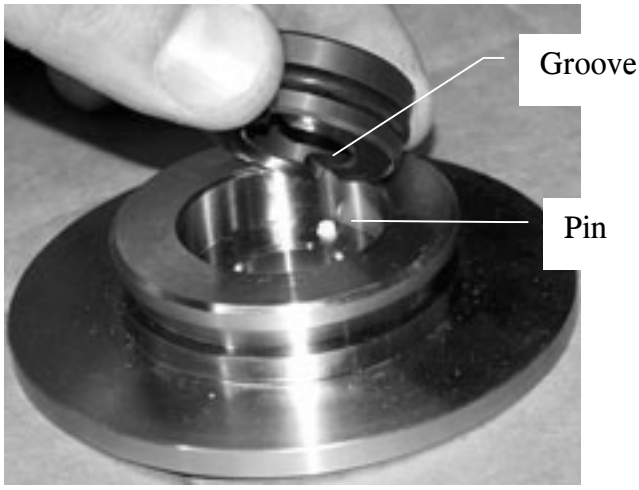

7. Slide the seal plate onto the shaft as shown in Figure 7-16.

Figure 7-16 – Assemble the Shaft, Seal and Seal Plate, Install into Inlet Housing

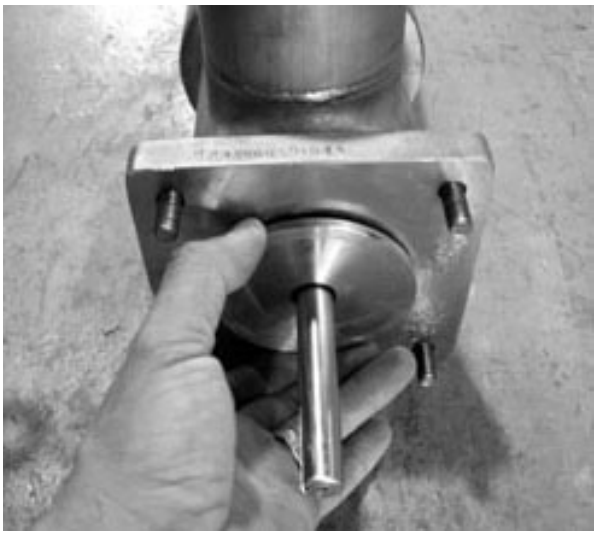

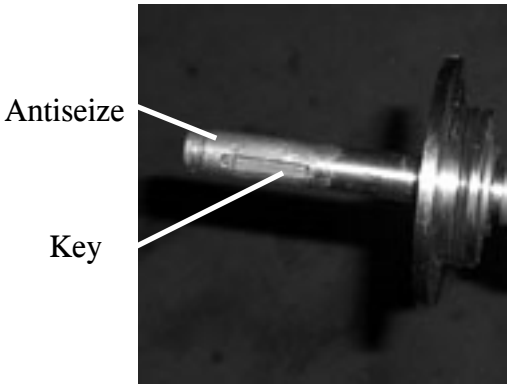

8. Align the shaft key with the slot in the coupling and install the pump onto the bell housing as shown in Figure 7-17.

Figure 7-17 – Install Pump into Bell Housing

9. Assemble the seal compression tool components using a flexible coupling as shown in Figure 7-18. Alternately, compress seal manually as shown in Figure 7-19.

Figure 7-18 – Assemble and Install Seal Compression Tool Components

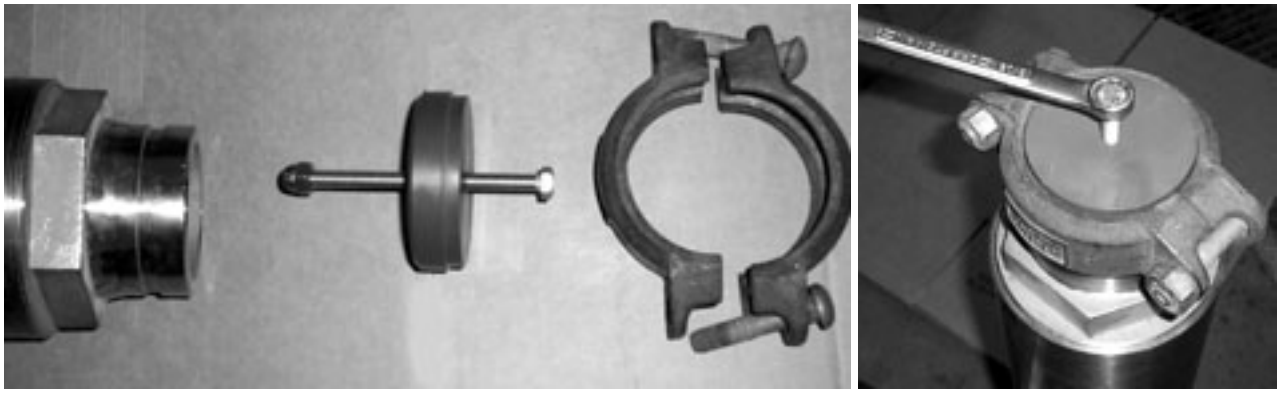

10. Check the seal compression by applying downward force on the pump shaft while looking into the inlet housing as shown in Figure 7-19.

Figure 7-19 – Install Pump onto Bell Housing

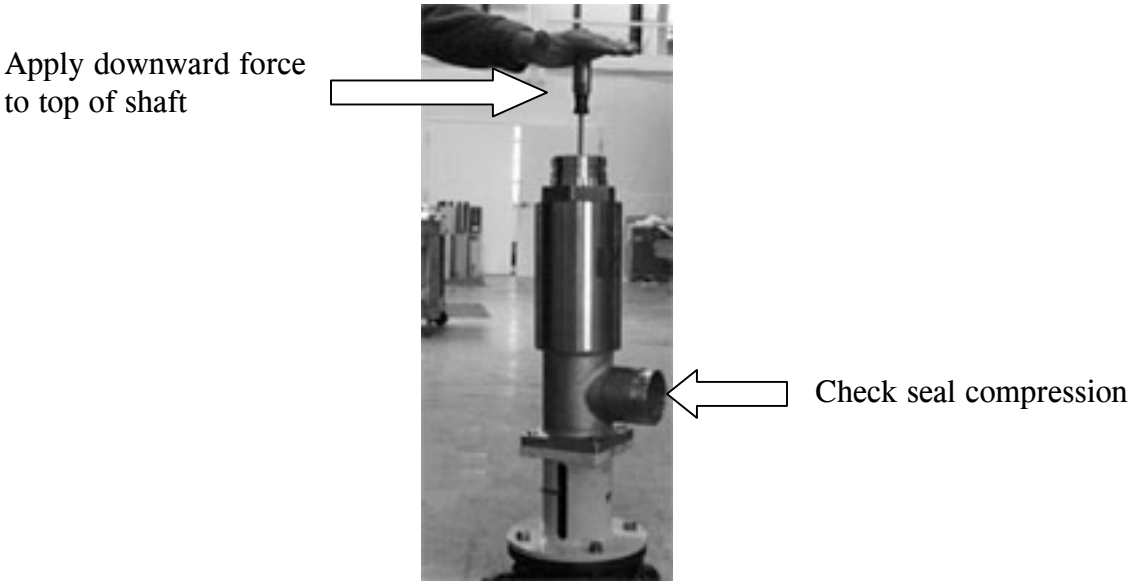

11. Inspect the mechanical seal inside the inlet housing. Check the compression of the mechanical seal by looking into the circular window as shown in Figure 7-20. If seal is not correctly compressed, remove the pump and install a fender washer into the shaft coupling or a shim spacer onto the shaft as shown in Figure 7-21. Reassemble pump according to the steps above.

Figure 7-20 - Check Seal Compression

Circular Window to Check Compression

Under Compressed | Correct Compression | Over Compressed

Figure 7-21 – Add or Remove Fender Washer(s) or Shim Spacer(s) to Change Seal Compression

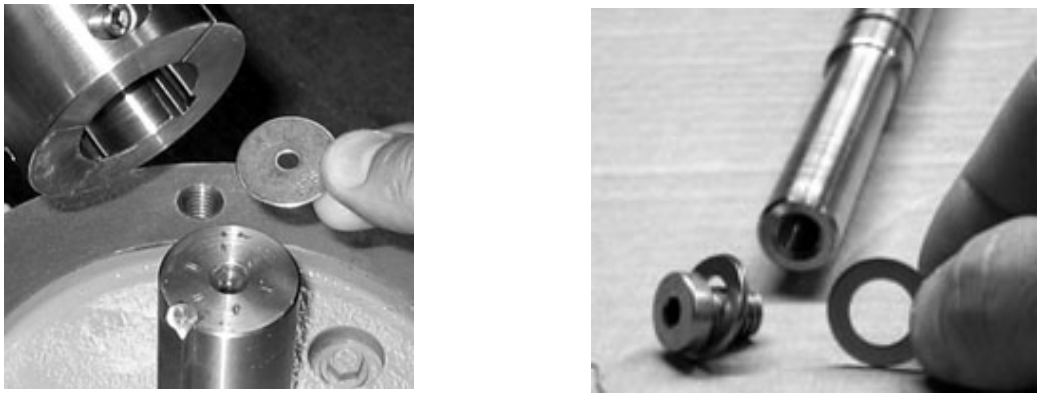

12. Verify that the shaft keys are in place.
13. Line up the key of the pump shaft with the slot in the shaft coupling inside the bell housing as shown in Figure 7-22 below.
14. Install the pump head onto the bell housing. Install the four (4) bolts between the pump to finger tight.

Figure 7-22 – Install Pump into Bell Housing

Align shaft key with slot in coupling

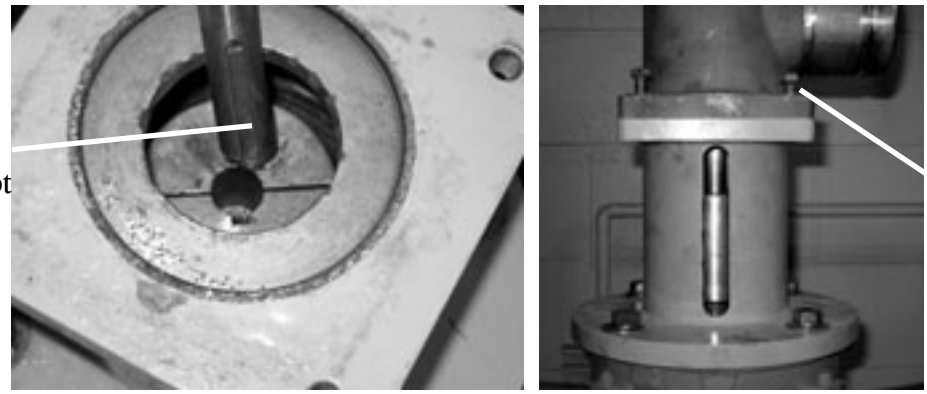

Finger tight

15. With the pump and motor shafts in contact, tighten the eight (8) coupling screw as shown in Figure 7-23. NOTE: THE PUMP AND MOTOR SHAFT MUST BE IN CONTACT.

Figure 7-23 – Tighten Coupling onto Shafts

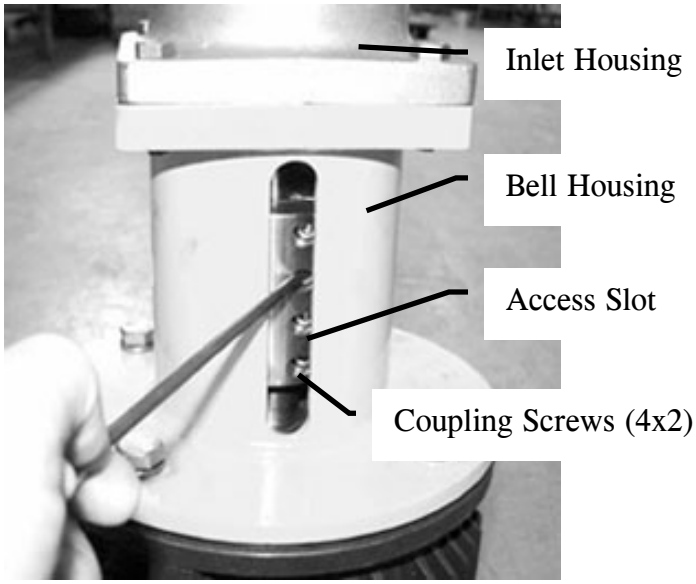

16. Tighten both halves of the coupling evenly making sure that the gap between the two halves is equal as shown in Figure 7-24.

Figure 7-24 - Check Gap Between Coupling Halves

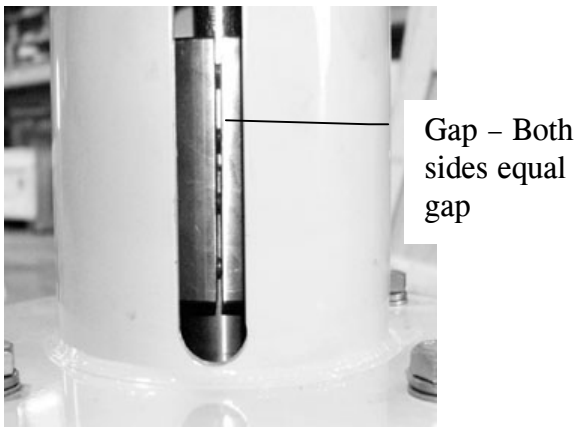

17. Torque the coupling screws according to the requirements listed in Table 7-4. Make sure the gap between the two halves of the coupling is even on both sides as shown in Figure 7-24. The coupling must be tightened evenly and fully to prevent an out of balance condition, excessive vibration and premature motor bearing failure.

Table 7-4 - Shaft Coupling Torque Requirements

	HP-8503	HP-8504	HP-1253	HP-1254	HP-2402	HP-2403
Coupling Screw Torque	8 ft-lb / 11 N-m	8 ft-lb / 11 N-m	8 ft-lb / 11 N-m	8 ft-lb / 11 N-m	12 ft-lb / 16 N-m	12 ft-lb / 16 N-m

CAUTION

The coupling screws must be tightened evenly according to the torque requirements. The gap between the two halves of the coupling must be equal on both sides. Failure to tighten the coupling evenly and fully could cause an out of balance condition resulting in excessive vibration and premature motor bearing failure.

18. Tighten the four (4) bolts between the inlet housing and the bell housing. Torque bolts to 12 ft-lbs (16 N-m) as shown in Figure 7-25. If the bolts between the pump and the bell housing were tightened before the shaft coupling was tightened, loosen all four (4) bolts 2 revolutions. Then torque the four (4) bolts between the inlet housing and the bell housing to 12 ft-lbs (16 N-m) as shown in Figure 7-25.

Figure 7-25 – Final Step: Tighten Inlet to Bell Housing

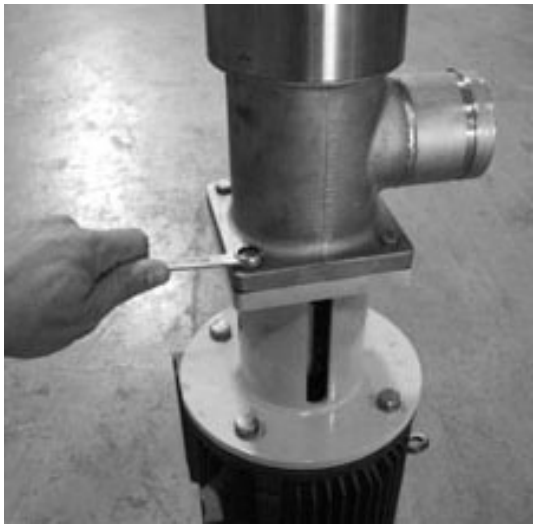

CAUTION

Tighten coupling before tightening the bolts between the inlet housing and the bell housing.

19. Check to see that the shaft can turn relatively free by hand. The purpose for the ideal impeller gap spacing is to keep the impellers free inside the bowls. The bowls are held in place by the compression applied by the outlet nozzle while the splined shaft spins the impellers. If the gap spacing is incorrect and the impellers rub/ interfere with the bowls, premature failure of the pump may occur. A small amount of rubbing during an initial break in period is acceptable.
20. After the pump is reassembled and reinstalled, make sure that water is fully flowing through the unit before starting. THE PUMP CANNOT BE RUN DRY FOR EVEN A FEW SECONDS. Damage will occur in seconds if the pump runs with insufficient feed flow.

7.4 Disassembly of Wet End

The following procedure should be used when rebuilding the wet end of PX Booster Pumps.

1. Verify that the system is de-energized and un-pressurized.

2. Disconnect the inlet and outlet connections of the PX Booster Pump and allow water to drain from system.
3. Loosen the pump head with a pipe wrench on the outlet nozzle as shown in Figure 7-26.
4. Loosen the shell with a strap wrench as shown in Figure 7-27.

Figure 7-26 – Loosen Outlet Nozzle

Figure 7-27 – Loosen Shell

5. Stand up the PX Booster Pump in a vertical orientation as shown in Figure 7-1.
6. Remove the outlet nozzle and shell. Remove the snap ring from the end of the shaft.
7. Remove the stage assemblies down to the inlet nozzle as shown in Figure 7-28. Inspect all stage assemblies and components for damage and/or wear.

Figure 7-28 – Remove Shell and Stages

7.5 Assembly of Wet End

This procedure assumes that the pump has been completely disassembled.

1. Clean the face of the motor.
2. Clean the coupling components as shown in Figure 7-14 above. Install the shaft coupling onto the motor shaft as shown in Figure 7-29 below.
3. Install the bell housing as shown in Figure 7-29. Be sure the drainage hole is oriented downward toward the floor. Torque bolts to 40 ft-lbs (58 N-m).

Figure 7-29 - Install Coupling and Bell Housing

4. Install the seal and seal plate onto the shaft as shown in Figure 7-30.

Figure 7-30 – Install seal and seal plate onto shaft

5. Insert the shaft assembly into the bell housing as shown in Figure 7-31.
6. Check the seal compression while applying downward force on the pump shaft so that the pump shaft and motor shaft are in contact.

Figure 7-31 – Insert Shaft Assembly into Bell Housing and Coupling

Align shaft key with slot in coupling

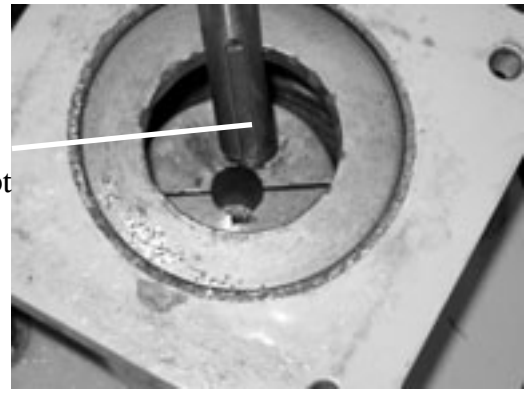

Apply downward force on shaft

7. Check the compression of the mechanical seal while applying downward force on the shaft by looking into the circular window as shown in Figure 7-32. If seal is not correctly compressed, remove the pump and install a fender washer into the shaft coupling or a shim spacer onto the shaft as shown in Figure 7-33. Reassemble pump according to the steps above.

Figure 7-32 - Check Seal Compression

Figure 7-33 – Add or Remove Fender Washer(s) or Shim Spacer(s) to Change Seal Compression

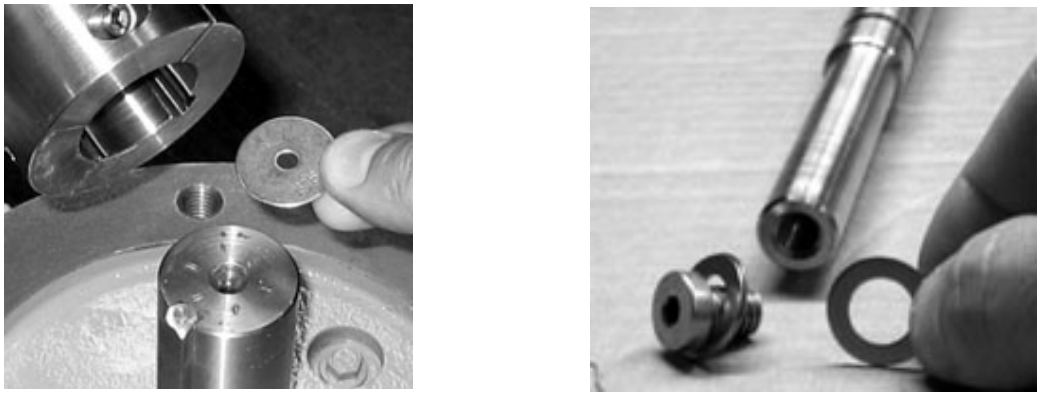

8. When the seal compression is correct, torque the coupling screws according to the requirements listed in Table 7-4 above. Make sure the gap between the two halves of the coupling is even on both sides as shown in Figure 7-34. The coupling must be tightened evenly and fully to prevent an out of balance condition, excessive vibration and premature motor bearing failure.

Figure 7-34 - Check Gap Between Coupling Halves

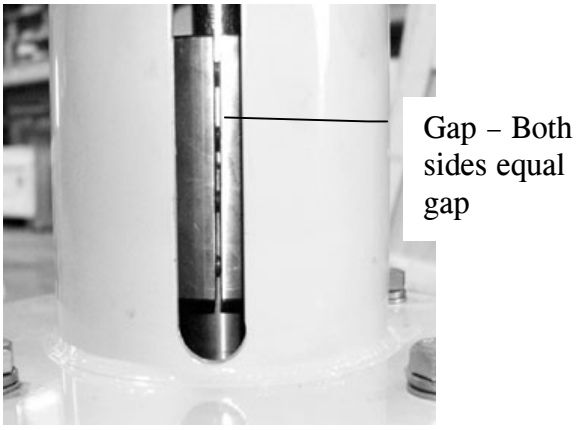

9. Install the first impeller. Set the gap between the impeller and the wear ring of the diffuser plate to 1/16" (1.6mm) $\pm$ 1/32” (0.8mm) as shown in Figure 7-35. Remove the impeller and add or subtract spacers onto the shaft as necessary to adjust the gap. For 2400-Series PX Booster Pump models, the gap between the impeller and the wear ring cannot be directly viewed. In this case, measure the distance between any two features on the diffuser plate and the impeller as shown in Figure 7-36. Record the measurement. Then raise the

diffuser plate until it contacts the impeller. Measure the gap again. The difference between the measurements indicates the gap distance. Remove the impeller and add or subtract spacers onto the shaft as necessary to adjust the gap.

Figure 7-35 - Install First Diffuser Plate

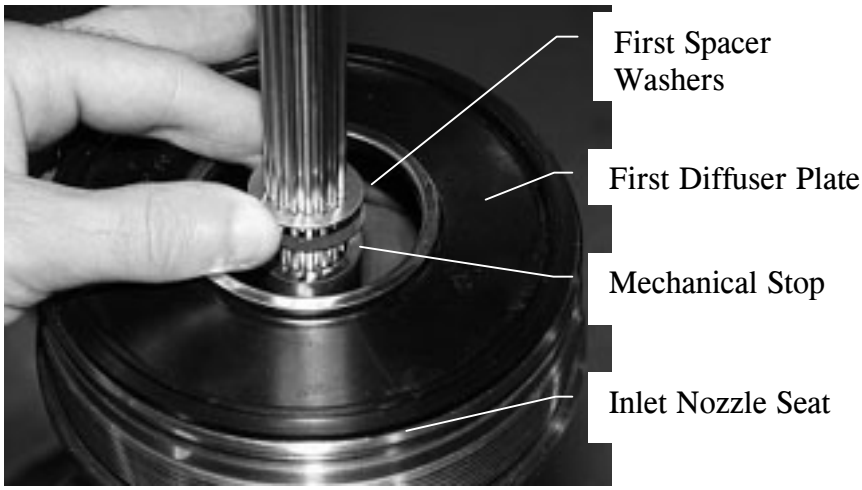

Figure 7-36 - Adjust the Gap Between the Impeller and Diffuser Plate Using Spacers

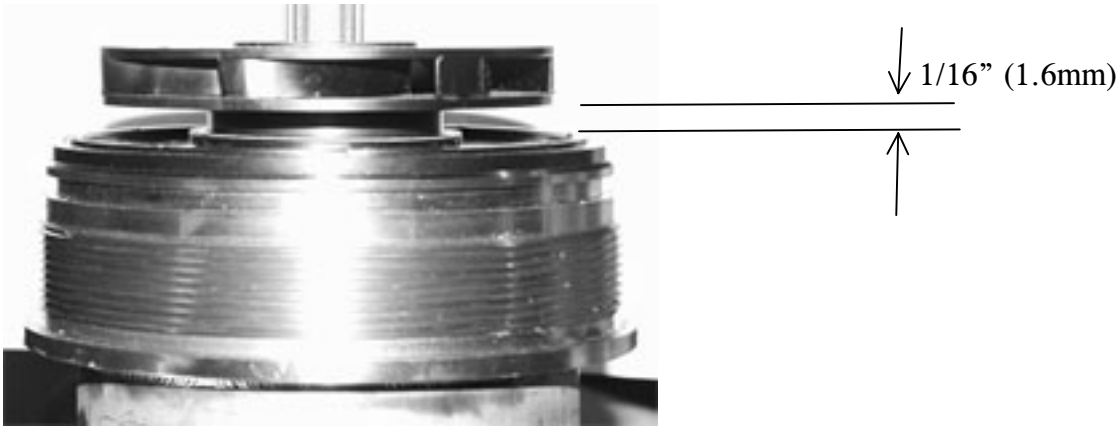

Figure 7-37 - Set the Gap Using Measurements at the Edge of the Parts for 2400-Series Pumps

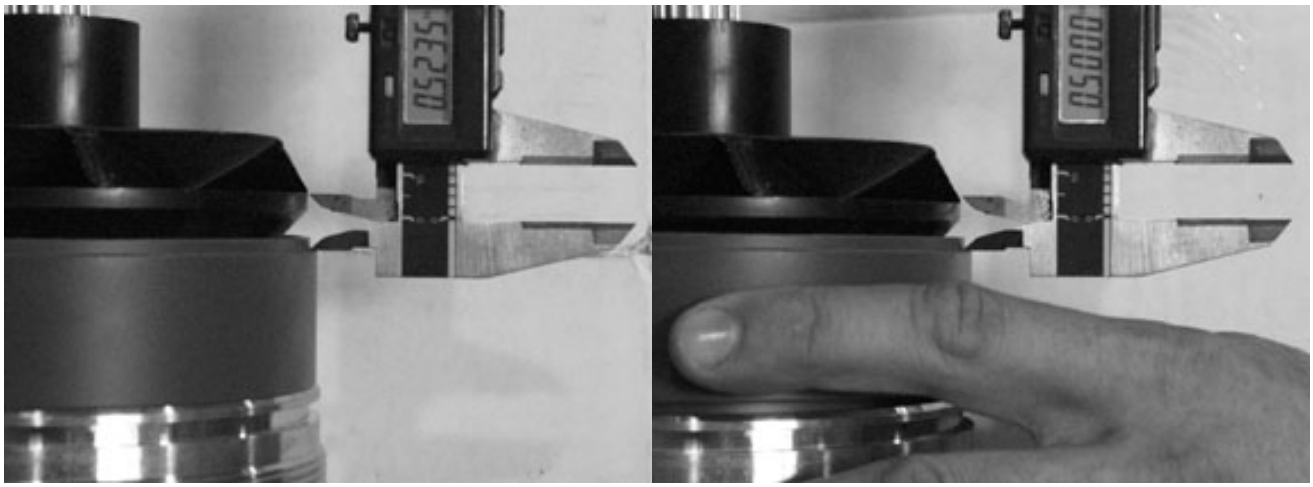

10. The next item to go on the shaft is a thrust washer, then a bearing journal, then a diffuser bowl. The diffuser bowl, spacer washer (optional), bearing journal, thrust washer, impeller and diffuser plate make up a complete stage assembly as shown in Figure 7-38. Stack in the order shown in Figure 7-38 or 7-39 until the pump is complete.

Figure 7-38 - Complete Stage Assembly for 8500- and 1250-Series Pumps

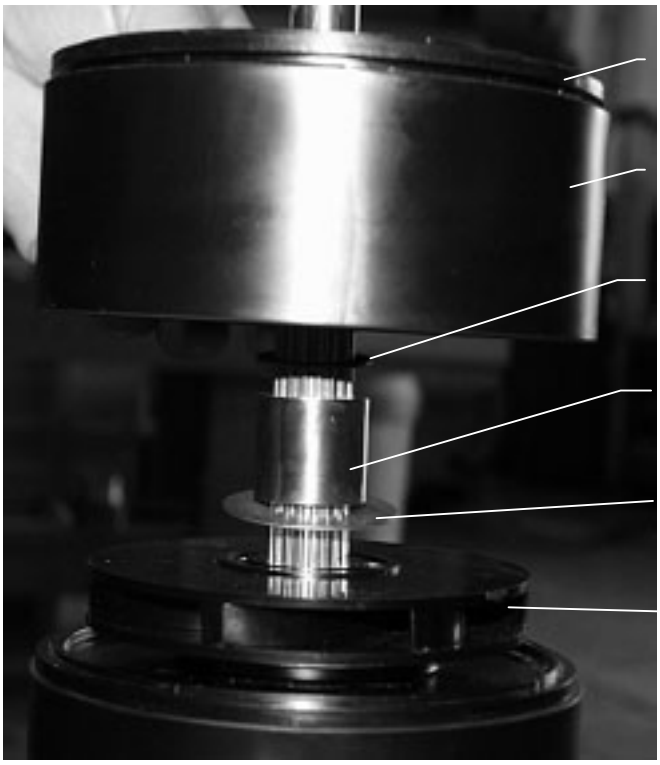

Figure 7-39 - Complete Stage Assembly for 2400-Series Pumps

11. Install the last diffuser plate. Install the snap ring as shown in Figure 7-40 or 7-41.

Figure 7-40 - Install Snap Ring, 2400-Series

Figure 7-41 - Install Snap Ring, 8500-, 1250-Series

12. Install the shell. Apply anti-seize only to the threads of the inlet housing and shell and wipe away excess. Use a lot of anti-seize to avoid galling and to facilitate disassembly, however, avoid getting anti-seize on the o-ring. Lubricate the o-ring with glycerin or liquid soap and install.
13. Screw the shell on to the inlet until it bottoms out and then apply enough torque with a strap wrench to make it tight as shown in Figure 7-43 below.
14. Install the outlet nozzle. Use sufficient anti-seize to avoid galling and to facilitate disassembly. Apply anti-seize only to the threads, wipe away excess and avoid getting anti-seize on the o-ring. Lubricate o-ring and install outlet nozzle. Apply 150 ft-lb (+20 ft-lbs – 0 ft-lbs) of torque to the outlet nozzle with a pipe wrench as shown in Figure 7-44 below. Insufficient torque will result in the bowls breaking free, spinning and pump failure.

Figure 7-42 - Install Shell and Outlet Nozzle

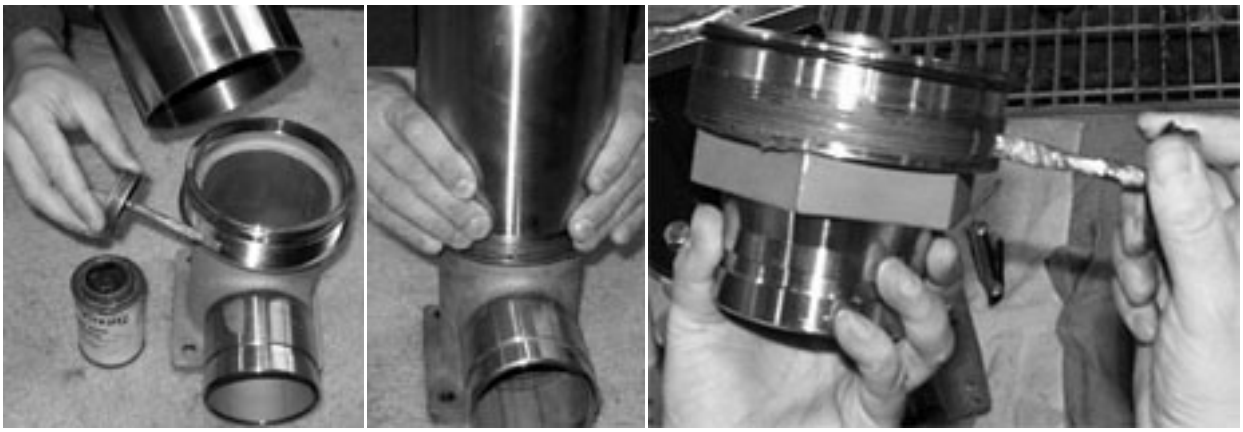

Figure 7-43 – Tighten Shell

Figure 7-44 – Tighten Outlet Nozzle

CAUTION

Insufficient torque on the outlet nozzle will result in the bowls spinning and pump failure.

15. At this point the wet end is completely reassembled. Check to see that the shaft can turn relatively free by hand. The purpose for the ideal impeller gap spacing is to keep the impellers free inside the bowls. The bowls are held in place by the compression applied by the outlet nozzle while the splined shaft spins the impellers. If the gap spacing is incorrect and the impellers rub/ interfere with the bowls, premature failure of the pump may occur. A small amount of rubbing during an initial break in period is acceptable.

After the pump is reassembled and back on the RO plant make sure that water is fully flowing through the unit before starting. The pump cannot be run dry for even a few seconds. Damage will occur in seconds if the pump runs with insufficient feed flow. Refer to Section 6.2 for complete start up procedures.

CAUTION

Never run the PX Booster Pump dry or with low feed flow. Operating with feed pressures less than 15 psi (1 bar) or below recommended the flow range can cause damage to the pump's internal components.

7.6 Motor Bearing Service

The motor bearings in ERI motors will provide a long service life if properly and regularly lubricated. The motor manual included in Section 12.0 provides guidance for proper motor maintenance. In case of bearing failure, ERI supplies the replacement bearings listed in Table 7-5.

Table 7-5 – Replacement Motor Bearings

BOOSTER PUMP MODEL	BACK LOAD BEARING	FRONT THRUST BEARING
HP-8503	10228-01	10227-01
HP-8504	10228-02	10227-03
HP-1253 GE	10228-02	10227-03
HP-1253 Leeson	10228-05	10227-04
HP-1254	10228-04	10227-02
HP-2402	10228-04	10227-02
HP-2403	10228-04	10227-02

In addition to the replacement bearings, the following tools are required: bearing puller, bearing heater, snap ring removal tool, rubber mallet, all-thread, and appropriate sockets and/or wrenches.

The following procedure describes removal and replacement of motor bearings. Consult the current motor manual on the motor vendor's website for additional guidance or information:

LEESON: http://www.leeson.com/literature/tech_info/
GE: http://www.geindustrial.com/cwc/library?famid=23&lang=en_US)

DANGER

Ensure motor is disconnected from power source before servicing.

1. Verify that the system is de-energized and de-pressurized. Disconnect the motor from the power source.
2. Disconnect the inlet and outlet connections of the PX Booster Pump and allow water to drain from system.
3. Disconnect and remove pump head according to steps 1 though 6 of the Mechanical Seal Change procedure provided in Section 7.3 .
4. Remove the bell housing.
5. Remove the coupling from the motor shaft. Disassemble the coupling as shown in Figure 7-10. Clean the coupling and the shaft keys to remove any salt deposits or debris.
6. Remove the fan cover from the motor.
7. Remove fan snap ring.
8. Remove the fan.
9. Remove the rubber slingers (x2).
10. Remove the bearing lubrication covers (x2). See Figure 7-45.

Figure 7-45 – Remove Bearing Lubrication Covers

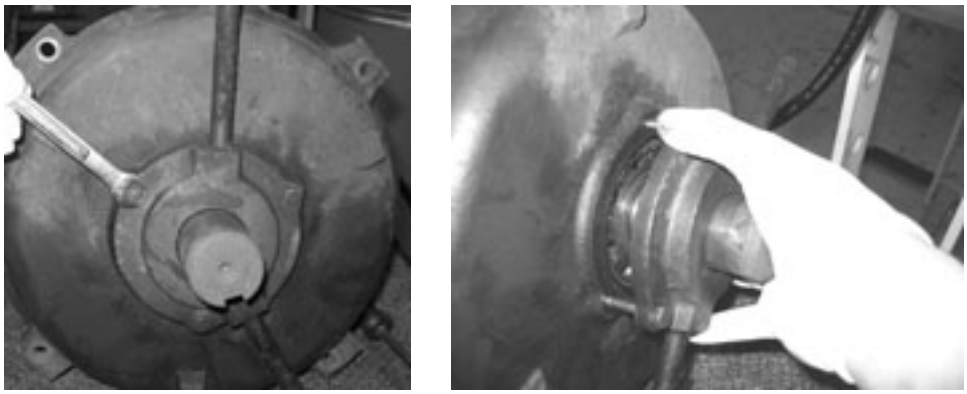

11. Remove the front bell from the motor body. See Figure 7-46.

Figure 7-46 – Remove Front Bell

12. Remove the back bell and the rotor and shaft assembly from the front of the motor body. See Figure 7-47.

Figure 7-47 – Remove Rotor and Shaft Assembly

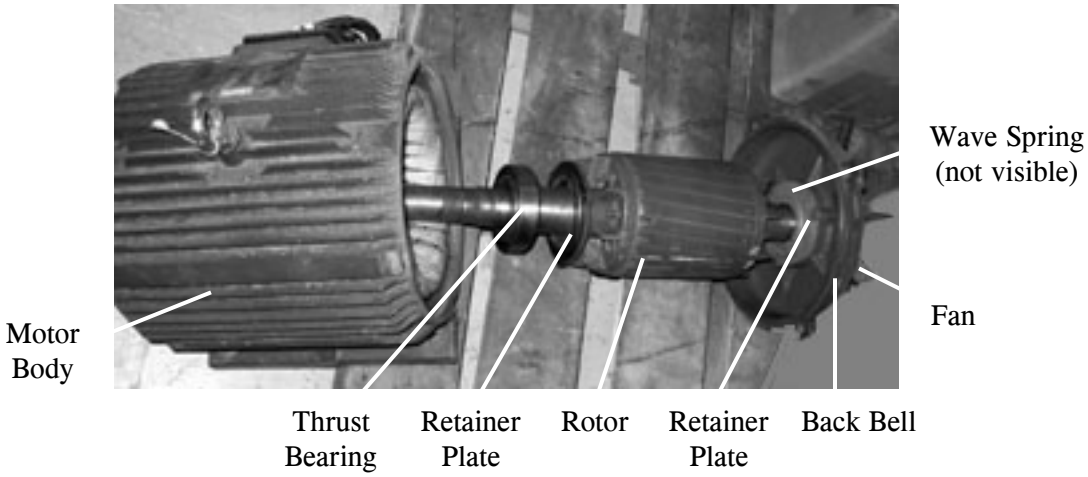

13. Remove the thrust bearing retaining ring. See Figure 7-48.

Figure 7-48 – Remove Bearing Retaining Ring

14. Use a bearing puller to remove the thrust bearing from the front of the shaft and the back bearing from the back of the shaft. See Figure 7-49.

Figure 7-49 – Pull Bearing with Bearing Puller

15. To install replacement bearings, heat inner bearing ring to 180°F (82°C) and slide onto shaft. See Figure 7-50.

Figure 7-50 – Heat Inner Ring to 180°F (82°C)

16. Insert rotor assembly into motor body.
17. Install back bell onto rotor and shaft assembly. It maybe necessary to tap back bell with a rubber mallet to ease the assembly process.
18. Ensure wave spring is inside counterbore in back motor bell.
19. Slide bearing lubrication cover onto shaft.
20. Use a piece of all thread to pull back bearing retainer cover towards the bearing lubrication cover. Install bolts to fasten back bearing retainer cover to bearing lubrication cover as shown in Figure 7-51.

Figure 7-51 – Use All-thread to Align Retainer Plate

21. Bolt on back motor bell.
22. Reinstall back rubber slinger.
23. Install fan.
24. Install fan retaining ring.
25. Install fan cover.
26. Repeat the preceding steps for front motor bell installation.
27. Grease the bearings with a grease gun through the grease fittings. Use a high-quality bearing grease such as Shell Dolium R or Chevron SR1 2.
28. Reassemble the pump according the procedures provided above.

29. After motor is assembled and connected to power supply, apply power momentarily then switch off (bump). Retighten the bolts on the front and back motor bells.

8.0 TROUBLE SHOOTING

This section is designed to guide the operator in determining the probable cause of the most frequently encountered problems. This section can only be a guide to solving potential problems within the pressure exchanger system and cannot contain all possible malfunctions, nor can it contain all possible ways to determine the cause of a malfunction. The best troubleshooting tool is the knowledge of the plant gained through experience. Any condition not covered in this section may be resolved by contacting Energy Recovery, Inc.'s Service Department.

Preliminary procedures:
1. Always check for proper valve configuration for the operation mode selected.
2. Always check for loose connections or broken wires when checking electrical parts. Checking for continuity and solid contact can prevent hours of wasted effort.
3. Always inspect and test equipment or apparatus for probable cause of malfunction before performing replacement.

When using the troubleshooting guide read all the probable causes before taking any action. Use good common sense and then use the probable cause that most likely fits the given situation.

Table 8-1 - Troubleshooting

SYMPTOM	PROBABLE CAUSE	CORRECTIVE ACTION
A. Motor fails to start upon initial installation	Motor is miswired.	Rewire motor according to wiring schematic provided.
	Motor damaged and rotor is striking stator.	May be able to reassemble; otherwise, motor should be replaced.
	Fan guard bent and contacting fan.	Replace fan guard.
B. Motor has been running, then fails to start.	Fuse or circuit breaker tripped.	Replace fuse or reset the breaker.
	Stator is shorted or went to ground. Motor will make a humming noise and the circuit breaker or fuse will trip.	Disassemble motor and inspect windings and internal connections. A blown stator will show a burn mark. Motor must be replaced or the stator rewound.
	Motor overloaded or load jammed.	Inspect to see that the load is free. Verify amp draw of motor versus nameplate rating.

	Capacitor (on single phase motor) may have failed.	First discharge capacitor. To check capacitor, set volt-ohm meter to RX100 scale and touch its probes to capacitor terminals. If capacitor is OK, needle will jump to zero ohms, and drift back to high. Steady zero ohms indicates a short circuit; steady high ohms indicates an open circuit.
	Starting switch has failed.	Disassemble motor and inspect both the centrifugal and stationary switches. The weights of the centrifugal switch should move in and out freely. Make sure that the switch is not loose on the shaft. Inspect contacts and connections on the stationary switch. Replace switch if the contacts are burned or pitted.
C. Motor runs but dies down.	Voltage drop.	If voltage is less than 10% of the motor's rating contact power company or check if some other equipment is taking power away from the motor.
	Load increased.	Verify the load has not changed. Verify equipment hasn't got tighter. If fan application verify the air flow hasn't changed.
D. Motor takes too long to accelerate.	Defective capacitor	Test capacitor per previous instructions.
	Faulty stationary switch.	Inspect switch contacts and connections. Verify that switch reeds have some spring in them.
	Bad bearings.	Noisy or rough feeling bearings should be replaced.

	Voltage too low. Make sure that the voltage is within 10% of the motor's name.	plate rating. If not, contact power company or check if some other equipment is taking power away from the motor.
E. Motor overload protector continually trips.	Load too high.	Verify that the load is not jammed. If motor is a replacement, verify that the rating is the same as the old motor. If previous motor was a special design, a stock motor may not be able to duplicate the performance. Remove the load from the motor and inspect the amp draw of the motor unloaded. It should be less than the full load rating stamped on the nameplate.
	Ambient temperature too high.	Verify that the motor is getting enough air for proper cooling. Most motors are designed to run in an ambient temperature of less than 40°C. (Note: A properly operating motor may be hot to the touch.)
	Protector may be defective.	Replace the motor's protector with a new one of the same rating.
	Winding shorted or grounded.	Inspect stator for defects, or loose or cut wires that may cause it to go to ground.
F. Low flow and/or pressure.	Blockage in piping	Check valves and piping.
	Backwards motor rotation	Check rotation and electrical phase connections.
	Flow meter and/or gauge failure. Damaged or blocked stage assemblies.	Check and calibrate instruments and gauges. Check and replace stage assemblies as required.
G. Motor stalled	Power failure or trip.	Verify proper power and voltage connections. Check motor overload mechanisms. I.e. Fuses and /or circuit breakers.

		Check fuses.
	Jam or block in impeller and stage assemblies.	Check and replace stage assemblies as required.
	Damaged motor.	Replace motor.
H. Leak	Leaky connection.	Check couplings.
	Mechanical seal failure.	Inspect and/or replace mechanical seal.
	Damaged o-ring.	Inspect o-rings.
I. Excessive noise	Excessive flow rate.	Lower flow rate or apply backpressure to pump.
	Insufficient feed water.	Check feed pressure and inspect wet end assembly.
	Motor bearing failure.	Check motor bearings and/or replace motor.

ENERGY RECOVERY, INC. SAMPLE OPERATING LOG

NOTE: Daily data must be collected and maintained to support any warranty claims. Initial data must be submitted within 24 hours of startup.

Fax: +1 510 483 7371 Attn: Warranty Administration Department

Model of PX Booster Pump _____

Serial Number(s) _____

Units (please circle one): psi/gpm bar/m^3/hr

Date	Total Hours	HP Inlet Pressure	HP Outlet Pressure	HP Flow	Motor Bearings Lubricated?

9.0 ERI FIELD COMMISSIONING

The Technical Services staff of ERI offers commissioning service for all our related products whether it is in a field installation or at a RO system manufacturer's location. Although commissioning is not a requirement, some customers might feel more comfortable with the offered service. Rates can be quoted upon request.

Should a problem develop with any ERI product, our Technical Services group is prepared to handle customers' concerns whether the location is domestic or overseas. Service rates are available upon request.

Energy Recovery, Inc.
1908 Doolittle Drive
San Leandro, CA 94577 USA
Tel: +1 510 483 7370 Fax: +1 510 483 7371
Email: sales@energy-recovery.com Web: www.energy-recovery.com

10.0 WARRANTY AND LIABILITY

Energy Recovery, Inc. (ERI) warrants that its PX Booster Pump(s) will not fail or malfunction as a result of defects in materials, workmanship, or design for a period of twelve (12) months from date of shipment.

Application

This Warranty (i) extends to the original purchaser only, (ii) covers a PX Booster Pump that is installed and put to use at the intended site and under the intended conditions (unless written approval for installation at some other location is obtained from ERI), and (iii) shall apply only if ERI's written Installation, Operation, and Maintenance instructions and Buyer's Responsibilities have been complied with in full throughout the warranty period. This Warranty shall not apply to damage or wear to a PX Booster Pump caused by unprotected storage, abnormal operating conditions, or to accidents, abuse, misuse, or improper disassembly, alterations, or repair.

Limitations

This Warranty is sole and exclusive and in lieu of any rights or remedies otherwise available at law or in equity. In no event shall ERI be responsible or held liable for any indirect, special incidental, or consequential type damages including, by way of example but not by way of limitation, loss of profit, loss of use, loss of product or feedstock, business interruption, or damage caused by the installation or use of ERI's products, however caused, including the fault or negligence of ERI. ERI's aggregate liability shall not exceed an amount equal to the Purchase Price.

Remedy

If a PX Booster Pump covered under this Warranty becomes inoperative, ERI will, at its option, either promptly repair or replace the faulty unit. Repair or replacement parts will be supplied Ex-works, San Leandro, California without charge to Buyer except that Buyer shall be responsible for applicable taxes, duties, and installation costs. ERI shall evaluate and repair or replace the inoperative PX Booster Pump according to the terms of its Return Material Agreement.

Buyer's Responsibilities

The Buyer shall comply with ERI's written Installation, Operation, and Maintenance Manuals and ERI's other manuals, instructions, and recommendations. In addition, Buyer shall be responsible for performance or forbearance as follows:

1. Buyer shall maintain complete and accurate operating records for the PX Booster Pump. These records must show that the PX Booster Pump is operated consistently within the maximum flow and pressure limits listed in ERI's Installation, Operation, and Maintenance Manuals as updated from time to time on ERI's website: http://www.energy-recovery.com. Buyer will record all of the operating parameters required by ERI at least once per day. Buyer shall make available to ERI all PX Booster Pump and plant operating records at any time during normal working hours.

2. The maximum operating flow through the PX Booster Pump must not be less than the minimum rated capacity.

3. Maximum operating pressure must not exceed 1,200 psi [83 bar].

4. All piping shall be cleaned and flushed with water so that all construction debris is removed from the system before installing or operating the PX Booster Pump.

5. In preparation for extended plant shutdowns, PX Booster Pumps must be flushed with permeate and a biocide.

11.0 REVISION LOG

Table 11-1 - Revision Log

Revision	Description	Date	Approval
-	Initial Release	10-25-01	JPM
A	Update photos and as builts.	05-03-02	JPM
B	Update procedures and photos. Add seal compression and shim instructions.	11-21-03	RLS
1	Update spare parts numbers, seal change procedure, add RMA form, update drawings	5-13-04	RLS
2	Trademarks, revised pump curves, added motor bearing service, added warranty	1-24-05	RLS
3	Revised warranty, pump curves	8/11/05	RLS

12.0 DRAWINGS AND DATA

1. PX Booster Pump Assembly Drawings, Overall Dimensions and Labeling Diagrams, Shipping Configuration Drawings
2. PX Booster Pump Characteristic (Pump) Curves

NOTES:
1. COAT STEPPED COUPLING BORES AND ALL THREADED FASTENERS WITH ANTI-SIEZE COMPOUND AT ASSEMBLY.
2. USE REQUIRED QTY OF SPACER WASHERS TO ACHIEVE SPACING OUTLINED IN THE OPERATIONS AND MAINTANCE MANUAL.
3. ENERGY RECOVERY INC., RESERVES THE RIGHT TO MAKE CHANGES AT ANY TIME WITHOUT NOTICE.

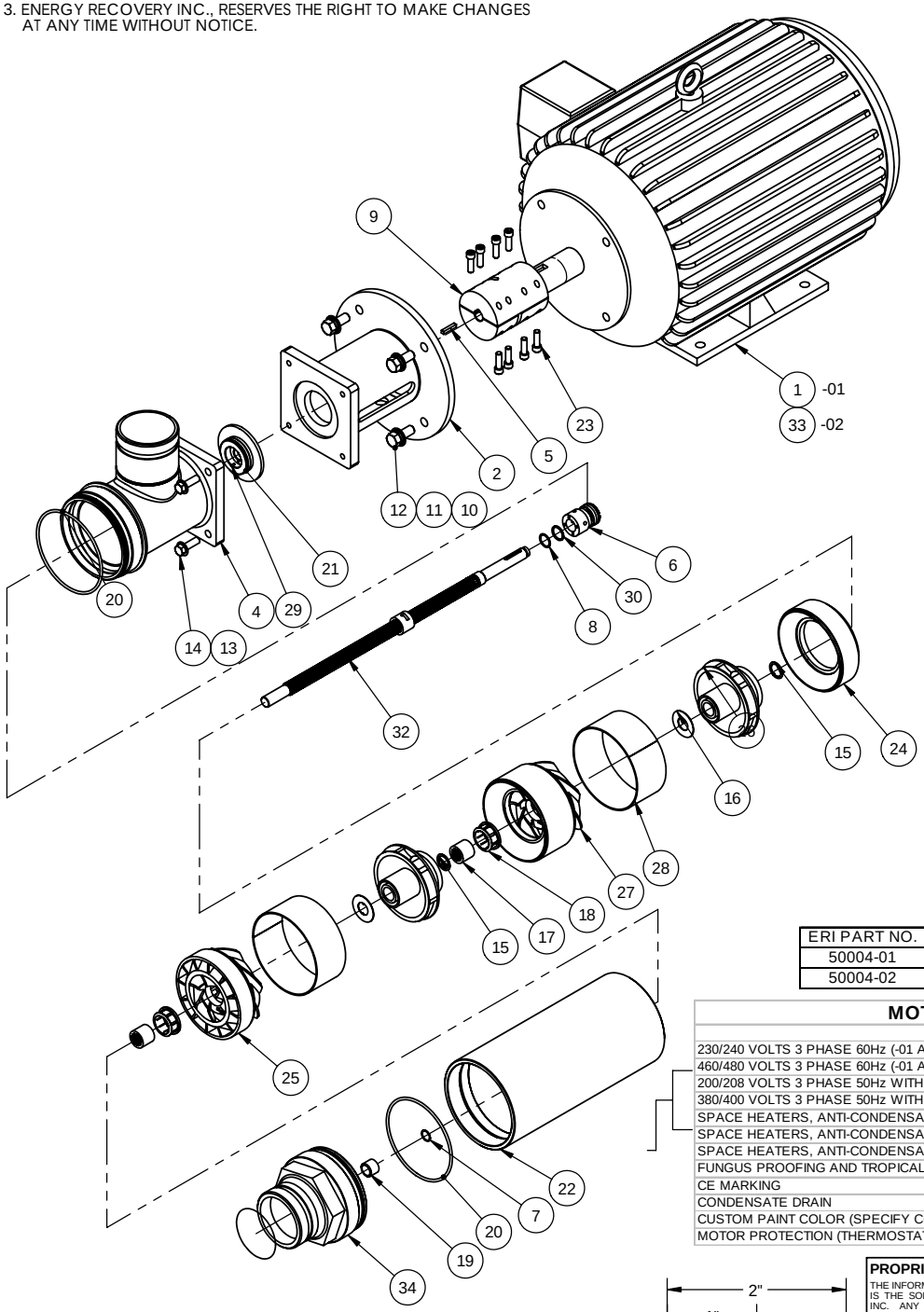

BILL OF MATERIALS

ITEM NO.	-01/QTY.	-02/QTY.	PART NO.	DESCRIPTION	MATERIAL
1	1	-	51039-01	MOTOR 15 H.P., 254TC	---
2	1	1	51000-01	HOUSING, BELL, BOOSTER PUMP	ALUM
3	1	1	51008-01	PLATE, SEAL	AL6XN
4	1	1	51005-01	INLET, BOOSTER PUMP	AL6XN
5	1	1	51041-01	3/16" SQ X 1" LG KEY	316 SS
6	1	1	10123-01	SEAL, SHAFT, MECHANICAL	316SS
7	1	1	10061-01	RING, RETAINING	C-276
8	1	1	10066-01	RING, RETAINING	C-276
9	1	1	51030-01	COUPLING, STEPPED, 1 5/8" X 5/8"	TITANIUM
10	4	4	10068-01	WASHER, FLAT, 1/2", TYPE A	18-8 SS
11	4	4	10044-01	WASHER, SPLIT LOCK	316 SS
12	4	4	10067-01	HHB, 1/2-13 X 1 1/4" LG	316 SS
13	4	4	10038-01	WASHER, FLAT, 3/8"	316 SS
14	4	4	10070-01	HHB, 3/8-16 X 1 1/4" LG	316 SS
15	5	5	51027-01	WASHER, SPACER	AL6XN
16	2	2	51026-01	WASHER, THRUST	AL6XN
17	2	2	51025-01	JOURNAL, BEARING	AL6XN
18	2	2	10141-01	BUSHING, RUBBER	RUBBER
19	1	1	51003-01	BUSHING, SLEEVE, .625 ID	RULON
20	2	2	10163-01	O-RING, -249	EPDM
21	1	1	10160-01	O-RING, -225	EPDM
22	1	1	51011-05	SHELL, BOOSTER PUMP	AL6XN
23	8	8	10059-01	SHCS, 5/16-24 X 1" LG	316 SS
24	1	1	51033-01	DIFFUSER, INLET, 240 SERIES	PVC
25	1	1	10144-01	PLATE, DIFFUSER, 240 SERIES	NORYL
26	2	2	10148-01	IMPELLER, PLATE 240 SERIES	NORYL
27	1	1	10140-01	BOWL, DIFFUSER, 240 SERIES	NORYL
28	2	2	51031-01	SLEEVE, BOWL	AL6XN
29	1	1	10117-01	DOWEL, 3/32" DIA X 1/4" LG	ACETAL
30	1	1	10122-01	SPACER, SEAL	PVC
31	-	1	51037-01	MOTOR 15 H.P., 254T, BOLT ON C-FLANGE	---
32	1	-	51055-01	ASSY, SHAFT, ALL-SPLINE, 2402 PUMP	AL6XN
33	-	1	51055-01	ASSY, SHAFT, ALL-SPLINE, 2402 PUMP	AL6XN
34	1	-	51002	NOZZLE, OUTLET, BOOSTER PUMP	AL6XN
35	-	1	51001	NOZZLE, OUTLET, BOOSTER PUMP	AL6XN

MECHANICAL SEAL KIT, ERI P/N 20004-01
HP-2402, 2-STAGE REBUILD KIT, ERI P/N 20009-01
HP-2402, O-RING KIT, ERI P/N 20009-02
BOOSTER PUMP TOOL KIT, ERI P/N 20003-01

ERI PART NO.	DESCRIPTION
50004-01	OPTIONAL POWER
50004-02	575/600 VOLTS 3 PHASE 60Hz ONLY

MOTOR OPTIONS

DESCRIPTION
230/240 VOLTS 3 PHASE 60Hz (-01 ASSEMBLY ONLY)
460/480 VOLTS 3 PHASE 60Hz (-01 ASSEMBLY ONLY)
200/208 VOLTS 3 PHASE 50Hz WITH NEW NAME PLATE (-01 ASSEMBLY ONLY)
380/400 VOLTS 3 PHASE 50Hz WITH NEW NAME PLATE (-01 ASSEMBLY ONLY)
SPACE HEATERS, ANTI-CONDENSATION 115 VAC (254-316T NEMA FRAME SIZE)
SPACE HEATERS, ANTI-CONDENSATION 230/240 VAC (254-316T NEMA FRAME SIZE)
SPACE HEATERS, ANTI-CONDENSATION 460/480 VAC (254-316T NEMA FRAME SIZE)
FUNGUS PROOFING AND TROPICALIZATION (254-363T NEMA FRAME SIZE)
CE MARKING
CONDENSATE DRAIN
CUSTOM PAINT COLOR (SPECIFY COLOR ON PURCHASE ORDER)
MOTOR PROTECTION (THERMOSTAT ON WINDINGS)

2"
1"
REFERENCE SCALE

PRODUCT
DRAWING STATUS

-01 SHOWN

INCH

UNLESS OTHERWISE SPECIFIED:
TOLERANCES:
FRACTIONAL: ± 1/32"
ANGULAR: MACH ±.5°
BEND ±1°
TWO PLACE DECIMAL: ±.01"
THREE PLACE DECIMAL: ±.005"
FOUR PLACE DECIMAL: ±.0002"
SURFACE FINISH:
ON PART 125 RMS
ON O-RING SURFACES 32 RMS
DIMENSIONING AND TOLERANCING PER ANSI Y14.5M (LATEST)
FINISH:
MATERIAL:
SHOWN

REV.	ECN NO.	DESCRIPTION	BY	DATE
1	04-066	CHANGE TO ALL SPLINE SHAFT	RAC	09/01/2004

REVISIONS

ENERGY RECOVERY INC.
1908 Doolittle Drive, San Leandro, CA 94577
Ph. (510)483-7370 / Fax: (510)483-7371
www.energy-recovery.com

DRAWN	RAC	05/12/2003
CHECKED	TLS	05/28/2003
ENG APPR.	RLS	05/28/2003

THIRD ANGLE PROJECTION

TITLE: ASSY, PUMP, BOOSTER, HP-2402

SIZE	DWG. NO.	REV
C	50004	1

SCALE: 1:4.5 | WEIGHT: | SHEET 1 OF 3

NOTES:

1. MOTORS ARE CUSTOMIZED TO EMPLOY A SPECIAL THRUST BEARING. CONTACT ENERGY RECOVERY INC. FOR REPLACEMENT OR REPAIR.
2. MOTOR:
   -01 = 15 H.P. 254TC FRAME
   -02 = 15 H.P. 254T WITH BOLT ON C-FLANGE KIT
3. ENERGY RECOVERY INC. RESERVES TO RIGHT TO MAKE SPECIFICATION OR DIMENSION CHANGES WITHOUT NOTICE.
4. LABEL LOCATIONS ARE APPROX AS SHOWN.

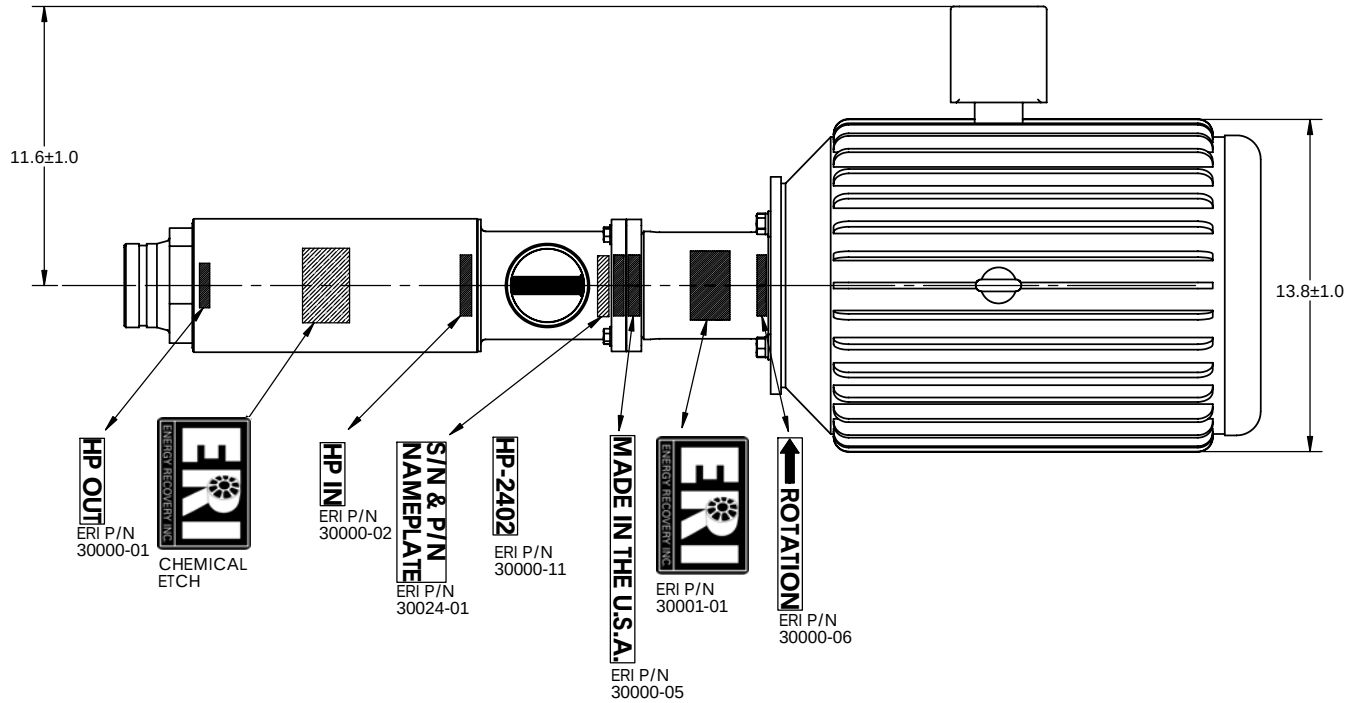

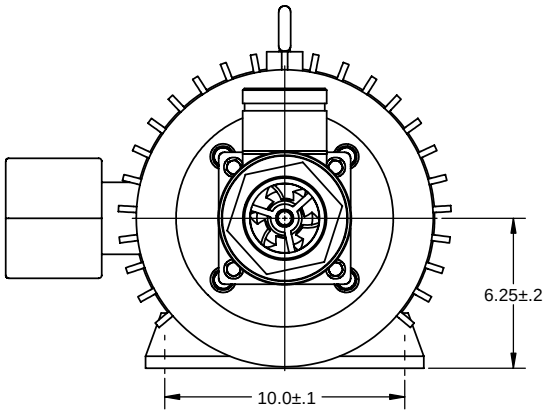

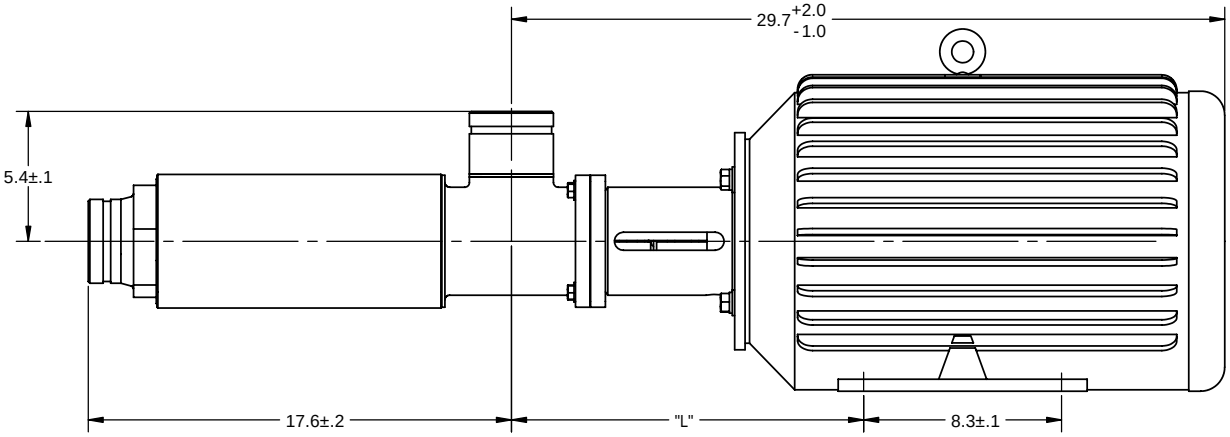

ERI PART NO.	"L"
50004-01	14.7 +/- .1
50004-02	14.2 +/- .1

SEE SHEET 1 FOR REVISIONS

OVERALL DIMENSIONS
LABEL LOCATIONS

INCH

SPECIFICATIONS:

MODEL: HP-2402
OPERATING FLOW RANGE: 80-300 GPM / 18-68 m3/hr
H.P. : 15
FULL LOAD 460VAC (AMPS): 17

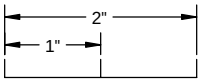

REFERENCE SCALE

PRODUCT

DRAWING STATUS

ENERGY RECOVERY INC.
1908 Doolittle Drive, San Leandro, CA 94577
Ph. (510)483-7370 / Fax: (510)483-7371
www.energy-recovery.com

DRAWN	RAC	05/12/2003
CHECKED	TLS	05/28/2003
ENG APPR.	RLS	05/28/2003

THIRD ANGLE PROJECTION

TITLE: ASSY, PUMP, BOOSTER, HP-2402

SIZE	DWG. NO.	REV
C	50004	1

SCALE: 1:4 | WEIGHT: | SHEET 2 OF 3

BILL OF MATERIALS				
ITEM NO.	shipping/QTY.	PART NO.	DESCRIPTION	MATERIAL
29	2	10011-01	CAP, PROTECTIVE	PLASTIC
32	1	10010-01	CRATE, SHIPPING, 54" X 16 1/2" X 14"	HT/KD WOOD

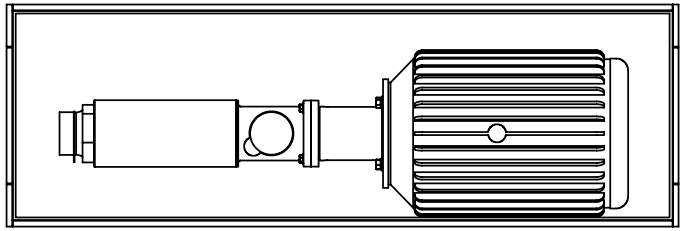

COVER NOT SHOWN
IF REQUIRED REMOVE ELECTRICAL JUNCTION BOX PRIOR TO PLACING IN CRATE
ATTACH BOOSTER PUMP ASSEMBLY TO BOTTOM OF CRATE USING HEX BOLT/WASHER
SHORE PUMP TO KEEP FROM SHIFTING OR MOVEMENT INSIDE CRATE DURING TRANSIT

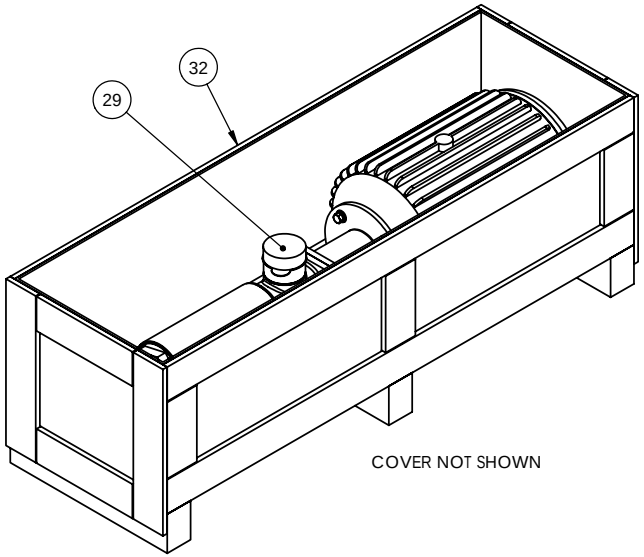

COVER NOT SHOWN

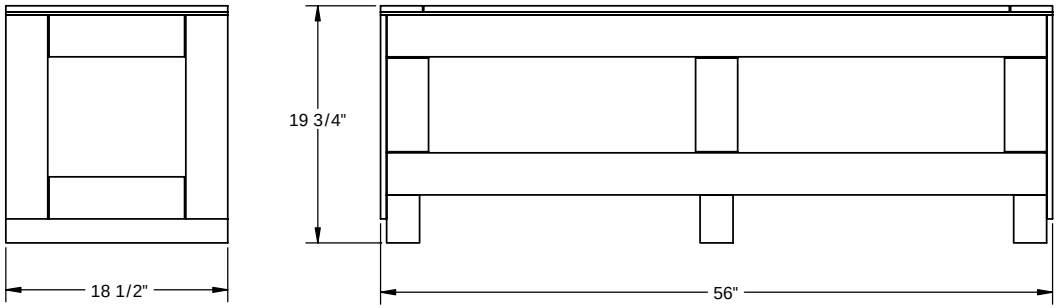

SHIPPING CONFIGURATION

SHIPPING WEIGHT:380 LBS / 172.3 Kgs

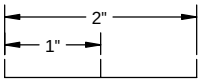

REFERENCE SCALE

INCH

SEE SHEET 1 FOR REVISIONS

ENERGY RECOVERY INC.
1908 Doolittle Drive, San Leandro, CA 94577
Ph. (510)483-7370 / Fax: (510)483-7371
www.energy-recovery.com

PRODUCT
DRAWING STATUS

DRAWN	RAC	05/12/2003
CHECKED	TLS	05/28/2003
ENG APPR.	RLS	05/28/2003

THIRD ANGLE PROJECTION

TITLE: ASSY, PUMP, BOOSTER, HP-2402

SIZE	DWG. NO.	REV
C	50004	1

SCALE: 1:8 | WEIGHT: | SHEET 3 OF 3

NOTES:
1. COAT STEPPED COUPLING BORES AND ALL THREADED FASTENERS WITH ANTI-SIEZE COMPOUND AT ASSEMBLY.
2. USE REQUIRED QTY OF SPACER WASHERS TO ACHIEVE SPACING OUTLINED IN THE OPERATIONS AND MAINTANCE MANUAL.
3. ENERGY RECOVERY INC., RESERVES THE RIGHT TO MAKE CHANGES AT ANY TIME WITHOUT NOTICE.

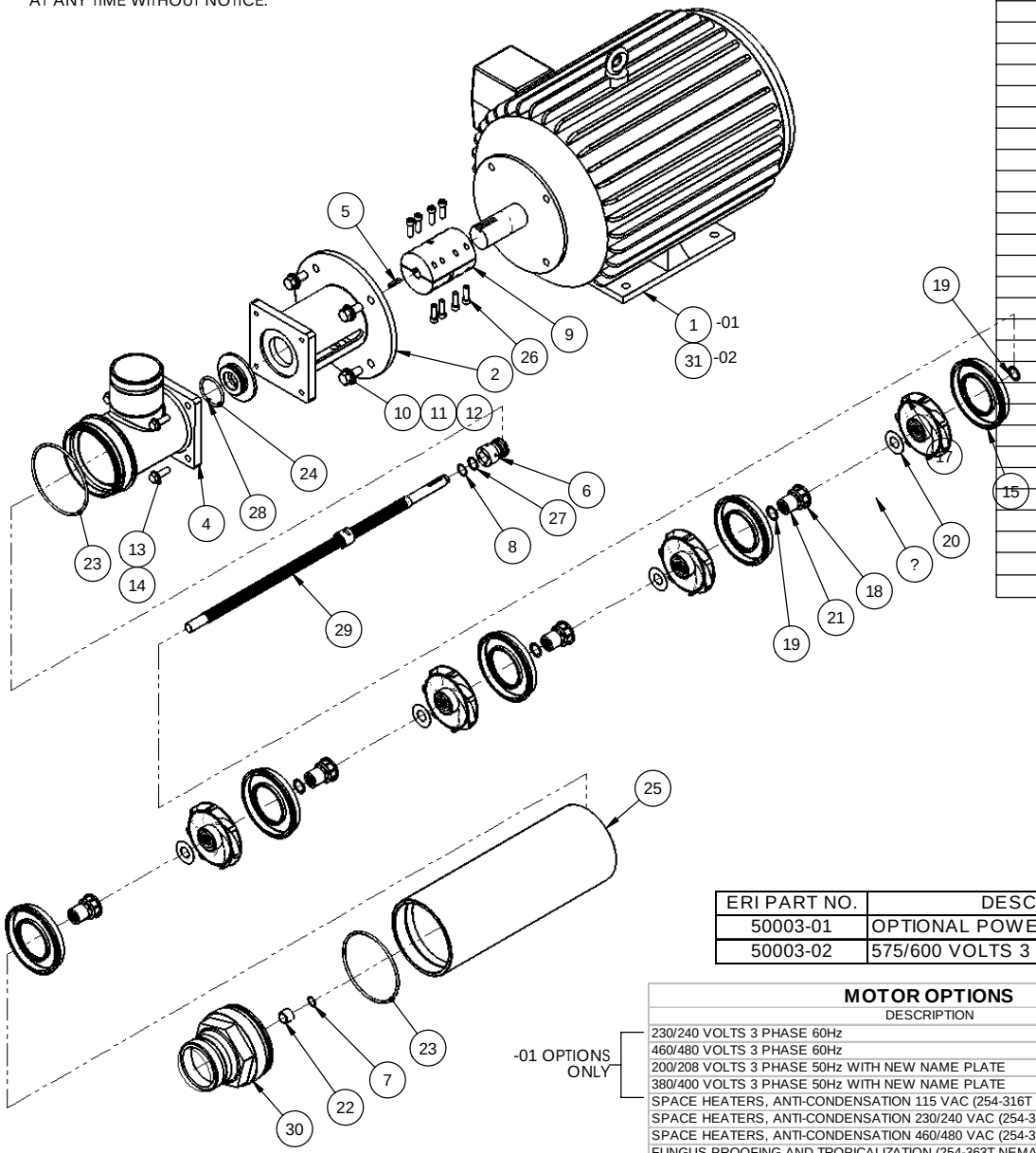

BILL OF MATERIALS

ITEM NO.	-01/QTY.	-02/QTY.	PART NO.	DESCRIPTION	MATERIAL
1	1	-	51039-01	MOTOR 15 H.P., 254TC	---
2	1	1	51000-01	HOUSING, BELL, BOOSTER PUMP	ALUM
3	1	1	51008-01	PLATE, SEAL	AL6XN
4	1	1	51005-01	INLET, BOOSTER PUMP	AL6XN
5	1	1	51041-01	3/16" SQ X 1" LG KEY	316 SS
6	1	1	10123-01	SEAL, SHAFT, MECHANICAL	316SS
7	1	1	10061-01	RING, RETAINING	C-276
8	1	1	10066-01	RING, RETAINING	C-276
9	1	1	51030-01	COUPLING, STEPPED, 1 5/8" X 5/8"	TITANIUM
10	4	4	10068-01	WASHER, FLAT, 1/2", TYPE A	18-8 SS
11	4	4	10044-01	WASHER, SPLIT LOCK	316 SS
12	4	4	10067-01	HHB, 1/2-13 X 1 1/4" LG	316 SS
13	4	4	10038-01	WASHER, FLAT, 3/8"	316 SS
14	4	4	10070-01	HHB, 3/8-16 X 1 1/4" LG	316 SS
15	5	5	10143-01	PLATE, DIFFUSER, 120 SERIES	NORYL/AL6XN
16	-	4	10139-01	BOWL, DIFFUSER, 120 SERIES	NORYL
17	4	4	10147-01	IMPELLER, PLATE, SERIES 120	NORYL
18	4	4	10141-01	BUSHING, RUBBER	RUBBER
19	8	8	51027-01	WASHER, SPACER	AL6XN
20	4	4	51026-01	WASHER, THRUST	AL6XN
21	4	4	51025-01	JOURNAL, BEARING	AL6XN
22	1	1	51003-01	BUSHING, SLEEVE, .625 ID	RULON
23	2	2	10163-01	O-RING, -249	EPDM
24	1	1	10160-01	O-RING, -225	EPDM
25	1	1	51011-04	SHELL, BOOSTER PUMP	AL6XN
26	8	8	10059-01	SHCS, 5/16-24 X 1" LG	316 SS
27	1	1	10122-01	SPACER, SEAL	PVC
28	1	1	10117-01	DOWEL, 3/32" DIA X 1/4" LG	ACETAL
29	1	1	51054-01	ASSY, SHAFT, ALL-SPLINE, 1254 PUMP	AL6XN
30	1	1	51002	NOZZLE, OUTLET, BOOSTER PUMP	AL6XN
31	-	1	51037-01	MOTOR 15 H.P., 254T, BOLT ON C-FLANGE	---

MECHANICAL SEAL KIT, ERI P/N 20004-01
HP-1254, 4-STAGE REBUILD KIT, ERI P/N 20008-01
HP-1254, O-RING KIT, ERI P/N 20008-02
BOOSTER PUMP TOOL KIT, ERI P/N 20003-01

ERI PART NO.	DESCRIPTION
50003-01	OPTIONAL POWER
50003-02	575/600 VOLTS 3 PHASE 60Hz ONLY

MOTOR OPTIONS

	DESCRIPTION
-01 OPTIONS ONLY	230/240 VOLTS 3 PHASE 60Hz
	460/480 VOLTS 3 PHASE 60Hz
	200/208 VOLTS 3 PHASE 50Hz WITH NEW NAME PLATE
	380/400 VOLTS 3 PHASE 50Hz WITH NEW NAME PLATE
	SPACE HEATERS, ANTI-CONDENSATION 115 VAC (254-316T NEMA FRAME SIZE)
	SPACE HEATERS, ANTI-CONDENSATION 230/240 VAC (254-316T NEMA FRAME SIZE)
	SPACE HEATERS, ANTI-CONDENSATION 460/480 VAC (254-316T NEMA FRAME SIZE)
	FUNGUS PROOFING AND TROPICALIZATION (254-363T NEMA FRAME SIZE)
	CE MARKING
	CONDENSATE DRAIN
	CUSTOM PAINT COLOR (SPECIFY COLOR ON PURCHASE ORDER)
	MOTOR PROTECTION (THERMOSTAT ON WINDINGS)

2"
1"
REFERENCE SCALE

PRODUCT
DRAWING STATUS

-01 SHOWN

INCH

UNLESS OTHERWISE SPECIFIED:
TOLERANCES:
FRACTIONAL: ± 1/32"
ANGULAR: MACH ±.5°
BEND ±1°
TWO PLACE DECIMAL: ±.01"
THREE PLACE DECIMAL: ±.005"
FOUR PLACE DECIMAL: ±.0002"
SURFACE FINISH:
ON PART 125 RMS
ON O-RING SURFACES 32 RMS
DIMENSIONING AND TOLERANCING PER ANSI Y14.5M (LATEST)
FINISH:
MATERIAL:
SHOWN

REV.	ECN NO.	DESCRIPTION	BY	DATE
1	04-065	CHANGE TO ALL SPLINE SHAFT	RAC	09/01/2004

REVISIONS

ENERGY RECOVERY INC.
1908 Doolittle Drive, San Leandro, CA 94577
Ph. (510)483-7370 / Fax: (510)483-7371
www.energy-recovery.com

DRAWN	RAC	05/12/2003
CHECKED	TLS	05/28/2003
ENG APPR.	RLS	05/28/2003

THIRD ANGLE PROJECTION

TITLE: ASSY, PUMP, BOOSTER, HP-1254

SIZE	DWG. NO.	REV
C	50003	1

SCALE: 1:5.25 WEIGHT: SHEET 1 OF 3

NOTES:

1. MOTORS ARE CUSTOMIZED TO EMPLOY A SPECIAL THRUST BEARING. CONTACT ENERGY RECOVERY INC. FOR REPLACEMENT OR REPAIR.
2. MOTOR:
   -01 = 15 H.P. 254TC FRAME
   -02 = 15 H.P. 254T WITH BOLT ON C-FLANGE
3. ENERGY RECOVERY INC. RESERVES TO RIGHT TO MAKE SPECIFICATION OR DIMENSION CHANGES WITHOUT NOTICE.
4. LABEL LOCATIONS ARE APPROX AS SHOWN.

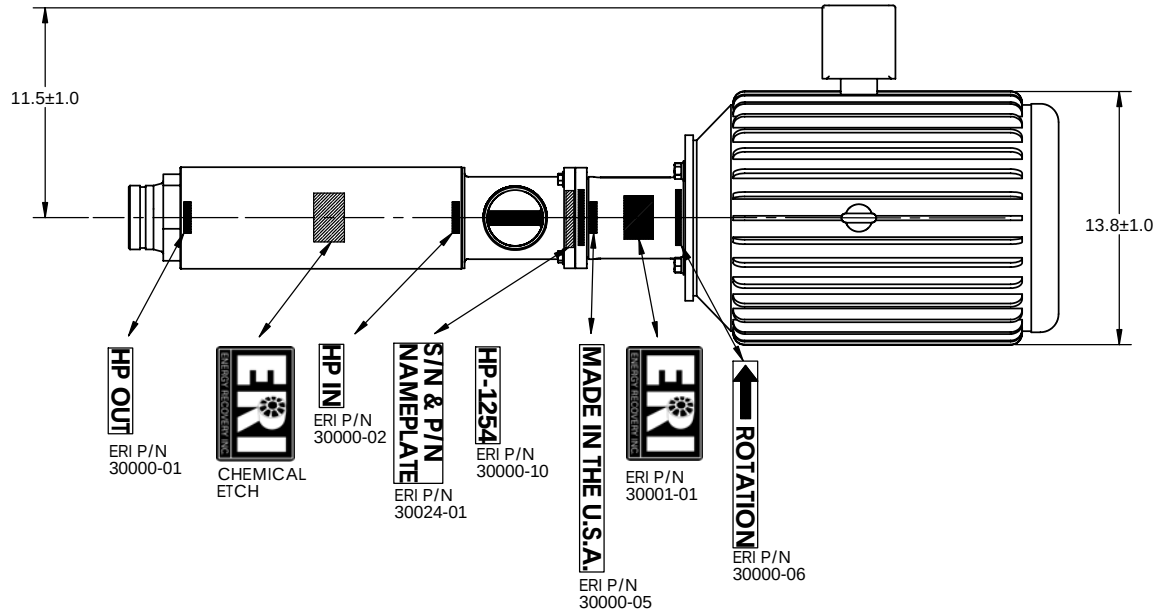

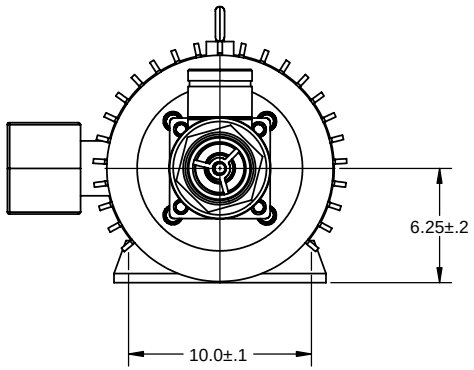

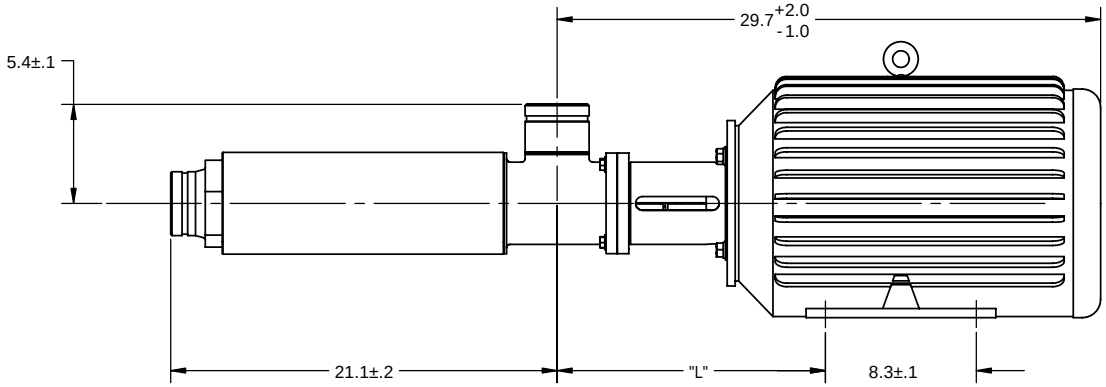

ERI PART NO.	"L"
50003-01	14.7 +/- .1
50003-02	14.2 +/- .1

SEE SHEET 1 FOR REVISIONS

OVERALL DIMENSIONS
LABEL LOCATIONS

INCH

SPECIFICATIONS:

MODEL: HP-1254
OPERATING FLOW RANGE: 40-190 GPM / 9-43 m3/hr
H.P. : 15
FULL LOAD 460VAC (AMPS): 17

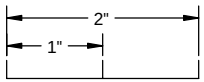

REFERENCE SCALE

PROPRIETARY AND CONFIDENTIAL

THE INFORMATION CONTAINED IN THIS DRAWING IS THE SOLE PROPERTY OF ENERGY RECOVERY INC. ANY REPRODUCTION IN PART OR AS A WHOLE WITHOUT THE WRITTEN PERMISSION OF ENERGY RECOVERY INC. IS PROHIBITED.

PRODUCT

DRAWING STATUS

ENERGY RECOVERY INC.
1908 Doolittle Drive, San Leandro, CA 94577
Ph. (510)483-7370 / Fax: (510)483-7371
www.energy-recovery.com

DRAWN	RAC	05/12/2003
CHECKED	TLS	05/28/2003
ENG APPR.	RLS	05/28/2003

THIRD ANGLE PROJECTION

TITLE: ASSY, PUMP, BOOSTER, HP-1254

SIZE	DWG. NO.	REV
C	50003	1

SCALE: 1:5.25 WEIGHT: SHEET 2 OF 3

BILL OF MATERIALS				
ITEM NO.	shipping/QTY.	PART NO.	DESCRIPTION	MATERIAL
27	2	10011-01	CAP, PROTECTIVE	PLASTIC
30	1	10010-01	CRATE, SHIPPING, 54" X 16 1/2" X 14"	HT/KD WOOD

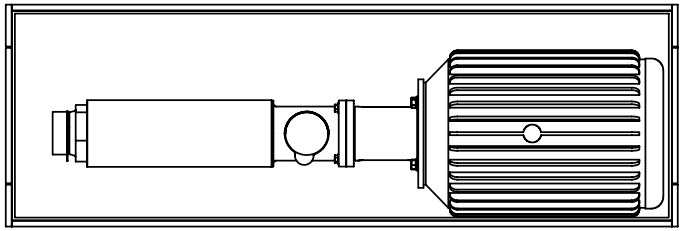

COVER NOT SHOWN
IF REQUIRED REMOVE ELECTRICAL JUNCTION BOX PRIOR TO PLACING IN CRATE
ATTACH BOOSTER PUMP ASSEMBLY TO BOTTOM OF CRATE USING HEX BOLT/WASHER
SHORE PUMP TO KEEP FROM SHIFTING OR MOVEMENT INSIDE CRATE DURING TRANSIT

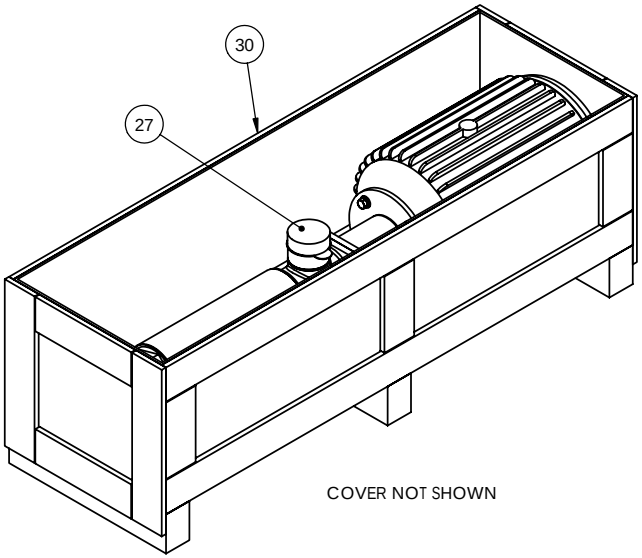

COVER NOT SHOWN

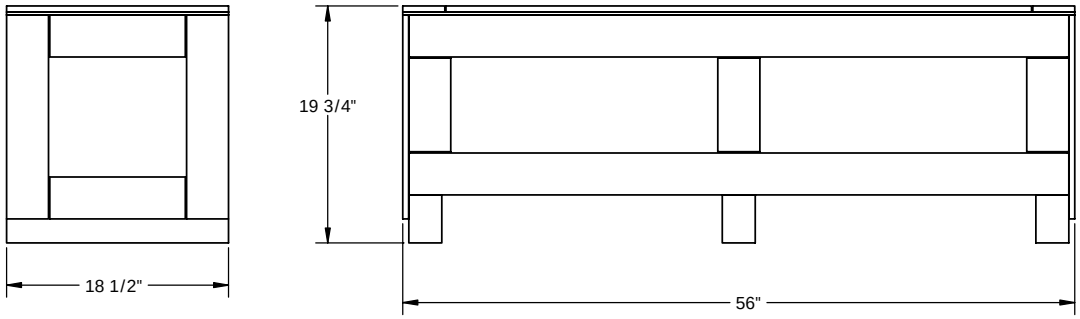

SHIPPING WEIGHT: 380 LBS / 172.5 Kgs

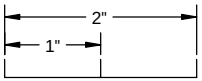

REFERENCE SCALE

SEE SHEET 1 FOR REVISIONS

INCH

ENERGY RECOVERY INC.
1908 Doolittle Drive, San Leandro, CA 94577
Ph. (510)483-7370 / Fax: (510)483-7371
www.energy-recovery.com

PRODUCT
DRAWING STATUS

DRAWN	RAC	05/12/2003
CHECKED	TLS	05/28/2003
ENG APPR.	RLS	05/28/2003

THIRD ANGLE PROJECTION

TITLE: ASSY, PUMP, BOOSTER, HP-1254

SIZE	DWG. NO.	REV
C	50003	1

SCALE: 1:8 | WEIGHT: | SHEET 3 OF 3

NOTES:
1. COAT STEPPED COUPLING BORES AND ALL THREADED FASTENERS WITH ANTI-SIEZE COMPOUND AT ASSEMBLY.
2. USE REQUIRED QTY OF SPACER WASHERS TO ACHIEVE SPACING OUTLINED IN THE OPERATIONS AND MAINTANCE MANUAL.
3. ENERGY RECOVERY INC., RESERVES THE RIGHT TO MAKE CHANGES AT ANY TIME WITHOUT NOTICE.

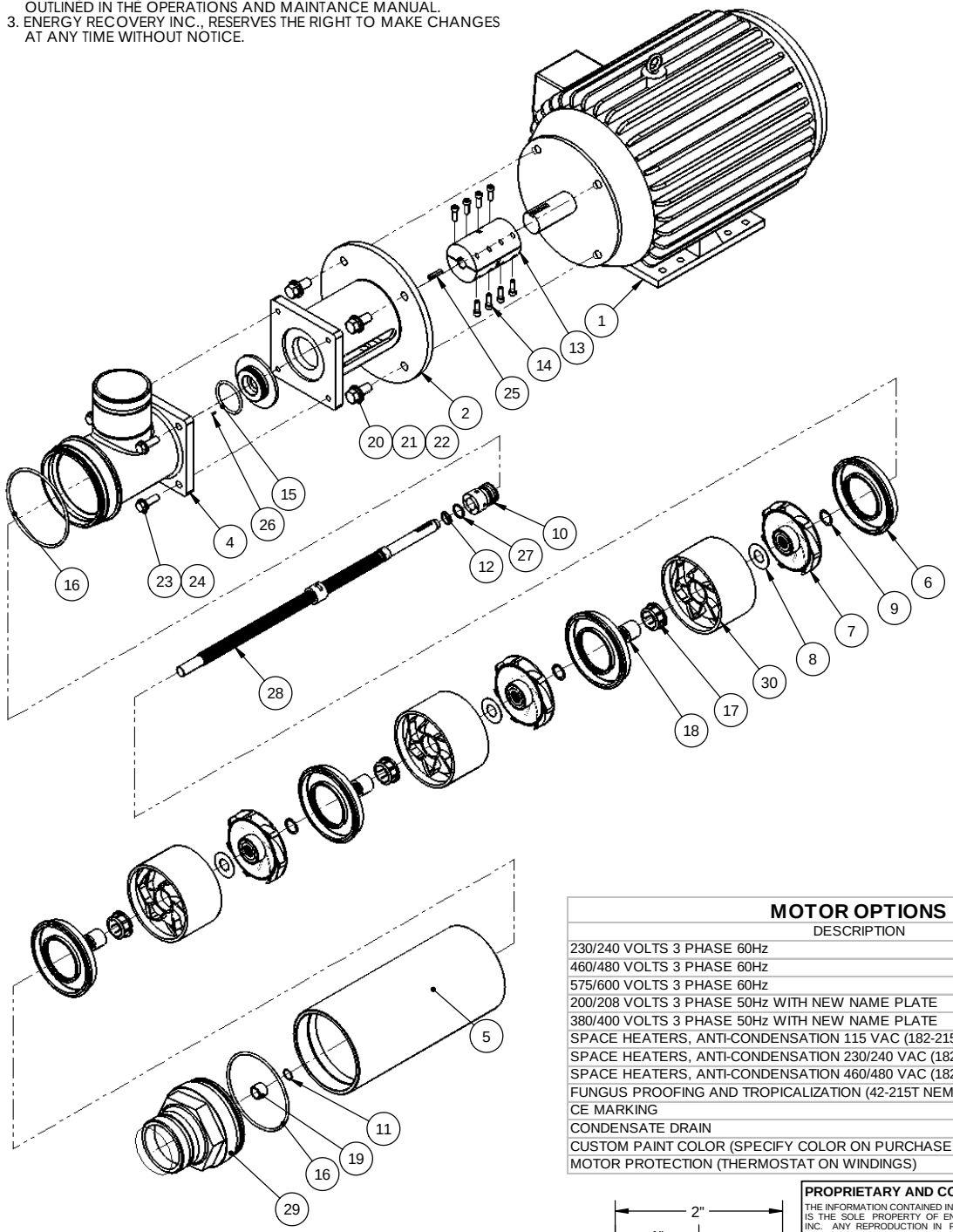

BILL OF MATERIALS

ITEM NO.	-01/QTY.	PART NO.	DESCRIPTION	MATERIAL
1	1	51036-01	MOTOR 10 H.P., 215T, BOLT ON C-FLANGE	---
2	1	51000-01	HOUSING, BELL, BOOSTER PUMP	ALUM
3	1	51008-01	PLATE, SEAL	AL6XN
4	1	51005-01	INLET, BOOSTER PUMP	AL6XN
5	1	51011-03	SHELL, BOOSTER PUMP	AL6XN
6	4	10143-01	PLATE, DIFFUSER, 120 SERIES	NORYL/AL6XN
7	3	10147-01	IMPELLER, PLATE, SERIES 120	NORYL
8	3	51026-01	WASHER, THRUST	AL6XN
9	6	51027-01	WASHER, SPACER	AL6XN
10	1	10123-01	SEAL, SHAFT, MECHANICAL	316SS
11	1	10061-01	RING, RETAINING	C-276
12	1	10066-01	RING, RETAINING	C-276
13	1	51029-01	COUPLING, STEPPED, 1 3/8" X 5/8"	TITANIUM
14	8	10054-01	SHCS, 1/4-28 X 3/4" LG, CLASS 3A	316 SS
15	1	10160-01	O-RING, -225	EPDM
16	2	10163-01	O-RING, -249	EPDM
17	3	10141-01	BUSHING, RUBBER	RUBBER
18	3	51025-01	JOURNAL, BEARING	AL6XN
19	1	51003-01	BUSHING, SLEEVE, .625 ID	RULON
20	4	10068-01	WASHER, FLAT, 1/2", TYPE A	18-8 SS
21	4	10044-01	WASHER, SPLIT LOCK	316 SS
22	4	10067-01	HHB, 1/2-13 X 1 1/4" LG	316 SS
23	4	10038-01	WASHER, FLAT, 3/8"	316 SS
24	4	10070-01	HHB, 3/8-16 X 1 1/4" LG	316 SS
25	1	51041-01	3/16" SQ X 1" LG KEY	316 SS
26	1	10117-01	DOWEL, 3/32" DIA X 1/4" LG	ACETAL
27	1	10122-01	SPACER, SEAL	PVC
28	1	51051-01	ASSY, SHAFT, ALL-SPLINE, 1253 PUMP	AL6XN
29	1	51002	NOZZLE, OUTLET, BOOSTER PUMP	AL6XN
30	3	10139-01	BOWL, DIFFUSER, 120 SERIES	NORYL

MECHANICAL SEAL KIT, ERI P/N 20004-01
HP-1253, 3-STAGE REBUILD KIT, ERI P/N 20007-01
HP-1253, O-RING KIT, ERI P/N 20007-02
BOOSTER PUMP TOOL KIT, ERI P/N 20003-01

MOTOR OPTIONS

DESCRIPTION
230/240 VOLTS 3 PHASE 60Hz
460/480 VOLTS 3 PHASE 60Hz
575/600 VOLTS 3 PHASE 60Hz
200/208 VOLTS 3 PHASE 50Hz WITH NEW NAME PLATE
380/400 VOLTS 3 PHASE 50Hz WITH NEW NAME PLATE
SPACE HEATERS, ANTI-CONDENSATION 115 VAC (182-215T NEMA FRAME SIZE)
SPACE HEATERS, ANTI-CONDENSATION 230/240 VAC (182-215T NEMA FRAME SIZE)
SPACE HEATERS, ANTI-CONDENSATION 460/480 VAC (182-215T NEMA FRAME SIZE)
FUNGUS PROOFING AND TROPICALIZATION (42-215T NEMA FRAME SIZE)
CE MARKING
CONDENSATE DRAIN
CUSTOM PAINT COLOR (SPECIFY COLOR ON PURCHASE ORDER)
MOTOR PROTECTION (THERMOSTAT ON WINDINGS)

2"
1"
REFERENCE SCALE

PRODUCT
DRAWING STATUS

INCH
UNLESS OTHERWISE SPECIFIED:
TOLERANCES:
FRACTIONAL: ± 1/32"
ANGULAR: MACH ±.5°
BEND ±1°
TWO PLACE DECIMAL: ±.01"
THREE PLACE DECIMAL: ±.005"
FOUR PLACE DECIMAL: ±.0002"
SURFACE FINISH:
ON PART 125 RMS
ON O-RING SURFACES 32 RMS
DIMENSIONING AND TOLERANCING PER ANSI Y14.5M (LATEST)
FINISH:
MATERIAL:
SHOWN

REV.	ECN NO.	DESCRIPTION	BY	DATE
1	04-064	CHANGE TO ALL SPLINE SHAFT	RAC	09/01/2004

REVISIONS

ENERGY RECOVERY INC.
1908 Doolittle Drive, San Leandro, CA 94577
Ph. (510)483-7370 / Fax: (510)483-7371
www.energy-recovery.com

DRAWN	RAC	05/12/2003
CHECKED	TLS	05/28/2003
ENG APPR.	RLS	05/28/2003

THIRD ANGLE PROJECTION

TITLE: ASSY, PUMP, BOOSTER, HP-1253

SIZE	DWG. NO.	REV
C	50002	1

SCALE: 1:1 | WEIGHT: | SHEET 1 OF 3

NOTES:

1. MOTORS ARE CUSTOMIZED TO EMPLOY A SPECIAL THRUST BEARING. CONTACT ENERGY RECOVERY INC. FOR REPLACEMENT OR REPAIR.
2. MOTOR = 10 H.P. 215TC FRAME
3. ENERGY RECOVERY INC. RESERVES TO RIGHT TO MAKE SPECIFICATION OR DIMENSION CHANGES WITHOUT NOTICE.
4. LABEL LOCATIONS ARE APPROX AS SHOWN.

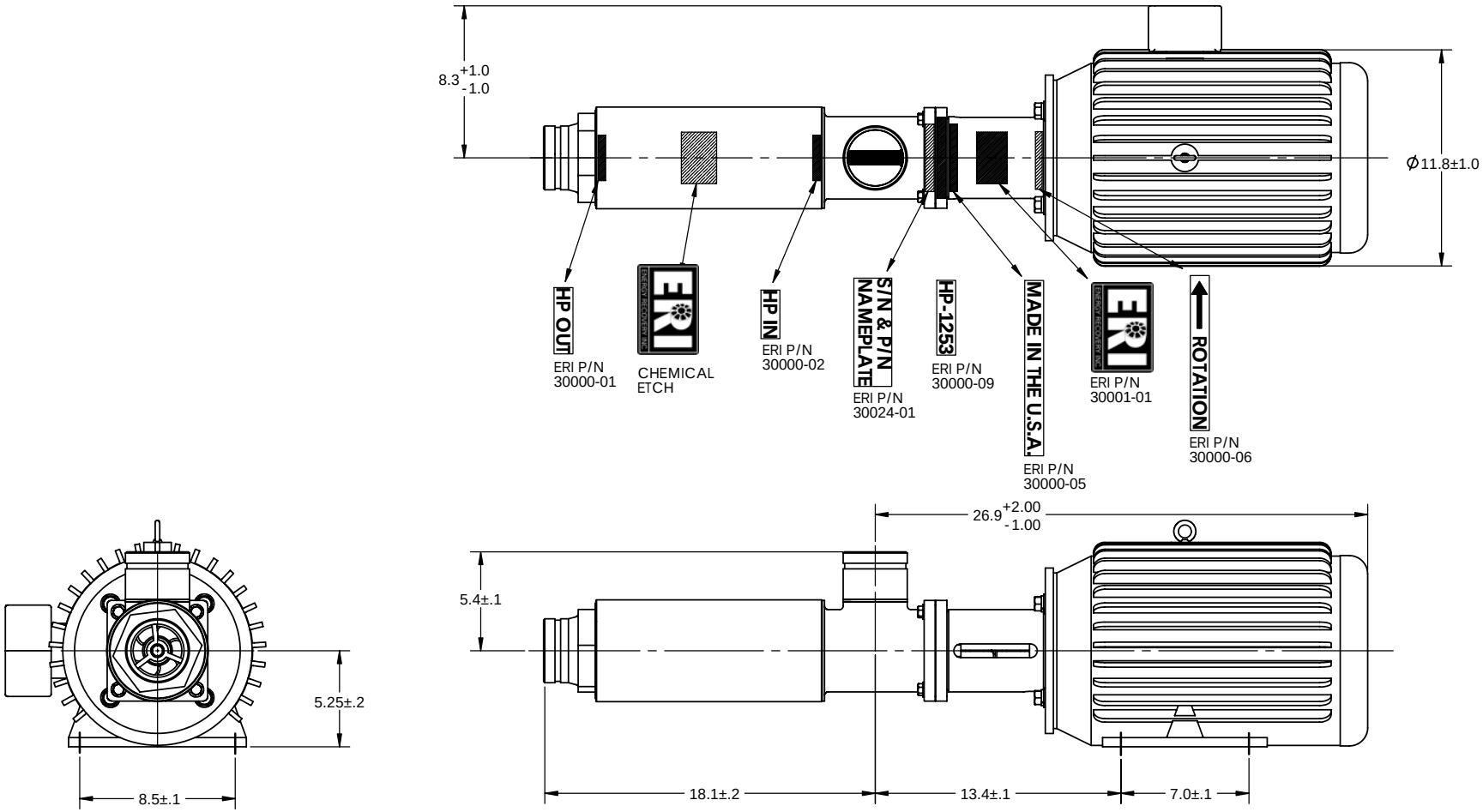

SEE SHEET 1 FOR REVISIONS

OVERALL DIMENSIONS
LABEL LOCATIONS

INCH

SPECIFICATIONS:

MODEL: HP-1253
OPERATING FLOW RANGE: 40-190 GPM / 9-43 m3/hr
H.P. : 10
FULL LOAD 460VAC (AMPS): 12

2" 1"
REFERENCE SCALE

PRODUCT
DRAWING STATUS

ENERGY RECOVERY INC.
1908 Doolittle Drive, San Leandro, CA 94577
Ph. (510)483-7370 / Fax: (510)483-7371
www.energy-recovery.com

DRAWN	RAC	05/12/2003
CHECKED	TLS	05/28/2003
ENG APPR.	RLS	05/28/2003

THIRD ANGLE PROJECTION

TITLE: ASSY, PUMP, BOOSTER, HP-1253

SIZE	DWG. NO.	REV
C	50002	1

SCALE: 1:4.5 | WEIGHT: | SHEET 2 OF 3

BILL OF MATERIALS				
ITEM NO.	shipping/QTY.	PART NO.	DESCRIPTION	MATERIAL
28	1	10010-01	CRATE, SHIPPING, 54" X 16 1/2" X 14"	HT/KD WOOD
29	2	10011-01	CAP, PROTECTIVE	PLASTIC

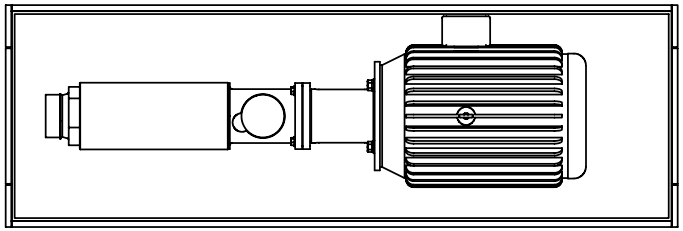

COVER NOT SHOWN
ATTACH BOOSTER PUMP ASSEMBLY TO BOTTOM OF CRATE USING HEX BOLT/WASHER
SHORE PUMP TO KEEP FROM SHIFTING OR MOVEMENT INSIDE CRATE DURING TRANSIT

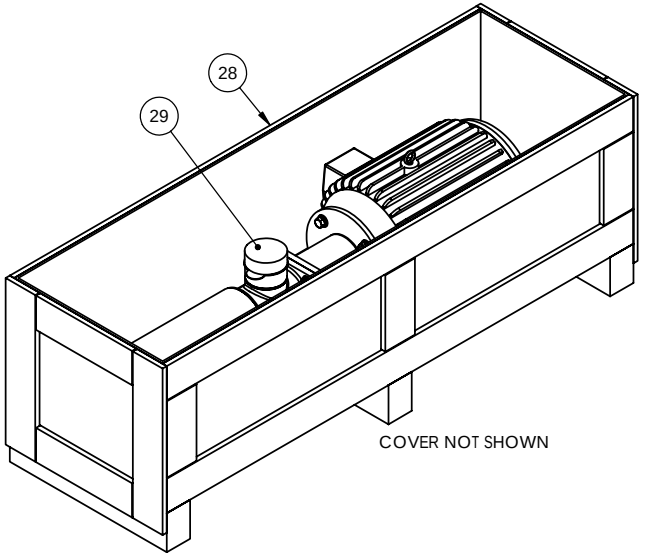

COVER NOT SHOWN

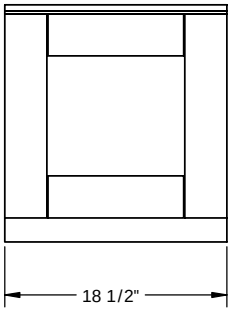

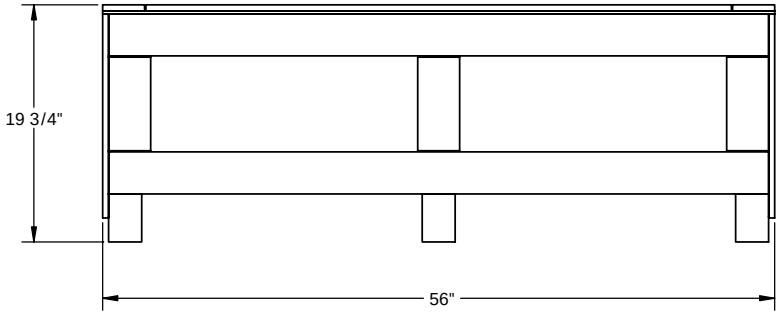

SHIPPING WEIGHT: 300 LBS / 136 Kgs

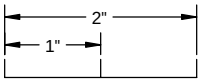

REFERENCE SCALE

SEE SHEET 1 FOR REVISIONS

INCH

ENERGY RECOVERY INC.

1908 Doolittle Drive, San Leandro, CA 94577
Ph. (510)483-7370 / Fax: (510)483-7371
www.energy-recovery.com

PRODUCT

DRAWING STATUS

DRAWN	RAC	05/12/2003
CHECKED	TLS	05/28/2003
ENG APPR.	RLS	05/28/2003

THIRD ANGLE PROJECTION

TITLE: ASSY, PUMP, BOOSTER, HP-1253

SIZE	DWG. NO.	REV
C	50002	1

SCALE: 1:8 | WEIGHT: | SHEET 3 OF 3

NOTES:
1. COAT STEPPED COUPLING BORES AND ALL THREADED FASTENERS WITH ANTI-SIEZE COMPOUND AT ASSEMBLY.
2. USE REQUIRED QTY OF SPACER WASHERS TO ACHIEVE SPACING OUTLINED IN THE OPERATIONS AND MAINTANCE MANUAL.
3. ENERGY RECOVERY INC., RESERVES THE RIGHT TO MAKE CHANGES AT ANY TIME WITHOUT NOTICE.

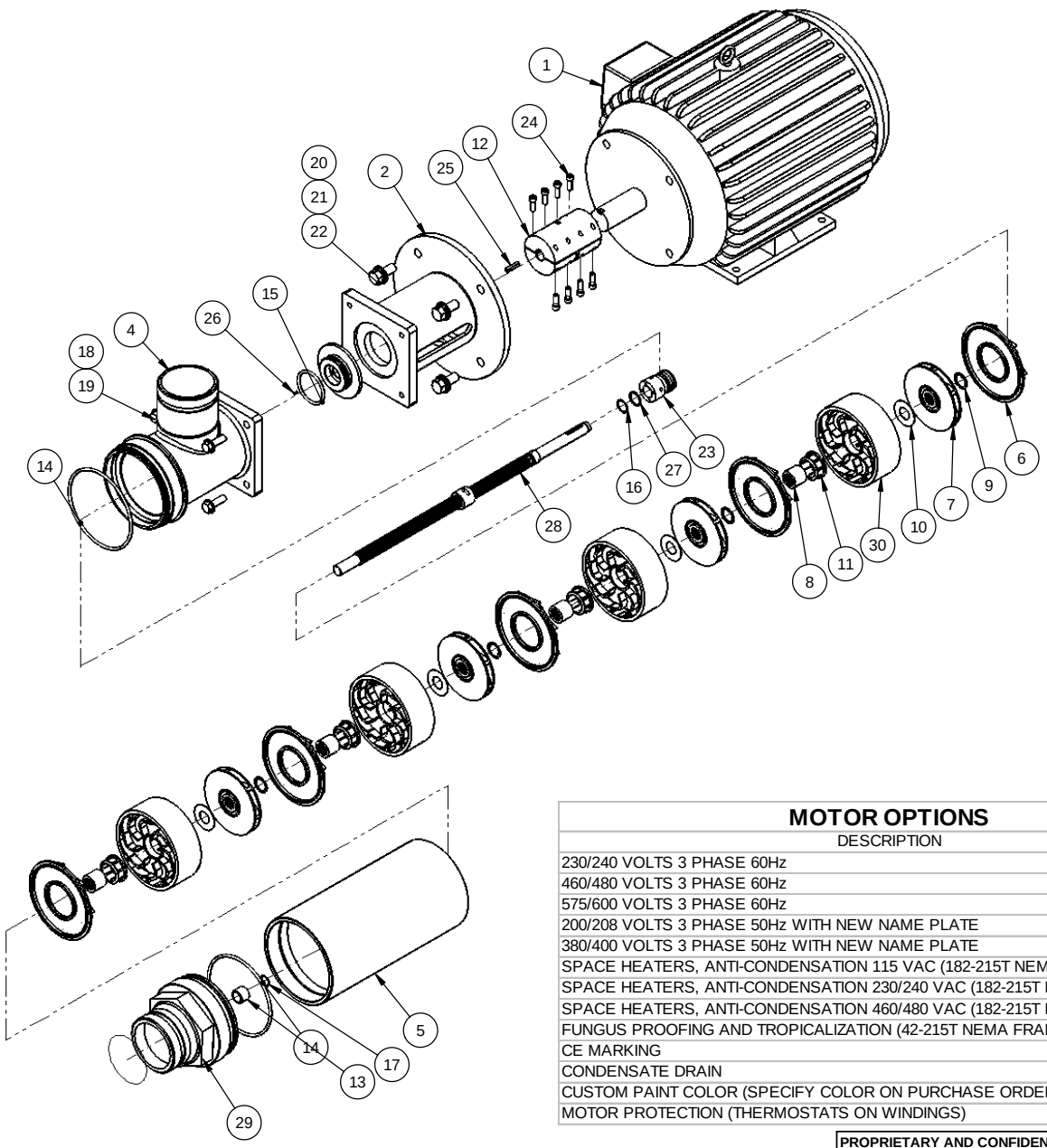

BILL OF MATERIALS

ITEM NO.	-01/QTY.	PART NO.	DESCRIPTION	MATERIAL
1	1	51035-01	MOTOR 7.5 H.P., 213T, BOLT ON C-FLANGE	---
2	1	51000-01	HOUSING, BELL, BOOSTER PUMP	ALUM
3	1	51008-01	PLATE, SEAL	AL6XN
4	1	51005-01	INLET, BOOSTER PUMP	AL6XN
5	1	51011-02	SHELL, BOOSTER PUMP	AL6XN
6	5	10142-01	PLATE, DIFFUSER, 080 SERIES	NORYL
7	4	10145-01	IMPELLER, PLATE, 080 SERIES	NORYL
8	4	51025-01	JOURNAL, BEARING	AL6XN
9	8	51027-01	WASHER, SPACER	AL6XN
10	4	51026-01	WASHER, THRUST	AL6XN
11	4	10141-01	BUSHING, RUBBER	RUBBER
12	1	51029-01	COUPLING, STEPPED, 1 3/8" X 5/8"	TITANIUM
13	1	51003-01	BUSHING, SLEEVE, .625 ID	RULON
14	2	10163-01	O-RING, -249	EPDM
15	1	10160-01	O-RING, -225	EPDM
16	1	10066-01	RING, RETAINING	C-276
17	1	10061-01	RING, RETAINING	C-276
18	4	10038-01	WASHER, FLAT, 3/8"	316 SS
19	4	10070-01	HHB, 3/8-16 X 1 1/4" LG	316 SS
20	4	10068-01	WASHER, FLAT, 1/2", TYPE A	18-8 SS
21	4	10044-01	WASHER, SPLIT LOCK	316 SS
22	4	10067-01	HHB, 1/2-13 X 1 1/4" LG	316 SS
23	1	10123-01	SEAL, SHAFT, MECHANICAL	316SS
24	8	10054-01	SHCS, 1/4-28 X 3/4" LG, CLASS 3A	316 SS
25	1	51041-01	3/16" SQ X 1" LG KEY	316 SS
26	1	10117-01	DOWEL, 3/32" DIA X 1/4" LG	ACETAL
27	1	10122-01	SPACER, SEAL	PVC
28	1	51053-01	ASSY, SHAFT, ALL-SPLINE, 8504 PUMP	AL6XN
29	1	51002	NOZZLE, OUTLET, BOOSTER PUMP	AL6XN
30	4	10138-02	BOWL, DIFFUSER, 080 SERIES	NORYL

MECHANICAL SEAL KIT, ERI P/N 20004-01
HP-8504, 4-STAGE REBUILD KIT, ERI P/N 20006-01
HP-8504 O-RING KIT, ERI P/N 20006-02
BOOSTER PUMP TOOL KIT 20003-01

MOTOR OPTIONS

DESCRIPTION
230/240 VOLTS 3 PHASE 60Hz
460/480 VOLTS 3 PHASE 60Hz
575/600 VOLTS 3 PHASE 60Hz
200/208 VOLTS 3 PHASE 50Hz WITH NEW NAME PLATE
380/400 VOLTS 3 PHASE 50Hz WITH NEW NAME PLATE
SPACE HEATERS, ANTI-CONDENSATION 115 VAC (182-215T NEMA FRAME SIZE)
SPACE HEATERS, ANTI-CONDENSATION 230/240 VAC (182-215T NEMA FRAME SIZE)
SPACE HEATERS, ANTI-CONDENSATION 460/480 VAC (182-215T NEMA FRAME SIZE)
FUNGUS PROOFING AND TROPICALIZATION (42-215T NEMA FRAME SIZE)
CE MARKING
CONDENSATE DRAIN
CUSTOM PAINT COLOR (SPECIFY COLOR ON PURCHASE ORDER)
MOTOR PROTECTION (THERMOSTATS ON WINDINGS)

2" 1"
REFERENCE SCALE

PRODUCT
DRAWING STATUS

INCH
UNLESS OTHERWISE SPECIFIED:
TOLERANCES:
FRACTIONAL: ± 1/32"
ANGULAR: MACH ±.5° BEND ±1°
TWO PLACE DECIMAL: ±.01"
THREE PLACE DECIMAL: ±.005"
FOUR PLACE DECIMAL: ±.0002"
SURFACE FINISH:
ON PART 125 RMS
ON O-RING SURFACES 32 RMS
DIMENSIONING AND TOLERANCING PER ANSI Y14.5M (LATEST)
FINISH:
MATERIAL:
SHOWN

REV.	ECN NO.	DESCRIPTION	BY	DATE
1	04-063	CHANGE TO ALL SPLINE SHAFT	RAC	09/01/2004

REVISIONS

ENERGY RECOVERY INC.
1908 Doolittle Drive, San Leandro, CA 94577
Ph. (510)483-7370 / Fax: (510)483-7371
www.energy-recovery.com

DRAWN	RAC	05/12/2003
CHECKED	TLS	05/28/2003
ENG APPR.	RLS	05/28/2003

THIRD ANGLE PROJECTION

TITLE: ASSY, PUMP, BOOSTER, HP-8504

SIZE	DWG. NO.	REV
C	50001	1

SCALE: 1:1 WEIGHT: SHEET 1 OF 3

NOTES:

1. MOTORS ARE CUSTOMIZED TO EMPLOY A SPECIAL THRUST BEARING. CONTACT ENERGY RECOVERY INC. FOR REPLACEMENT OR REPAIR.
2. MOTOR = 7.5 H.P. 213T FRAME
3. ENERGY RECOVERY INC. RESERVES TO RIGHT TO MAKE SPECIFICATION OR DIMENSION CHANGES WITHOUT NOTICE.
4. LABEL LOCATIONS ARE APPROX AS SHOWN.

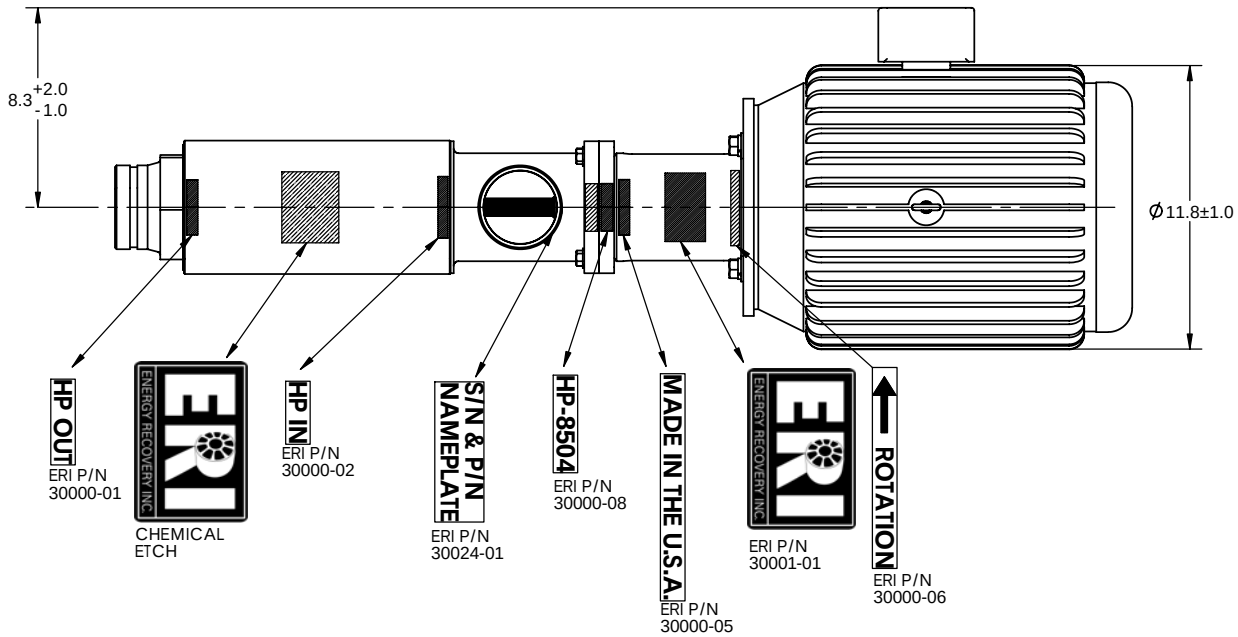

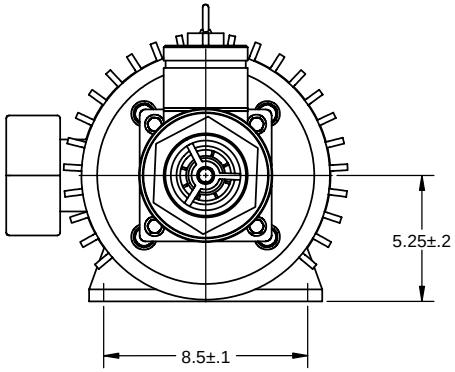

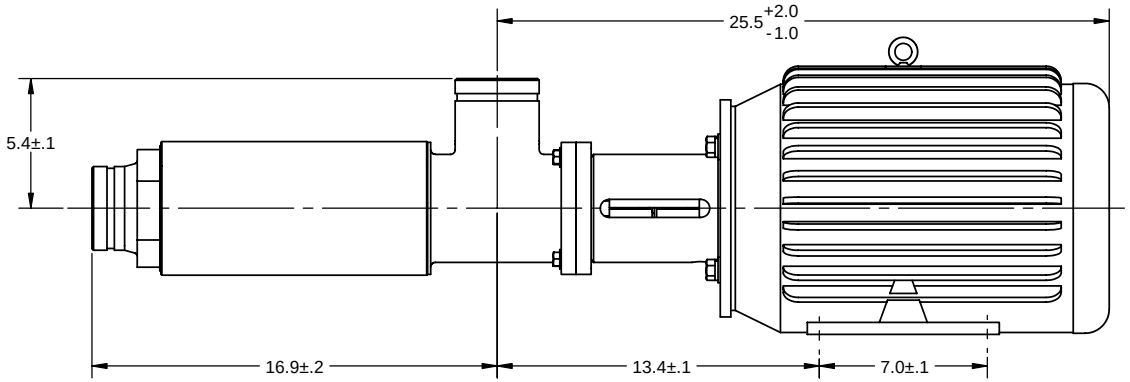

SEE SHEET 1 FOR REVISIONS

OVERALL DIMENSIONS
LABEL LOCATIONS

INCH

SPECIFICATIONS:

MODEL: HP-8504
OPERATING FLOW RANGE: 30-110 GPM / 7-25 m3/hr
H.P. : 7.5
FULL LOAD 460VAC (AMPS): 9

2" 1"
REFERENCE SCALE

PRODUCT

DRAWING STATUS

ENERGY RECOVERY INC.

1908 Doolittle Drive, San Leandro, CA 94577
Ph. (510)483-7370 / Fax: (510)483-7371
www.energy-recovery.com

DRAWN	RAC	05/12/2003
CHECKED	TLS	05/28/2003
ENG APPR.	RLS	05/28/2003

THIRD ANGLE PROJECTION

TITLE: ASSY, PUMP, BOOSTER, HP-8504

SIZE	DWG. NO.	REV
C	50001	1

SCALE: 1:1 | WEIGHT: | SHEET 2 OF 3

BILL OF MATERIALS				
ITEM NO.	-01/QTY.	PART NO.	DESCRIPTION	MATERIAL
28	2	10011-01	CAP, PROTECTIVE	PLASTIC
32	1	10010-01	CRATE, SHIPPING, 54" X 16 1/2" X 14"	HT/KD WOOD

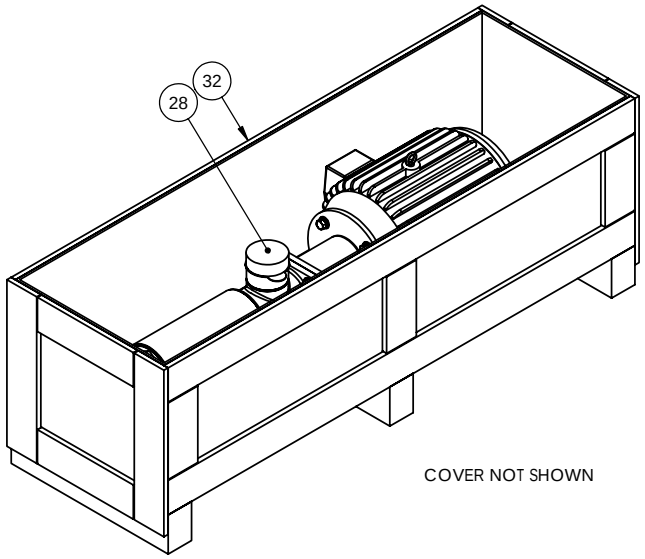

COVER NOT SHOWN

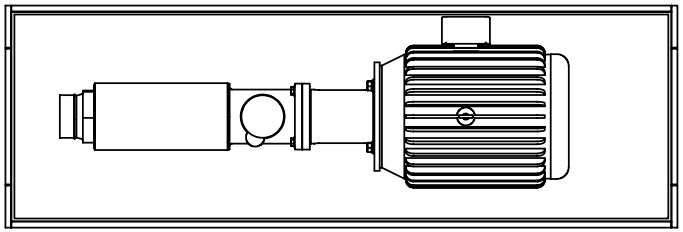

COVER NOT SHOWN
ATTACH BOOSTER PUMP ASSEMBLY TO BOTTOM OF CRATE USING HEX BOLT/WASHER
SHORE PUMP TO KEEP FROM SHIFTING OR MOVEMENT INSIDE CRATE DURING TRANSIT

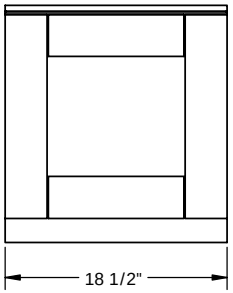

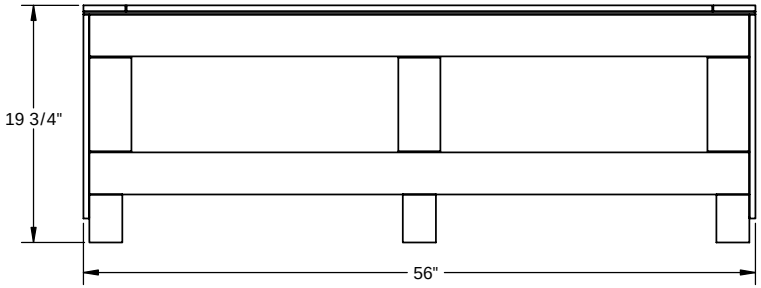

SEE SHEET 1 FOR REVISIONS

SHIPPING CONFIGURATION

SHIPPING WEIGHT: 300 LBS / 136 Kgs

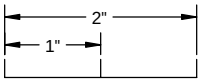

REFERENCE SCALE

INCH

PROPRIETARY AND CONFIDENTIAL

THE INFORMATION CONTAINED IN THIS DRAWING IS THE SOLE PROPERTY OF ENERGY RECOVERY INC. ANY REPRODUCTION IN PART OR AS A WHOLE WITHOUT THE WRITTEN PERMISSION OF ENERGY RECOVERY INC. IS PROHIBITED.

PRODUCT

DRAWING STATUS

DRAWN	RAC	05/12/2003
CHECKED	TLS	05/28/2003
ENG APPR.	RLS	05/28/2003

THIRD ANGLE PROJECTION

ENERGY RECOVERY INC.
1908 Doolittle Drive, San Leandro, CA 94577
Ph. (510)483-7370 / Fax: (510)483-7371
www.energy-recovery.com

TITLE: ASSY, PUMP, BOOSTER, HP-8504

SIZE	DWG. NO.	REV
C	50001	1

SCALE: 1:8 | WEIGHT: | SHEET 3 OF 3

NOTES:
1. COAT STEPPED COUPLING BORES AND ALL THREADED FASTENERS WITH ANTI-SIEZE COMPOUND AT ASSEMBLY.
2. USE REQUIRED QTY OF SPACER WASHERS TO ACHIEVE SPACING OUTLINED IN THE OPERATIONS AND MAINTANCE MANUAL.
3. ENERGY RECOVERY INC., RESERVES THE RIGHT TO MAKE CHANGES AT ANY TIME WITHOUT NOTICE.

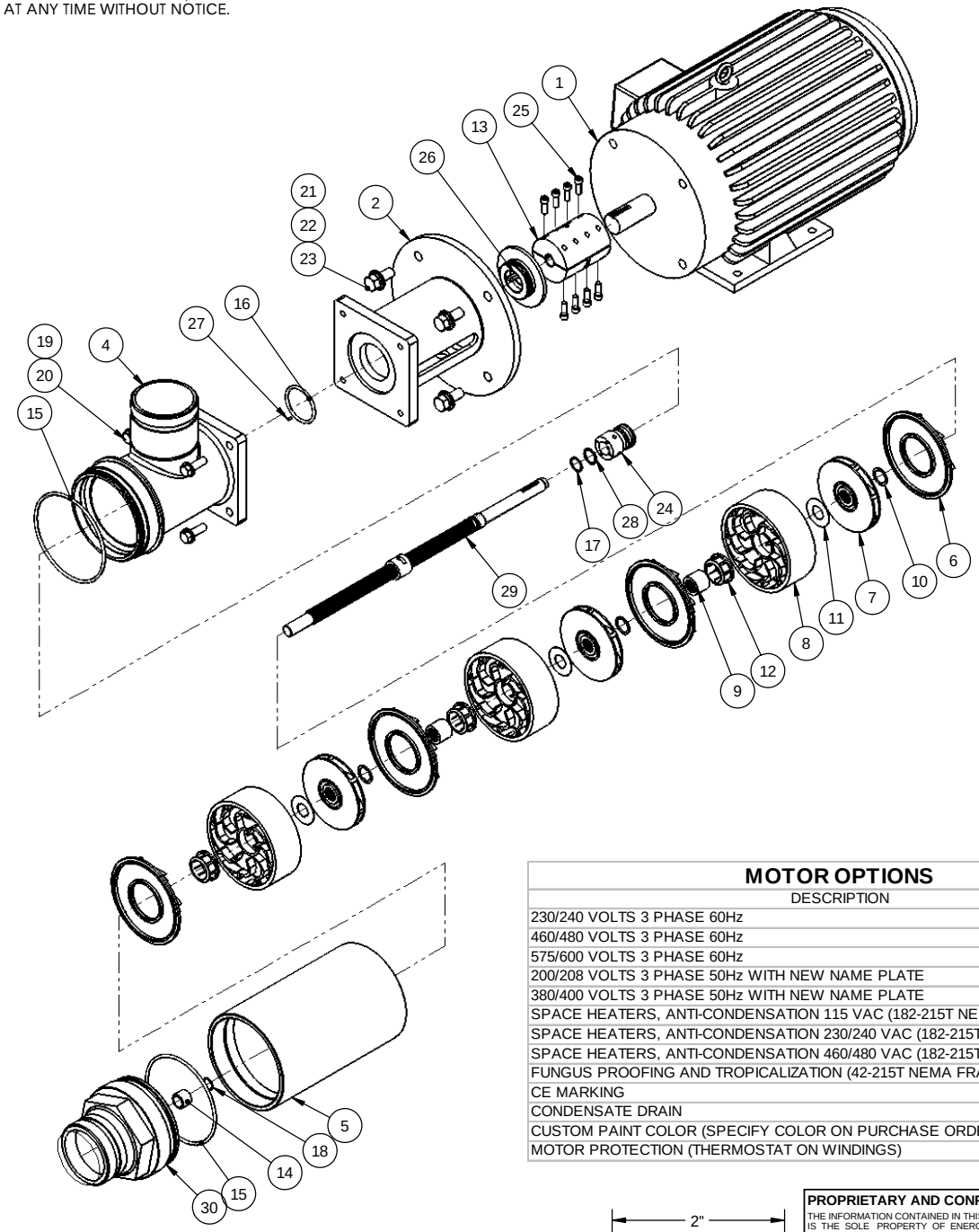

BILL OF MATERIALS

ITEM NO.	-01/QTY.	PART NO.	DESCRIPTION	MATERIAL
1	1	51034-01	MOTOR 5 H.P., 184T, BOLT ON C-FLANGE	---
2	1	51000-01	HOUSING, BELL, BOOSTER PUMP	ALUM
3	1	51008-01	PLATE, SEAL	AL6XN
4	1	51005-01	INLET, BOOSTER PUMP	AL6XN
5	1	51011-01	SHELL, BOOSTER PUMP	AL6XN
6	4	10142-01	PLATE, DIFFUSER, 080 SERIES	NORYL
7	3	10145-01	IMPELLER, PLATE, 080 SERIES	NORYL
8	3	10138-01	BOWL, DIFFUSER, 080 SERIES	NORYL
9	3	51025-01	JOURNAL, BEARING	AL6XN
10	6	51027-01	WASHER, SPACER	AL6XN
11	3	51026-01	WASHER, THRUST	AL6XN
12	3	10141-01	BUSHING, RUBBER	RUBBER
13	1	51028-01	COUPLING, STEPPED, 1 1/8" X 5/8"	TITANIUM
14	1	51003-01	BUSHING, SLEEVE, .625 ID	RULON
15	2	10163-01	O-RING, -249	EPDM
16	1	10160-01	O-RING, -225	EPDM
17	1	10066-01	RING, RETAINING	C-276
18	1	10061-01	RING, RETAINING	C-276
19	4	10038-01	WASHER, FLAT, 3/8"	316 SS
20	4	10070-01	HHB, 3/8-16 X 1 1/4" LG	316 SS
21	4	10068-01	WASHER, FLAT, 1/2", TYPE A	18-8 SS
22	4	10044-01	WASHER, SPLIT LOCK	316 SS
23	4	10067-01	HHB, 1/2-13 X 1 1/4" LG	316 SS
24	1	10123-01	SEAL, SHAFT, MECHANICAL	316SS
25	8	10054-01	SHCS, 1/4-28 X 3/4" LG, CLASS 3A	316 SS
26	1	51041-01	3/16" SQ X 1" LG KEY	316 SS
27	1	10117-01	DOWEL, 3/32" DIA X 1/4" LG	ACETAL
28	1	10122-01	SPACER, SEAL	PVC
29	1	51052-01	ASSY, SHAFT, ALL-SPLINE, 8503 PUMP	AL6XN
30	1	51002	NOZZLE, OUTLET, BOOSTER PUMP	AL6XN

MECHANICAL SEAL KIT, ERI P/N 20004-01
HP-8503, 3-STAGE REBUILD KIT, ERI P/N 20005-01
HP-8503, BOOSTER PUMP O-RING KIT, ERI P/N 20005-02
BOOSTER PUMP TOOL KIT, ERI P/N 20003-01

MOTOR OPTIONS

DESCRIPTION
230/240 VOLTS 3 PHASE 60Hz
460/480 VOLTS 3 PHASE 60Hz
575/600 VOLTS 3 PHASE 60Hz
200/208 VOLTS 3 PHASE 50Hz WITH NEW NAME PLATE
380/400 VOLTS 3 PHASE 50Hz WITH NEW NAME PLATE
SPACE HEATERS, ANTI-CONDENSATION 115 VAC (182-215T NEMA FRAME SIZE)
SPACE HEATERS, ANTI-CONDENSATION 230/240 VAC (182-215T NEMA FRAME SIZE)
SPACE HEATERS, ANTI-CONDENSATION 460/480 VAC (182-215T NEMA FRAME SIZE)
FUNGUS PROOFING AND TROPICALIZATION (42-215T NEMA FRAME SIZE)
CE MARKING
CONDENSATE DRAIN
CUSTOM PAINT COLOR (SPECIFY COLOR ON PURCHASE ORDER)
MOTOR PROTECTION (THERMOSTAT ON WINDINGS)

2"
1"
REFERENCE SCALE

PRODUCT
DRAWING STATUS

INCH
UNLESS OTHERWISE SPECIFIED:
TOLERANCES:
FRACTIONAL: ± 1/32"
ANGULAR: MACH ±.5°
BEND ±1°
TWO PLACE DECIMAL: ±.01"
THREE PLACE DECIMAL: ±.005"
FOUR PLACE DECIMAL: ±.0002"
SURFACE FINISH:
ON PART 125 RMS
ON O-RING SURFACES 32 RMS
DIMENSIONING AND TOLERANCING PER ANSI Y14.5M (LATEST)
FINISH:
MATERIAL:
SHOWN

REV.	ECN NO.	DESCRIPTION	BY	DATE
1	04-062	CHANGE TO ALL SPLINE SHAFT	RAC	09/01/2004

REVISIONS

ENERGY RECOVERY INC.
1908 Doolittle Drive, San Leandro, CA 94577
Ph. (510)483-7370 / Fax: (510)483-7371
www.energy-recovery.com

DRAWN	RAC	05/12/2003
CHECKED	TLS	05/28/2003
ENG APPR.	RLS	05/28/2003

THIRD ANGLE PROJECTION

TITLE: ASSY, PUMP, BOOSTER, HP-8503

SIZE	DWG. NO.	REV
C	50000	1

SCALE: 1:1 | WEIGHT: | SHEET 1 OF 3

NOTES:

1. MOTORS ARE CUSTOMIZED TO EMPLOY A SPECIAL THRUST BEARING. CONTACT ENERGY RECOVERY INC. FOR REPLACEMENT OR REPAIR.
2. MOTOR = 5 H.P. 184T FRAME
3. ENERGY RECOVERY INC. RESERVES TO RIGHT TO MAKE SPECIFICATION OR DIMENSION CHANGES WITHOUT NOTICE.
4. LABEL LOCATIONS ARE APPROX AS SHOWN.

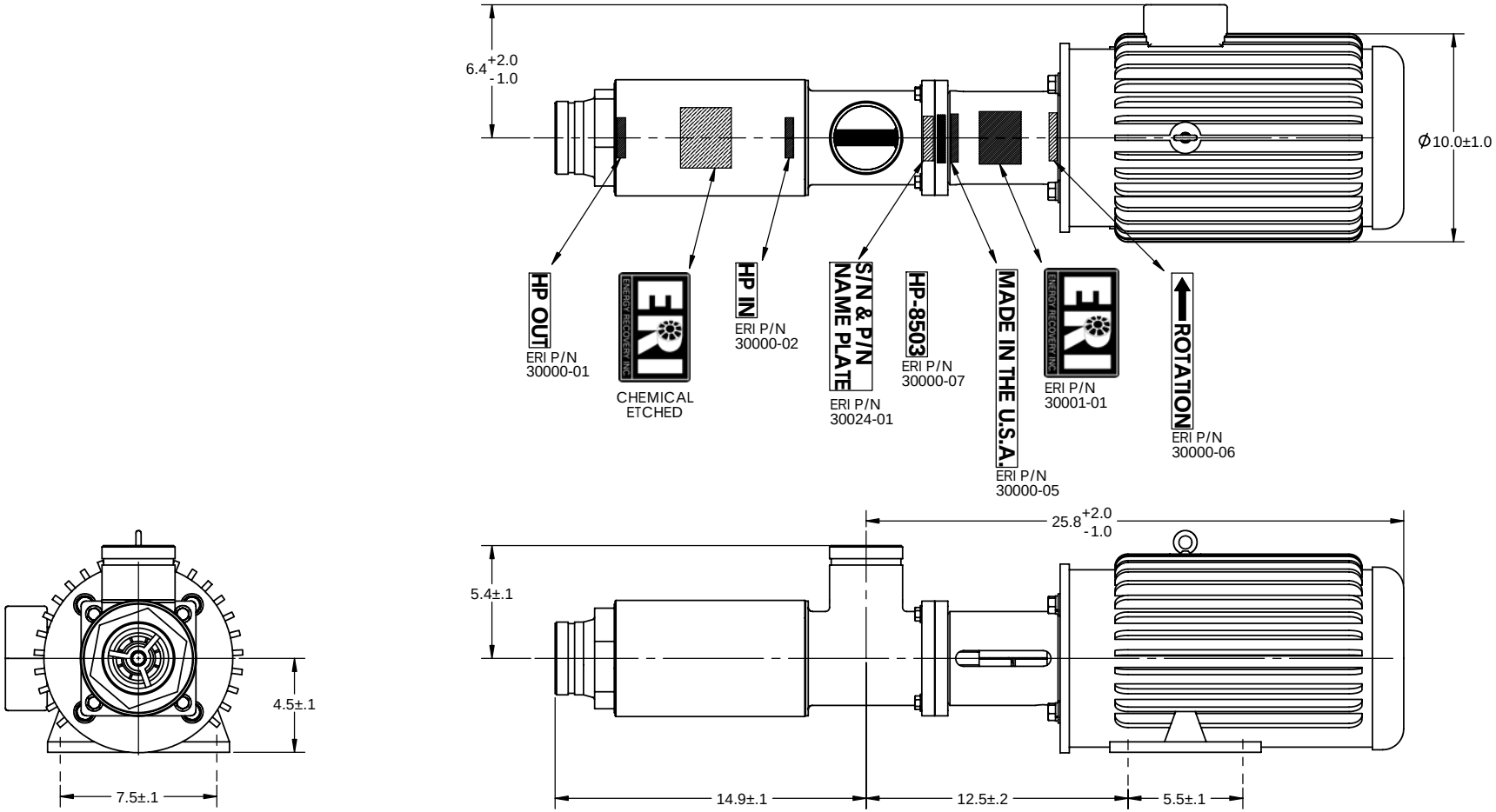

SPECIFICATIONS:

MODEL: HP-8503
OPERATING FLOW RANGE: 30-110 GPM / 7-25 m3/hr
H.P. : 5
FULL LOAD 460VAC (AMPS): 6

2" 1"
REFERENCE SCALE

OVERALL DIMENSIONS LABEL LOCATIONS

INCH

SEE SHEET 1 FOR REVISIONS

ENERGY RECOVERY INC.
1908 Doolittle Drive, San Leandro, CA 94577
Ph. (510)483-7370 / Fax: (510)483-7371
www.energy-recovery.com

DRAWN	RAC	05/12/2003
CHECKED	TLS	05/28/2003
ENG APPR.	RLS	05/28/2003

THIRD ANGLE PROJECTION

PRODUCT
DRAWING STATUS

TITLE: ASSY, PUMP, BOOSTER, HP-8503

SIZE	DWG. NO.	REV
C	50000	1

SCALE: 1:1 | WEIGHT: | SHEET 2 OF 3

BILL OF MATERIALS				
ITEM NO.	SHIPPING/QTY.	PART NO.	DESCRIPTION	MATERIAL
29	1	10010-01	CRATE, SHIPPING, 54" X 16 1/2" X 14"	HT/KD WOOD
30	2	10011-01	CAP, PROTECTIVE	PLASTIC

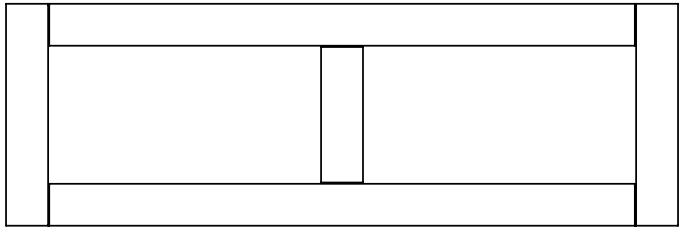

COVER NOT SHOWN
ATTACH BOOSTER PUMP ASSEMBLY TO BOTTOM OF CRATE USING HEX BOLT/WASHER
SHORE PUMP TO KEEP FROM SHIFTING OR MOVEMENT INSIDE CRATE DURING TRANSIT

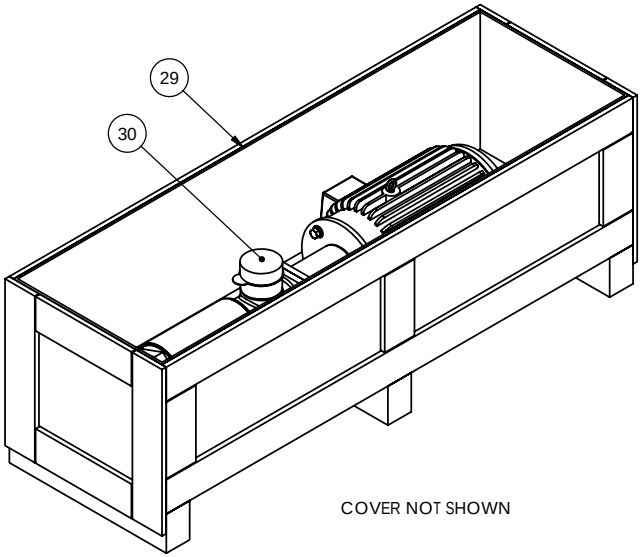

COVER NOT SHOWN

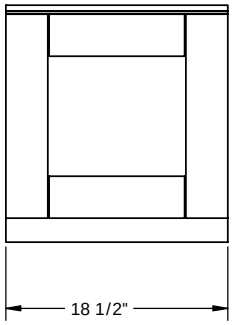

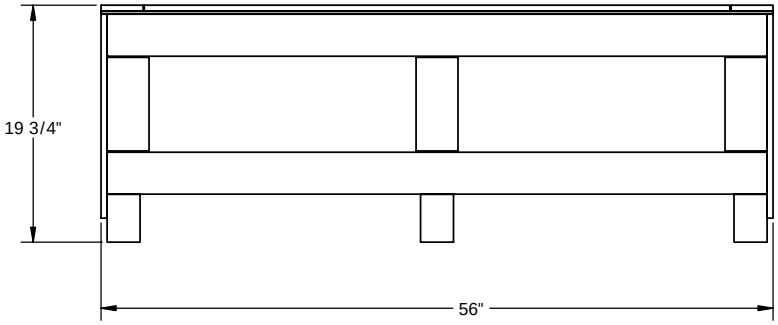

SHIPPING CONFIGURATION

SHIPPING WEIGHT: 280 LBS / 127 Kgs

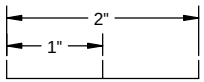

REFERENCE SCALE

INCH

SEE SHEET 1 FOR REVISIONS

ENERGY RECOVERY INC.
1908 Doolittle Drive, San Leandro, CA 94577
Ph. (510)483-7370 / Fax: (510)483-7371
www.energy-recovery.com

DRAWN	RAC	05/12/2003
CHECKED	TLS	05/28/2003
ENG APPR.	RLS	05/28/2003

THIRD ANGLE PROJECTION

TITLE: ASSY, PUMP, BOOSTER, HP-8503

SIZE	DWG. NO.	REV
C	50000	1

SCALE: 1:8 | WEIGHT: | SHEET 3 OF 3

PRODUCT

DRAWING STATUS

NOTES:
1. COAT STEPPED COUPLING BORES AND ALL THREADED FASTENERS WITH ANTI-SIEZE COMPOUND AT ASSEMBLY.
2. USE REQUIRED QTY OF SPACER WASHERS TO ACHIEVE SPACING OUTLINED IN THE OPERATIONS AND MAINTANCE MANUAL.
3. ENERGY RECOVERY INC., RESERVES THE RIGHT TO MAKE CHANGES AT ANY TIME WITHOUT NOTICE.

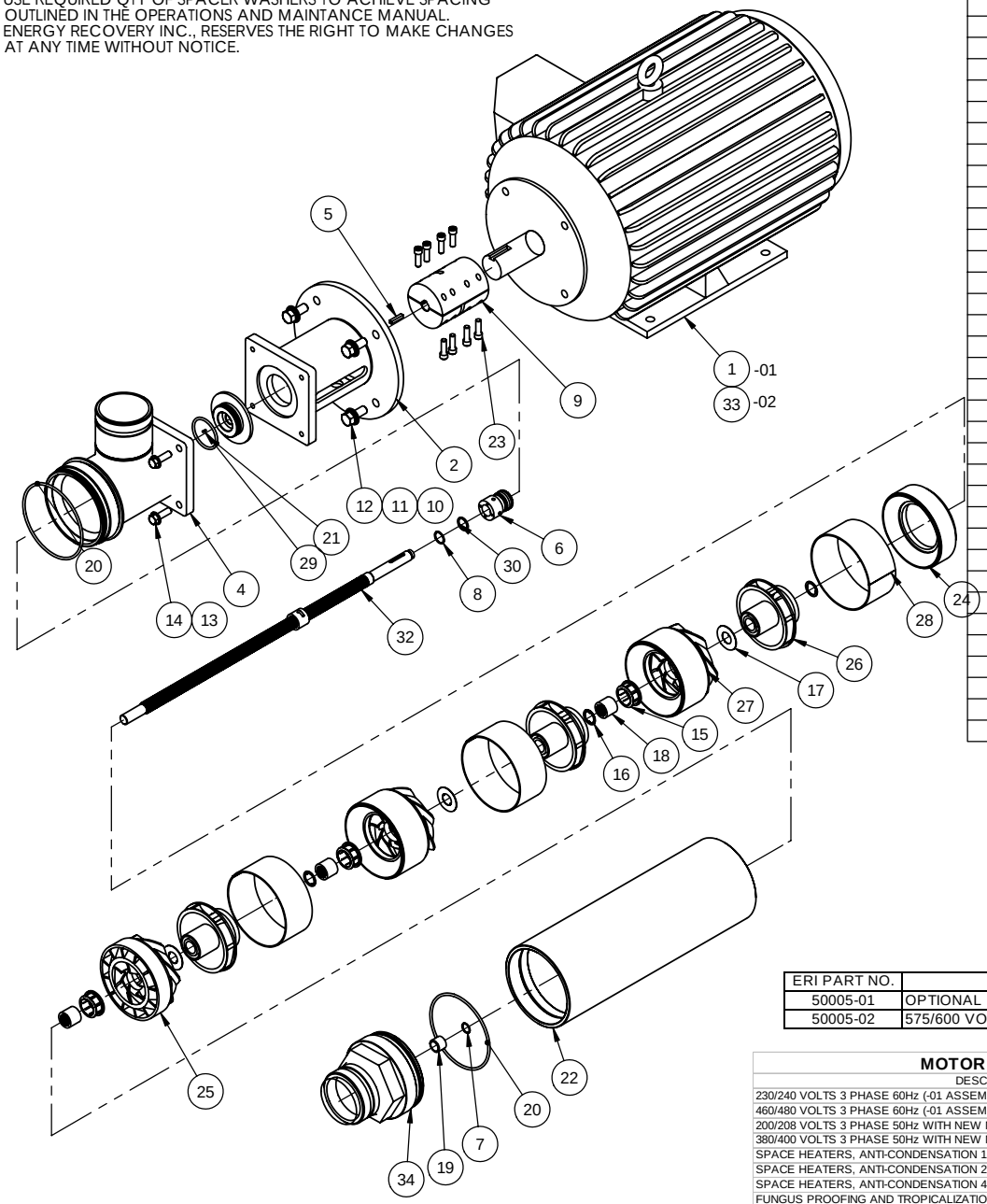

BILL OF MATERIALS

ITEM NO.	-01/QTY.	-02/QTY.	PART NO.	DESCRIPTION	MATERIAL
1	1	-	51040-01	MOTOR 20 H.P., 256TC	---
2	1	1	51000-01	HOUSING, BELL, BOOSTER PUMP	ALUM
3	1	1	51008-01	PLATE, SEAL	AL6XN
4	1	1	51005-01	INLET, BOOSTER PUMP	AL6XN
5	1	1	51041-01	3/16" SQ X 1" LG KEY	316 SS
6	1	1	10123-01	SEAL, SHAFT, MECHANICAL	316SS
7	1	1	10061-01	RING, RETAINING	C-276
8	1	1	10066-01	RING, RETAINING	C-276
9	1	1	51030-01	COUPLING, STEPPED, 1 5/8" X 5/8"	TITANIUM
10	4	4	10068-01	WASHER, FLAT, 1/2", TYPE A	18-8 SS
11	4	4	10044-01	WASHER, SPLIT LOCK	316 SS
12	4	4	10067-01	HHB, 1/2-13 X 1 1/4" LG	316 SS
13	4	4	10038-01	WASHER, FLAT, 3/8"	316 SS
14	4	4	10070-01	HHB, 3/8-16 X 1 1/4" LG	316 SS
15	3	3	10141-01	BUSHING, RUBBER	RUBBER
16	6	6	51027-01	WASHER, SPACER	AL6XN
17	3	3	51026-01	WASHER, THRUST	AL6XN
18	3	3	51025-01	JOURNAL, BEARING	AL6XN
19	1	1	51003-01	BUSHING, SLEEVE, .625 ID	RULON
20	2	2	10163-01	O-RING, -249	EPDM
21	1	1	10160-01	O-RING, -225	EPDM
22	1	1	51011-06	SHELL, BOOSTER PUMP	AL6XN
23	8	8	10059-01	SHCS, 5/16-24 X 1" LG	316 SS
24	1	1	51033-01	DIFFUSER, INLET, 240 SERIES	PVC
25	1	1	10144-01	PLATE, DIFFUSER, 240 SERIES	NORYL
26	3	3	10148-01	IMPELLER, PLATE 240 SERIES	NORYL
27	2	2	10140-01	BOWL, DIFFUSER, 240 SERIES	NORYL
28	3	3	51031-01	SLEEVE, BOWL	AL6XN
29	1	1	10117-01	DOWEL, 3/32" DIA X 1/4" LG	ACETAL
30	1	1	10122-01	SPACER, SEAL	PVC
31	-	1	51038-01	MOTOR 20 H.P., 256T, BOLT ON C-FLANGE	---
32	1	-	51050-01	ASSY, SHAFT, ALL-SPLINE, 2403 PUMP	AL6XN
33	-	1	51050-01	ASSY, SHAFT, ALL-SPLINE, 2403 PUMP	AL6XN
34	1	-	51002	NOZZLE, OUTLET, BOOSTER PUMP	AL6XN
35	-	1	51001	NOZZLE, OUTLET, BOOSTER PUMP	AL6XN

MECHANICAL SEAL KIT, ERI P/N 20004-01
HP-2403, 3-STAGE REBUILD KIT, ERI P/N 20010-01
HP-2403, O-RING KIT, ERI P/N 20010-02
BOOSTER PUMP TOOL KIT, ERI P/N 20003-01

ERI PART NO.	DESCRIPTION
50005-01	OPTIONAL POWER
50005-02	575/600 VOLTS 3 PHASE 60Hz ONLY

MOTOR OPTIONS

DESCRIPTION
230/240 VOLTS 3 PHASE 60Hz (-01 ASSEMBLY ONLY)
460/480 VOLTS 3 PHASE 60Hz (-01 ASSEMBLY ONLY)
200/208 VOLTS 3 PHASE 50Hz WITH NEW NAME PLATE (-01 ASSEMBLY ONLY)
380/400 VOLTS 3 PHASE 50Hz WITH NEW NAME PLATE (-01 ASSEMBLY ONLY)
SPACE HEATERS, ANTI-CONDENSATION 115 VAC (254-316T NEMA FRAME SIZE)
SPACE HEATERS, ANTI-CONDENSATION 230/240 VAC (254-316T NEMA FRAME SIZE)
SPACE HEATERS, ANTI-CONDENSATION 460/480 VAC (254-316T NEMA FRAME SIZE)
FUNGUS PROOFING AND TROPICALIZATION (254-363T NEMA FRAME SIZE)
CE MARKING
CONDENSATE DRAIN
CUSTOM PAINT COLOR (SPECIFY COLOR ON PURCHASE ORDER)
MOTOR PROTECTION (THERMOSTAT ON WINDINGS)

2" 1"
REFERENCE SCALE

PRODUCT
DRAWING STATUS

-01 SHOWN
INCH

UNLESS OTHERWISE SPECIFIED:
TOLERANCES:
FRACTIONAL: ± 1/32"
ANGULAR: MACH ±.5° BEND ±1°
TWO PLACE DECIMAL: ±.01"
THREE PLACE DECIMAL: ±.005"
FOUR PLACE DECIMAL: ±.0002"
SURFACE FINISH:
ON PART 125 RMS
ON O-RING SURFACES 32 RMS
DIMENSIONING AND TOLERANCING PER ANSI Y14.5M (LATEST)
FINISH:
MATERIAL: SHOWN

REV.	ECN NO.	DESCRIPTION	BY	DATE
1	04-067	CHANGE TO ALL SPLINE SHAFT	RAC	09/01/2004

REVISIONS

ENERGY RECOVERY INC.
1908 Doolittle Drive, San Leandro, CA 94577
Ph. (510)483-7370 / Fax: (510)483-7371
www.energy-recovery.com

DRAWN	RAC	05/12/2003
CHECKED	TLS	05/28/2003
ENG APPR.	RLS	05/28/2003

THIRD ANGLE PROJECTION

TITLE: ASSY, PUMP, BOOSTER, HP-2403

SIZE	DWG. NO.	REV
C	50005	1

SCALE: 1:4.5 WEIGHT: SHEET 1 OF 3

NOTES:

1. MOTORS ARE CUSTOMIZED TO EMPLOY A SPECIAL THRUST BEARING. CONTACT ENERGY RECOVERY INC. FOR REPLACEMENT OR REPAIR.
2. MOTOR:
   -01 = 20 H.P. 256TC FRAME
   -02 = 10 H.P. 256T WITH BOLT ON C-FLANGE KIT
3. ENERGY RECOVERY INC. RESERVES TO RIGHT TO MAKE SPECIFICATION OR DIMENSION CHANGES WITHOUT NOTICE.
4. LABEL LOCATIONS ARE APPROX AS SHOWN.

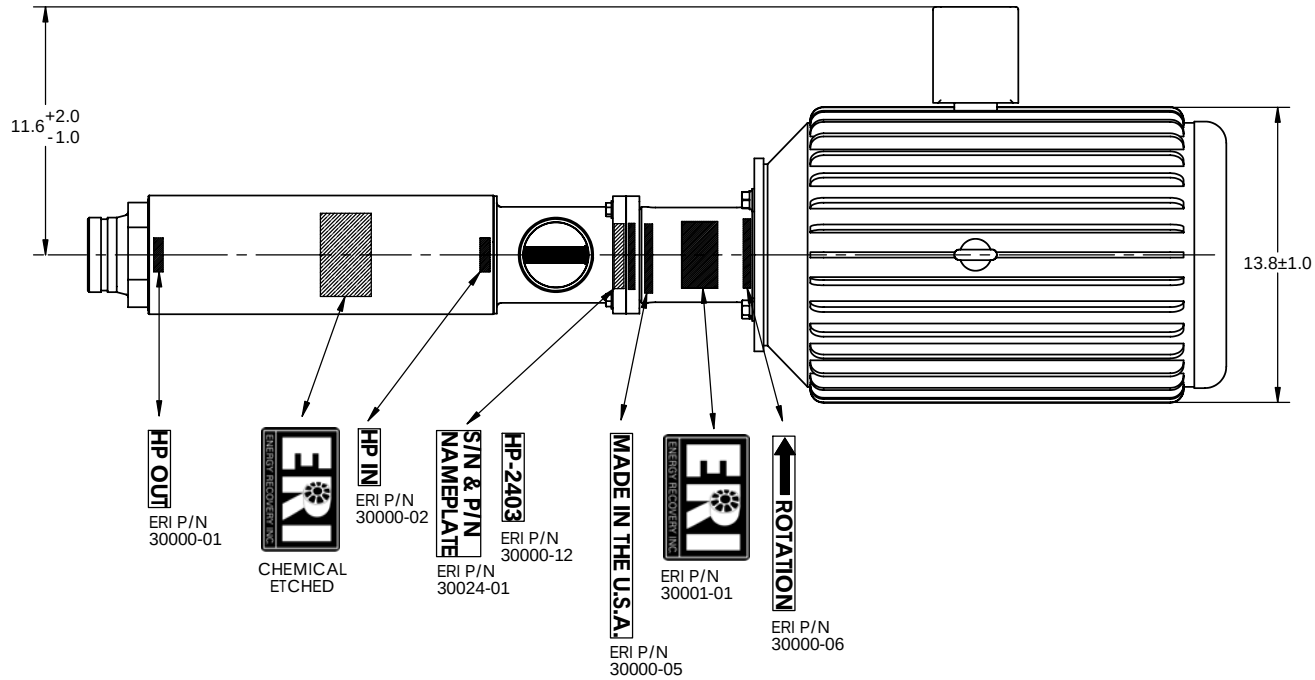

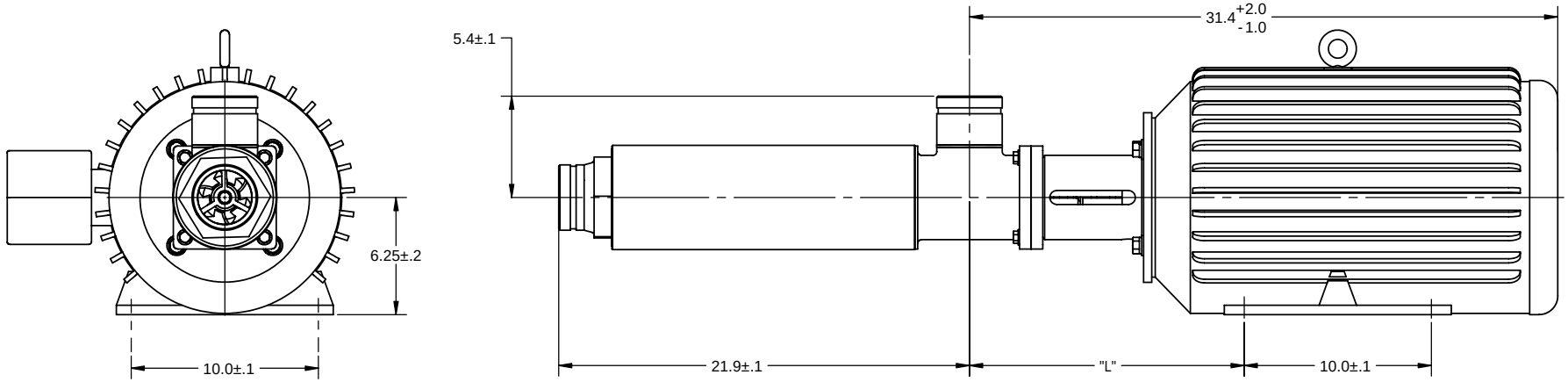

ERI PART NO.	"L"
50005-01	14.7 +/- .1
50005-02	14.2 +/- .1

SEE SHEET 1 FOR REVISIONS

SPECIFICATIONS:

MODEL: HP-2403
OPERATING FLOW RANGE: 80-300 GPM / 18-68 m3/hr
H.P. : 20
FULL LOAD 460VAC (AMPS): 23

OVERALL DIMENSIONS LABEL LOCATIONS

INCH

2" 1"
REFERENCE SCALE

PRODUCT
DRAWING STATUS

ENERGY RECOVERY INC.
1908 Doolittle Drive, San Leandro, CA 94577
Ph. (510)483-7370 / Fax: (510)483-7371
www.energy-recovery.com

DRAWN	RAC	05/12/2003
CHECKED	TLS	05/28/2003
ENG APPR.	RLS	05/28/2003

THIRD ANGLE PROJECTION

TITLE: ASSY, PUMP, BOOSTER, HP-2403

SIZE	DWG. NO.	REV
C	50005	1

SCALE: 1:4.5 | WEIGHT: | SHEET 2 OF 3

BILL OF MATERIALS				
ITEM NO.	shipping/QTY.	PART NO.	DESCRIPTION	MATERIAL
31	1	10010-01	CRATE, SHIPPING, 54" X 16 1/2" X 14"	HT/KD WOOD
32	2	10011-01	CAP, PROTECTIVE	PLASTIC

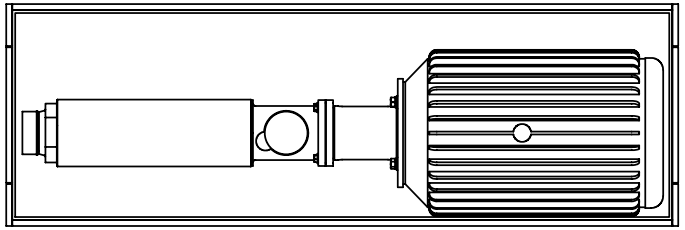

COVER NOT SHOWN
IF REQUIRED REMOVE ELECTRICAL JUNCTION BOX PRIOR TO PLACING IN CRATE
ATTACH BOOSTER PUMP ASSEMBLY TO BOTTOM OF CRATE USING HEX BOLT/WASHER
SHORE PUMP TO KEEP FROM SHIFTING OR MOVEMENT INSIDE CRATE DURING TRANSIT

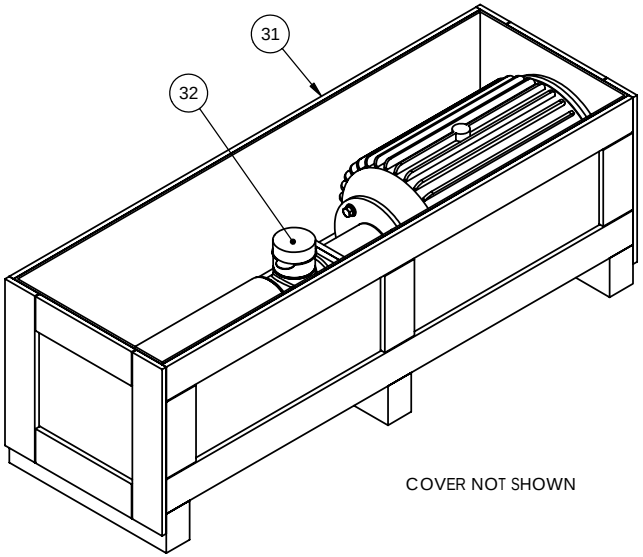

COVER NOT SHOWN

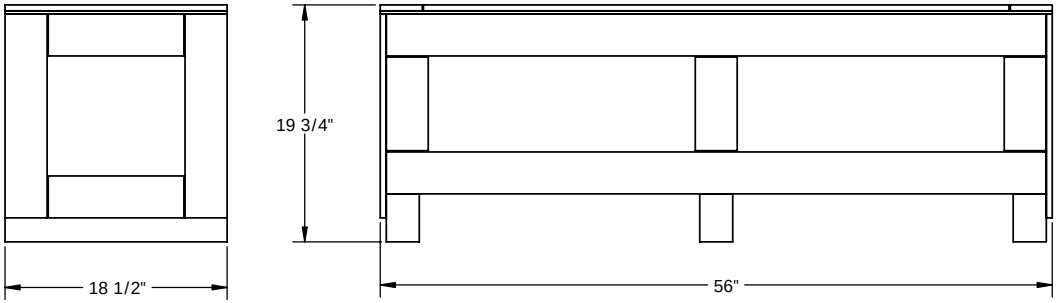

SHIPPING CONFIGURATION

SHIPPING WEIGHT: 430 LBS / 195 Kgs

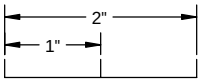

REFERENCE SCALE

INCH

SEE SHEET 1 FOR REVISIONS

ENERGY RECOVERY INC.
1908 Doolittle Drive, San Leandro, CA 94577
Ph. (510)483-7370 / Fax: (510)483-7371
www.energy-recovery.com

PRODUCT

DRAWING STATUS

DRAWN	RAC	05/12/2003
CHECKED	TLS	05/28/2003
ENG APPR.	RLS	05/28/2003

THIRD ANGLE PROJECTION

TITLE: ASSY, PUMP, BOOSTER, HP-2403

SIZE	DWG. NO.	REV
C	50005	1

SCALE: 1:8 | WEIGHT: | SHEET 3 OF 3

1908 Doolittle Dr.
San Leandro, CA
94577, USA
Phone: 510-483-7370
Fax: 510-483-7371

DESCRIPTION

PUMP CURVES
HIGH-PRESSURE BOOSTER PUMP

ENERGY RECOVERY, INC. HP 2402 PX BOOSTER PUMP	REV	BY	CKD	REVISION	DATE
	000	RLS	JPM	Issued for Distribution	11/23/04
SHEET 1 of 1	001	RLS	RBC	revised efficiency curve	7/12/05
DOCUMENT NUMBER 80044-05					
MANUFACTURER ERI					

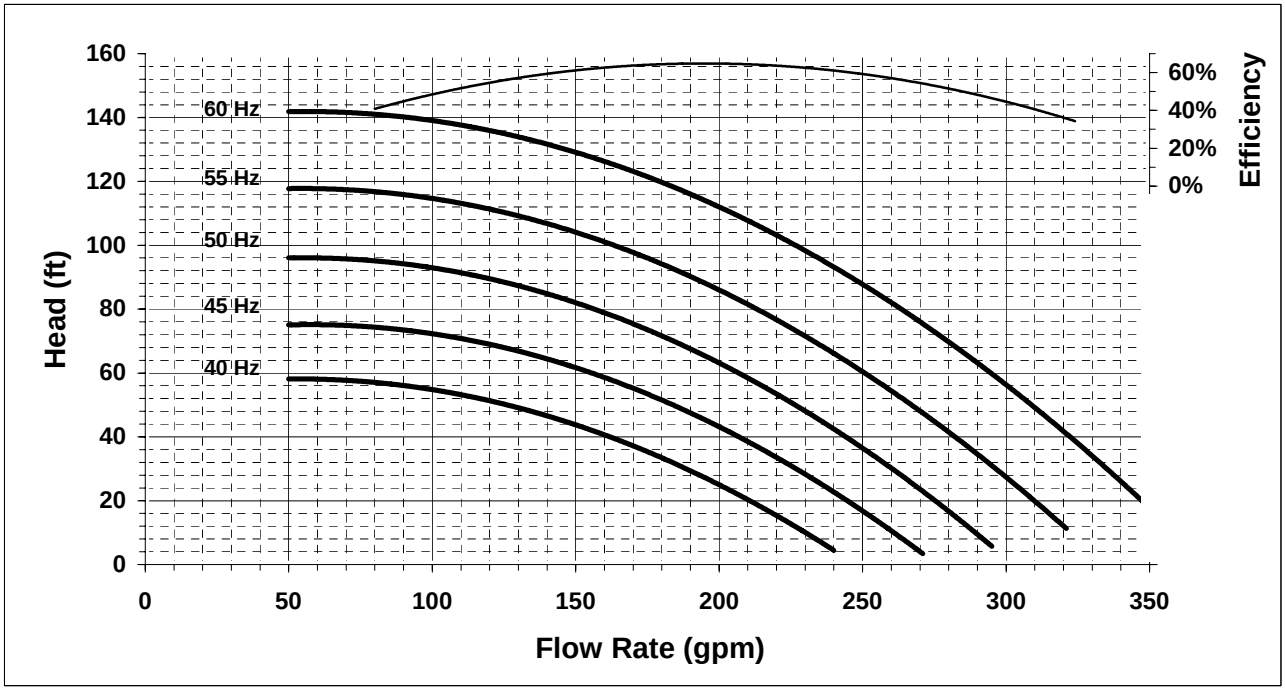

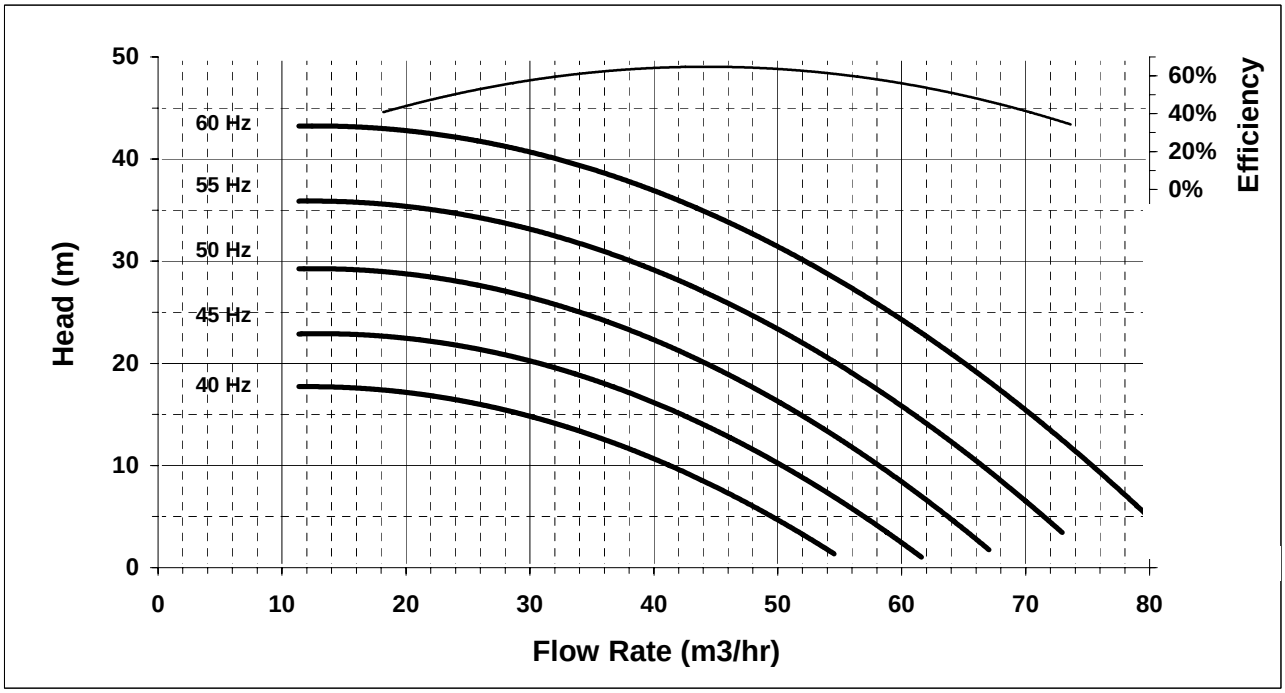

1908 Doolittle Dr.
San Leandro, CA
94577, USA
Phone: 510-483-7370
Fax: 510-483-7371

DESCRIPTION

PUMP CURVES
HIGH-PRESSURE BOOSTER PUMP

ENERGY RECOVERY, INC. HP 1254 PX BOOSTER PUMP	REV	BY	CKD	REVISION	DATE
	000	RLS	JPM	Issued for Distribution	11/23/04
SHEET 1 of 1	001	RLS	RBC	revised efficiency curve	7/12/05
DOCUMENT NUMBER 80044-04					
MANUFACTURER ERI					

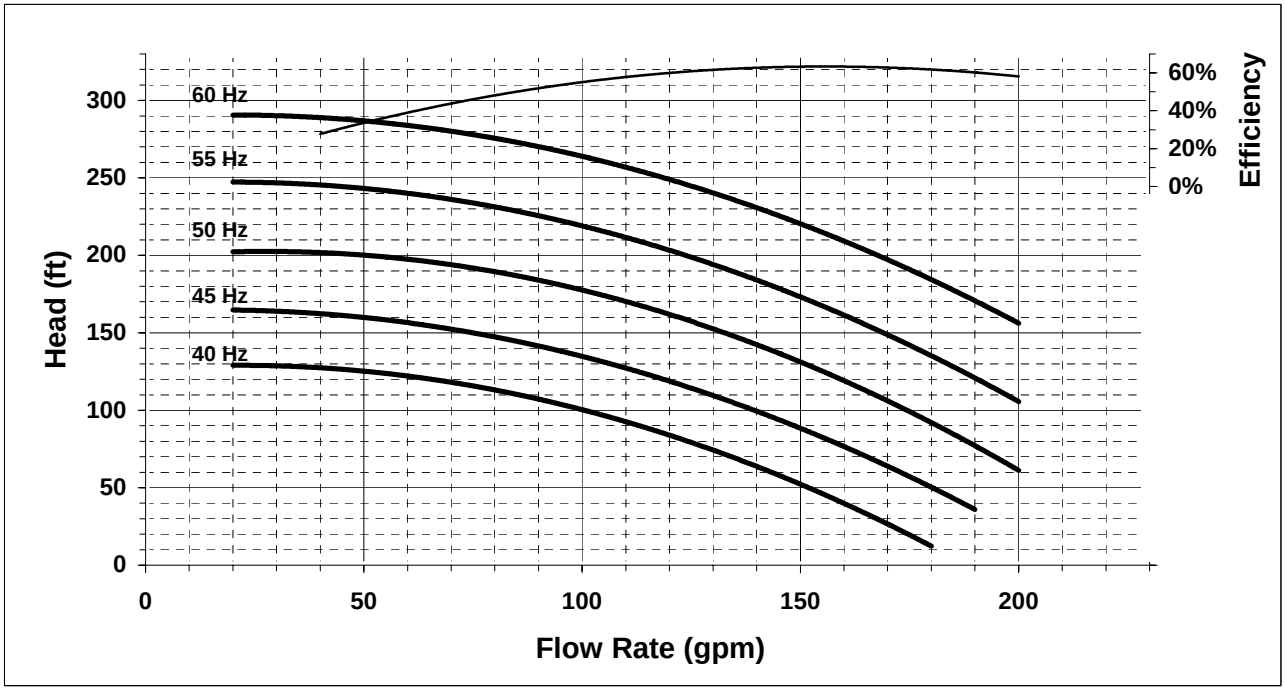

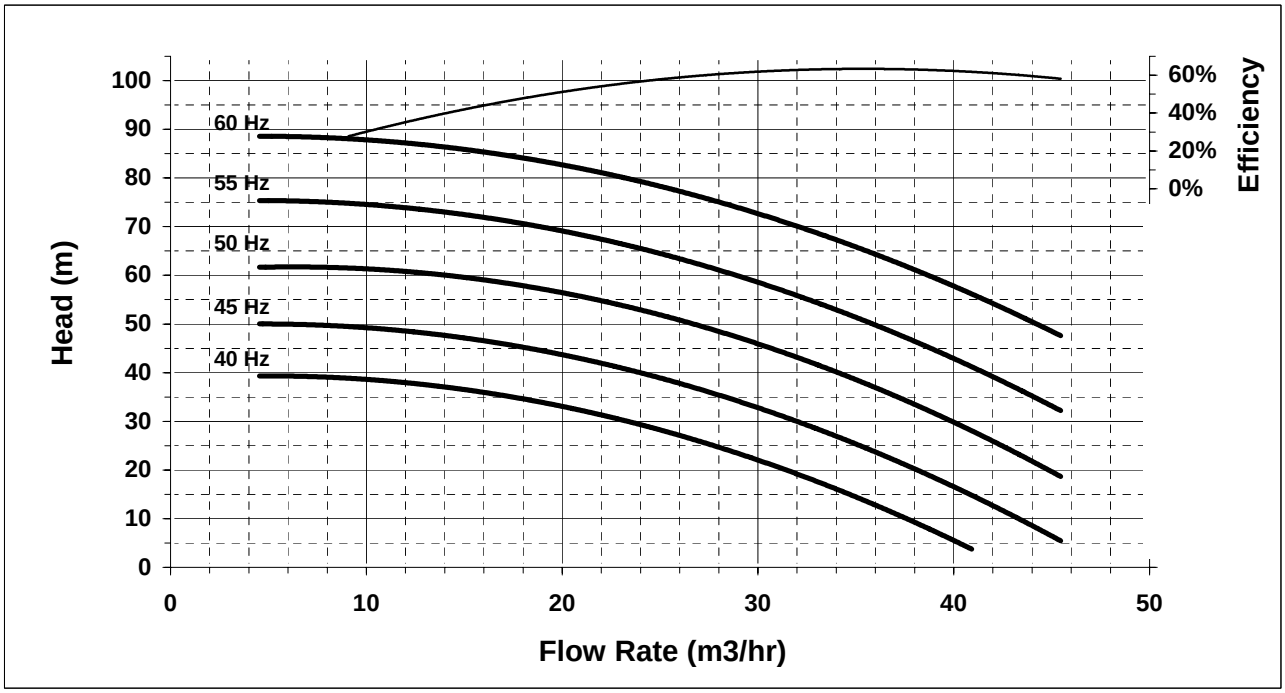

1908 Doolittle Dr.
San Leandro, CA
94577, USA
Phone: 510-483-7370
Fax: 510-483-7371

DESCRIPTION

PUMP CURVES
HIGH-PRESSURE BOOSTER PUMP

ENERGY RECOVERY, INC. HP 1253 PX BOOSTER PUMP	REV	BY	CKD	REVISION	DATE
	000	RLS	JPM	Issued for Distribution	11/23/04
SHEET 1 of 1	001	RLS	RBC	revised efficiency curve	7/12/05
DOCUMENT NUMBER 80044-03					
MANUFACTURER ERI					

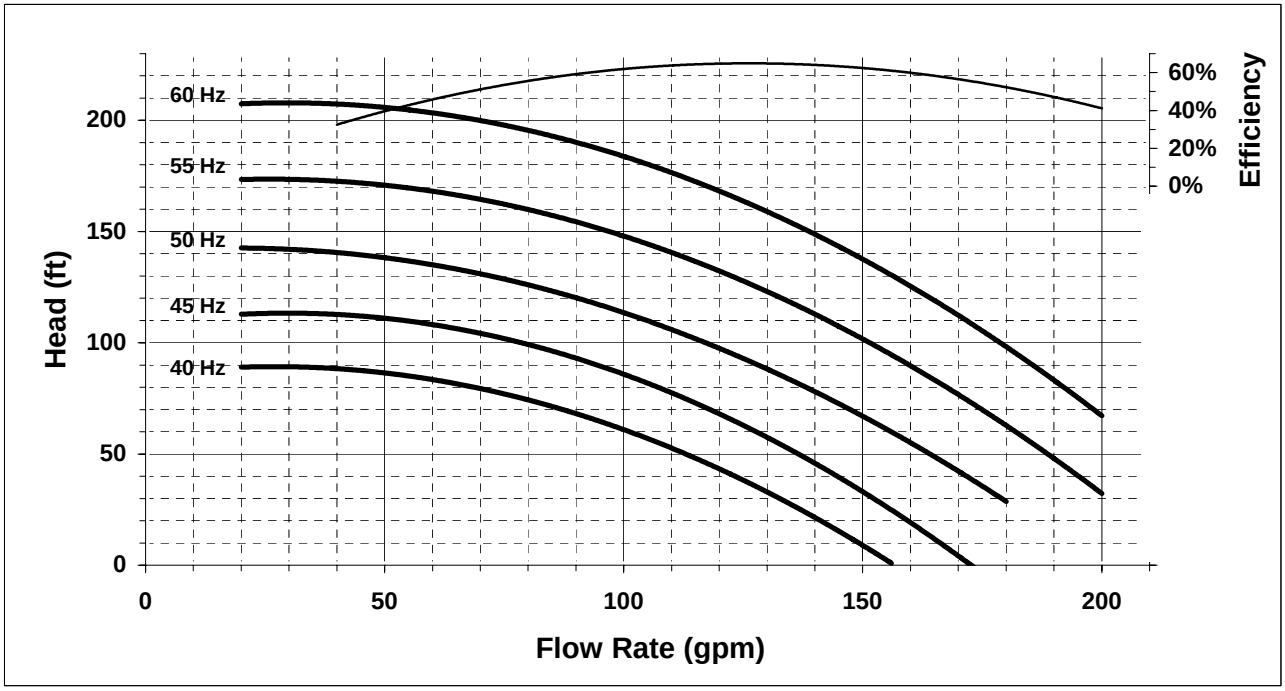

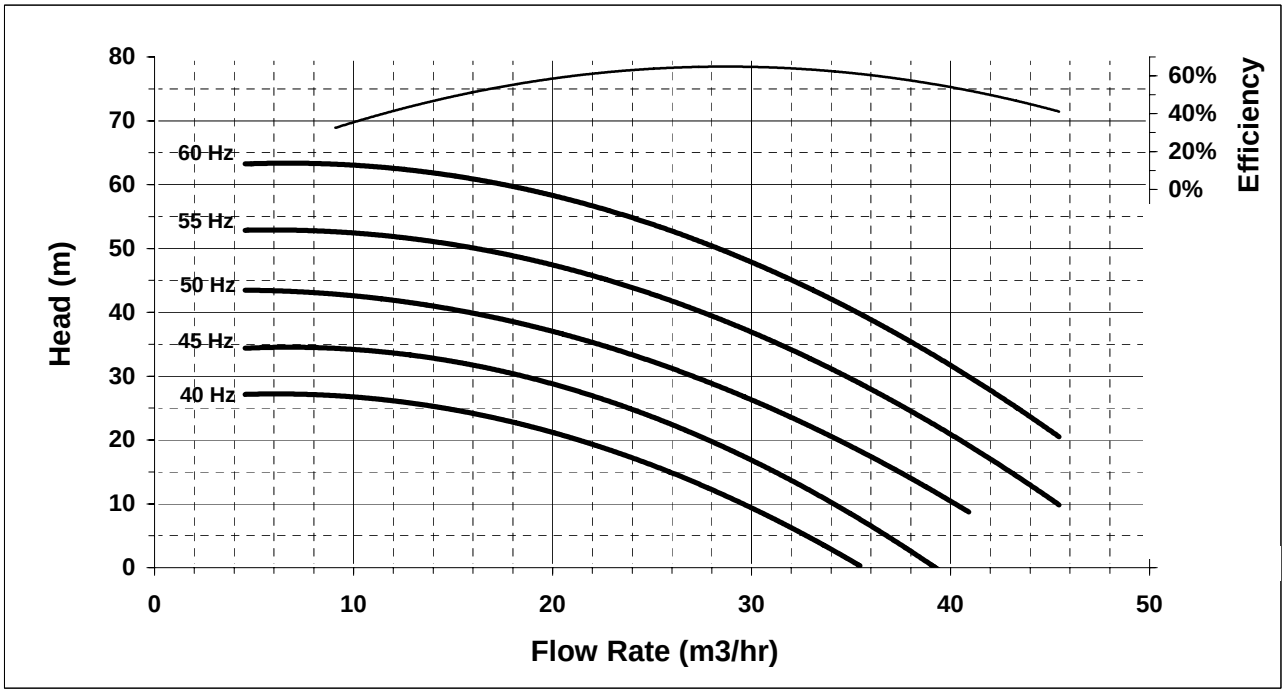

1908 Doolittle Dr.
San Leandro, CA
94577, USA
Phone: 510-483-7370
Fax: 510-483-7371

DESCRIPTION

PUMP CURVES
HIGH-PRESSURE BOOSTER PUMP

ENERGY RECOVERY, INC. HP 8504 PX BOOSTER PUMP	REV	BY	CKD	REVISION	DATE
	000	RLS	JPM	Issued for Distribution	11/23/04
SHEET 1 of 1	001	RLS	RBC	revised efficiency curve	7/12/05
DOCUMENT NUMBER 80044-02					
MANUFACTURER ERI					

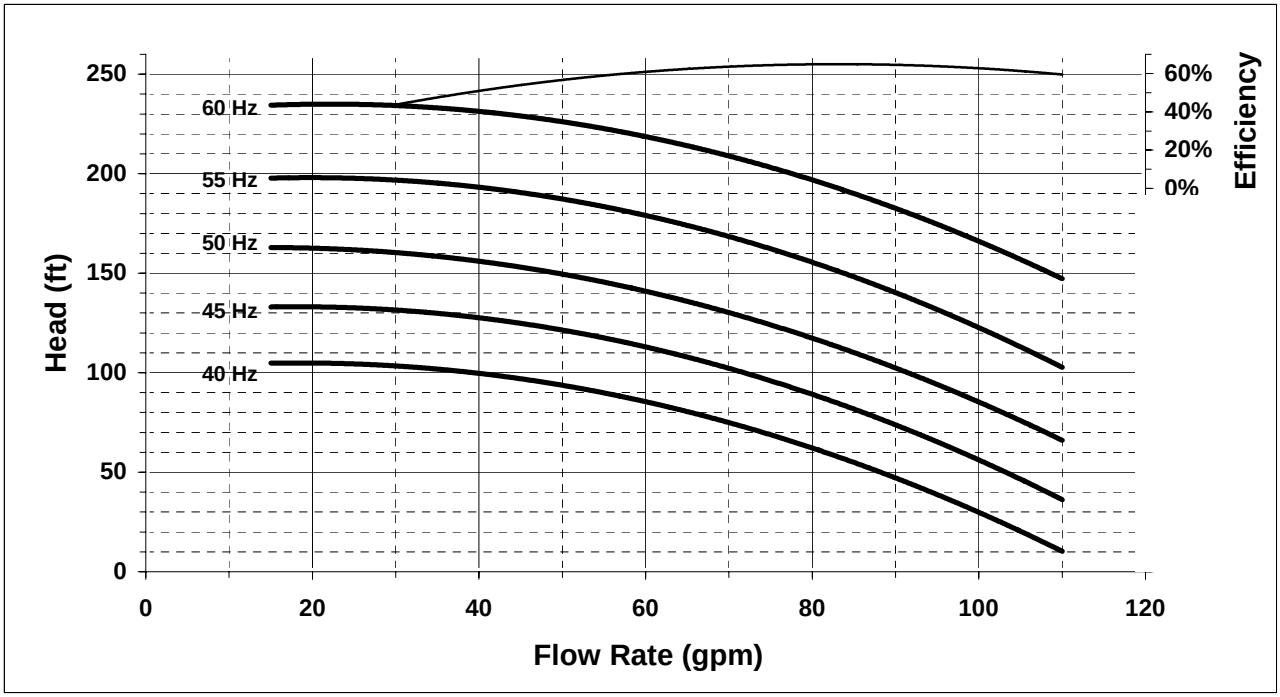

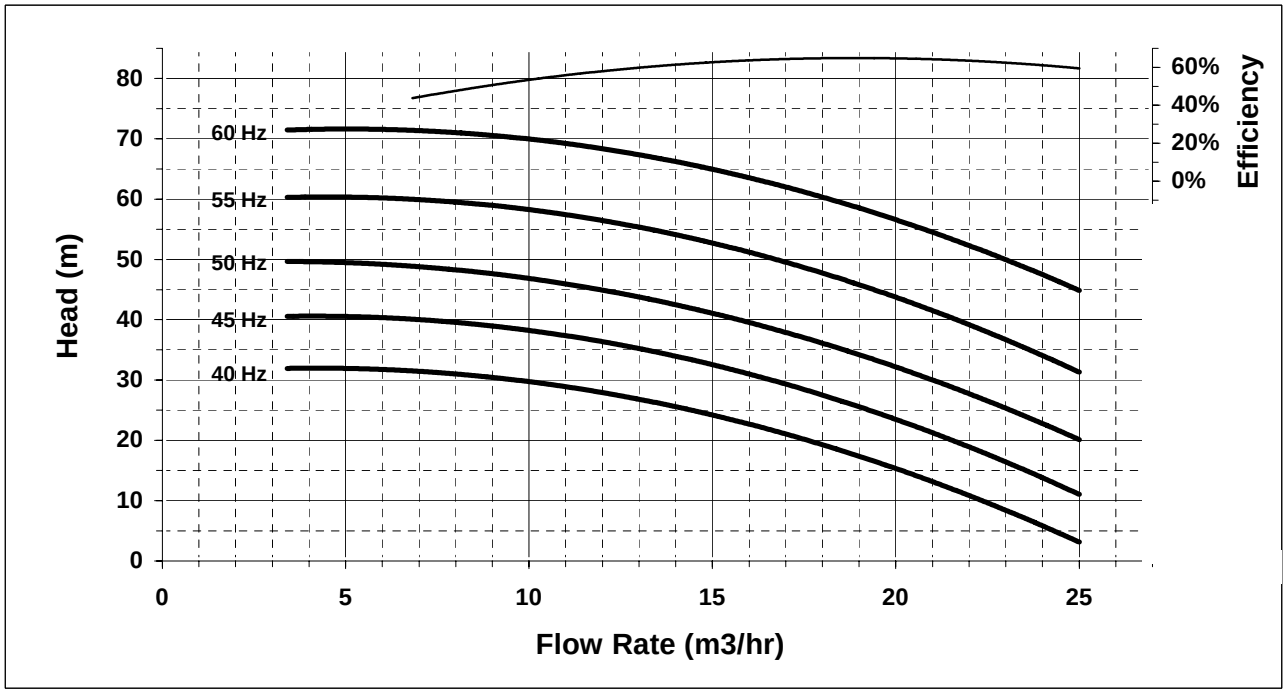

1908 Doolittle Dr.
San Leandro, CA
94577, USA
Phone: 510-483-7370
Fax: 510-483-7371

DESCRIPTION

PUMP CURVES
HIGH-PRESSURE BOOSTER PUMP

ENERGY RECOVERY, INC. HP 8503 PX BOOSTER PUMP	REV	BY	CKD	REVISION	DATE
	000	RLS	JPM	Issued for Distribution	11/23/04
SHEET 1 of 1	001	RLS	RBC	revised efficiency curve	7/12/05
DOCUMENT NUMBER 80044-01					
MANUFACTURER ERI					

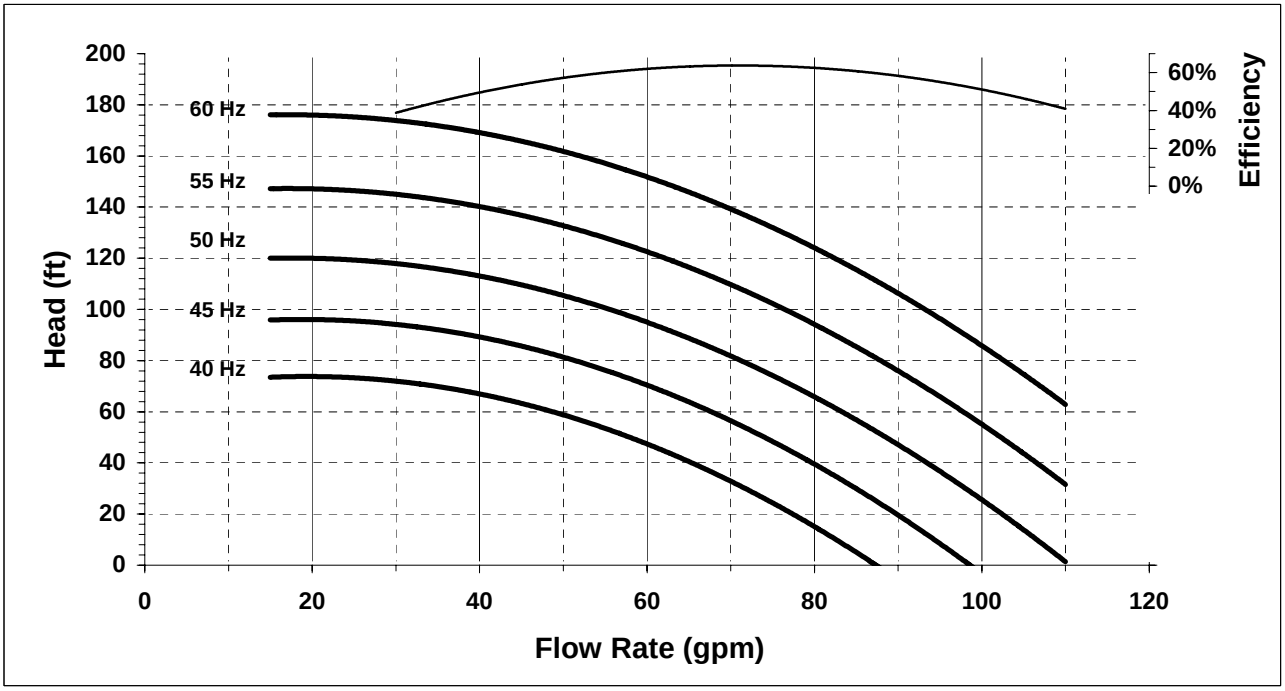

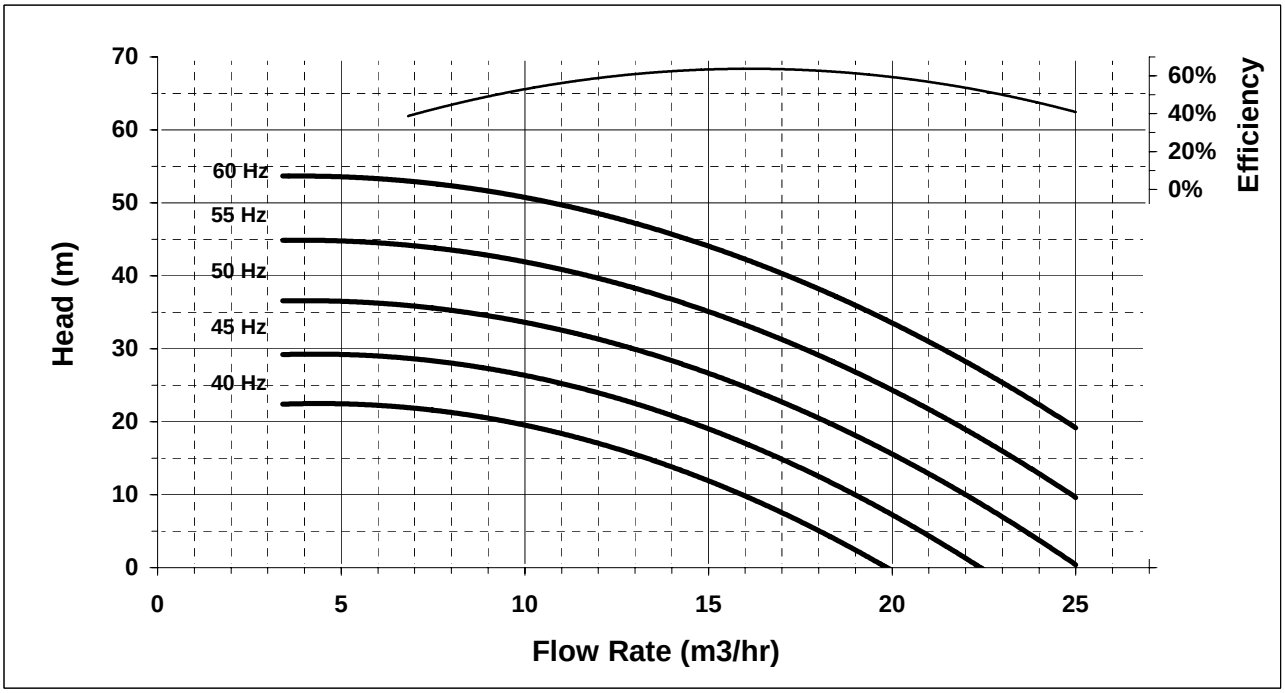

1908 Doolittle Dr.
San Leandro, CA
94577, USA
Phone: 510-483-7370
Fax: 510-483-7371

DESCRIPTION

PUMP CURVES
HIGH-PRESSURE BOOSTER PUMP

ENERGY RECOVERY, INC. HP 2403 PX BOOSTER PUMP	REV	BY	CKD	REVISION	DATE
	000	RLS	JPM	Issued for Distribution	11/23/04
SHEET 1 of 1	001	RLS	RBC	revised efficiency curve	7/12/05
DOCUMENT NUMBER 80044-06					
MANUFACTURER ERI					

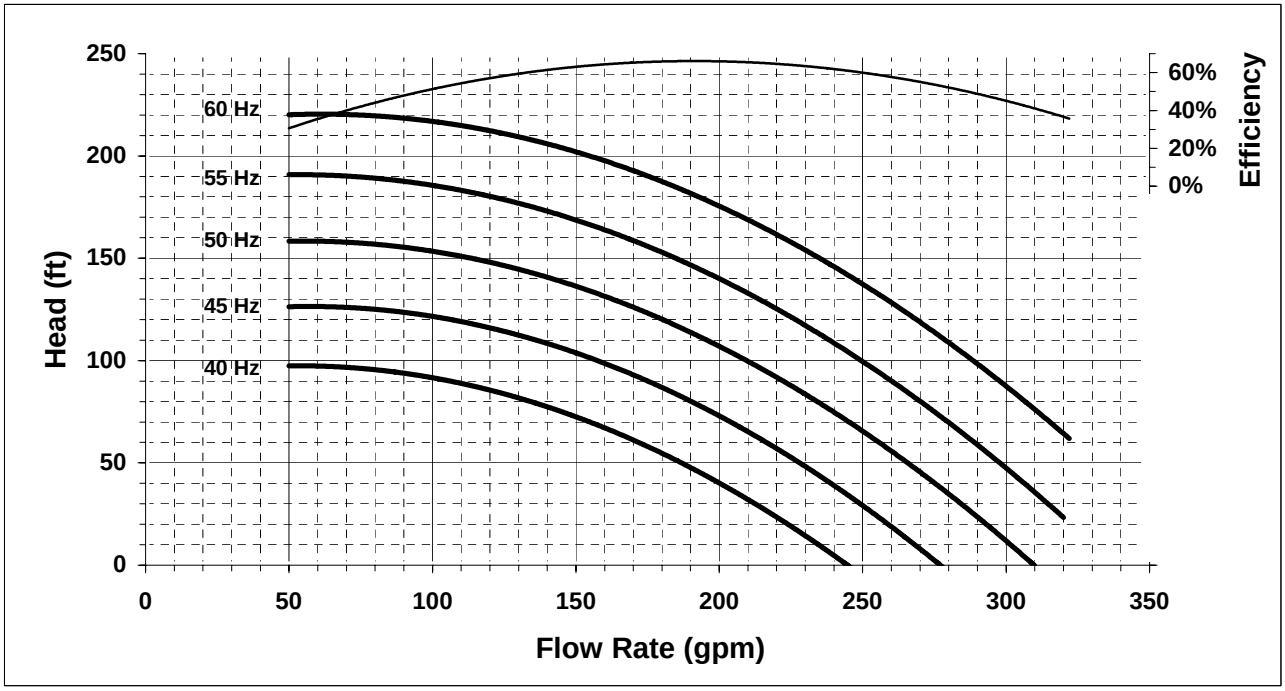

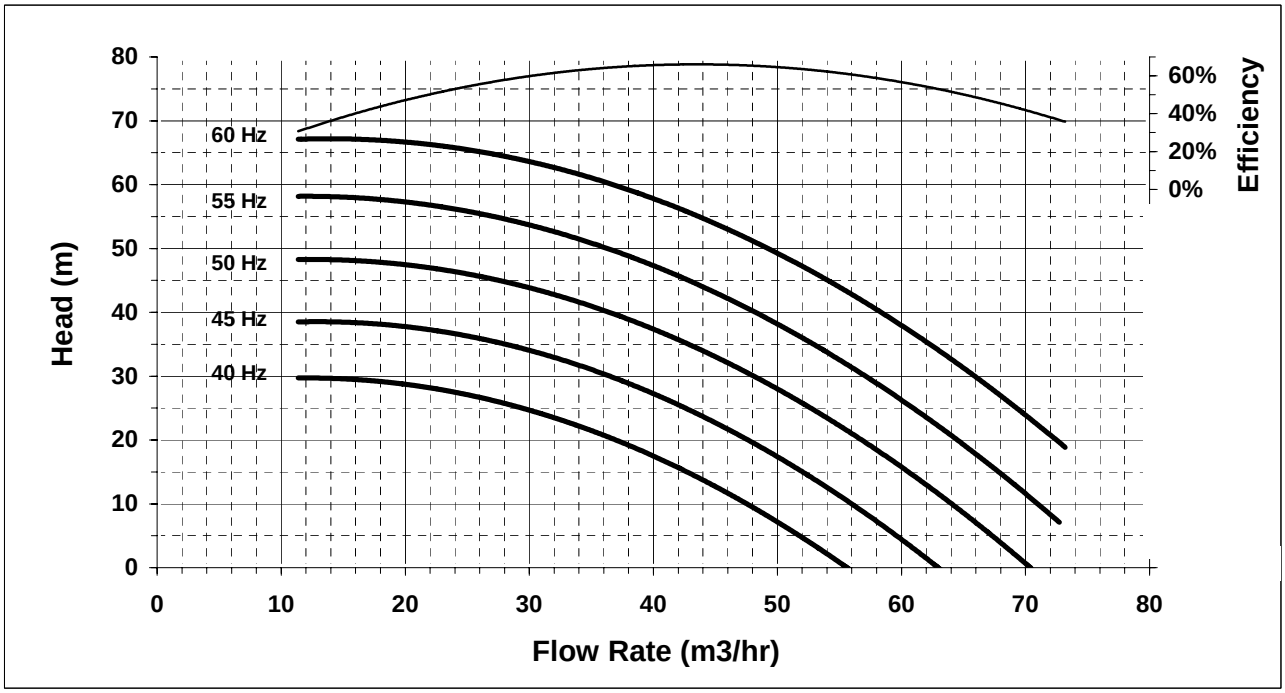

MATERIAL FLOW DIAGRAM

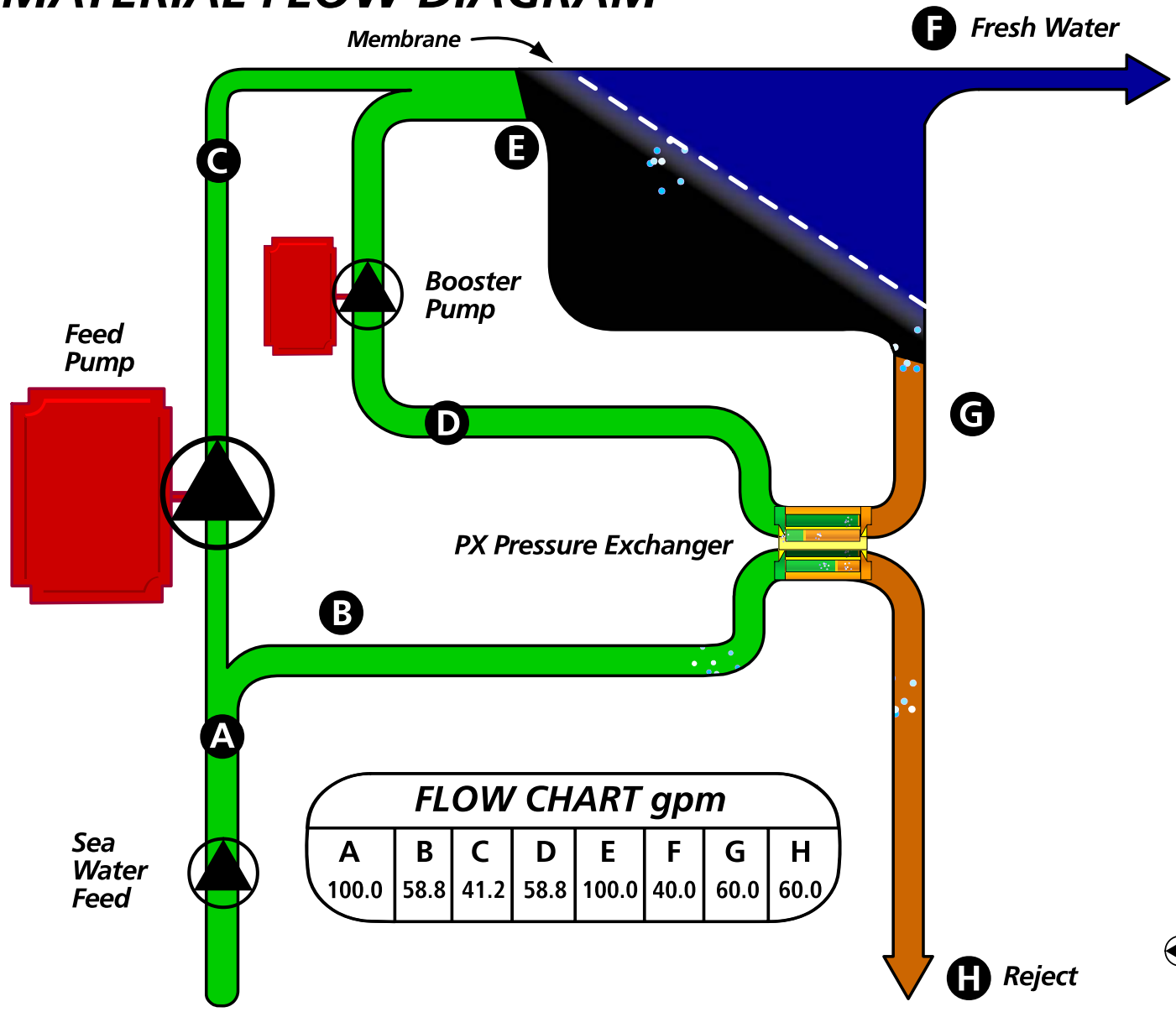

FLOW CHART gpm

A	B	C	D	E	F	G	H
100.0	58.8	41.2	58.8	100.0	40.0	60.0	60.0

Back

25/8/2005

PX System Analysis

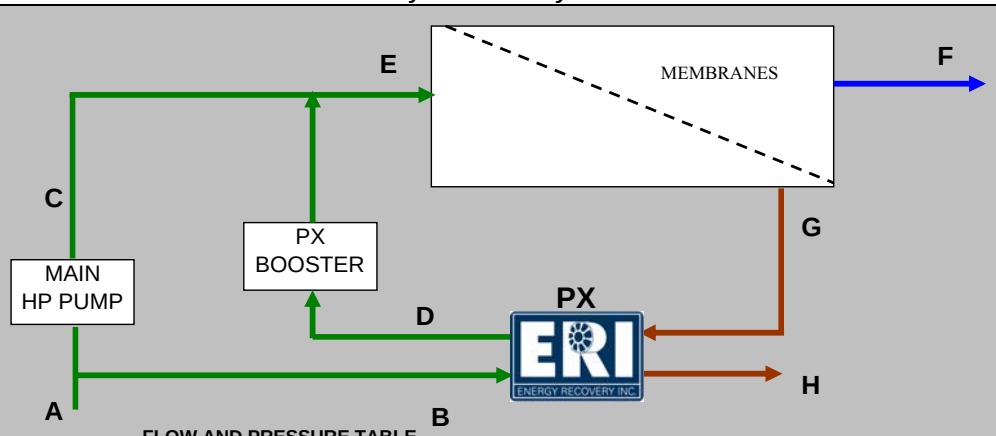

FLOW AND PRESSURE TABLE

		A	B	C	D	E	F	G	H
FLOW	US gpm	399	209	190	209	399	183	215	215
	m^3/hr	90,6	47,5	43,1	47,5	90,6	41,7	48,9	48,9
	m^3/day	2.174	1.140	1.034	1.140	2.174	1.000	1.174	1.174
PRESSURE	psi	27	27	943	903	943	0	914	15
	Bar	1,8	1,8	65,0	62,3	65,0	0,0	63,0	**1,0**
QUALITY	n/a	SEA	SEA	SEA	SEA	SEA	PERM	BRINE	BRINE

PX PERFORMANCE

PX model	n/a	PX-140S
Number of units	n/a	2
PX unit flow	m3/hr	24,5
PX lubricant per array	m3/hr	1,4
PX differential HP side	bar	0,7
PX differential LP side	bar	0,8
PX efficiency	%	94,9%
Operating capacity	%	77%

HIGH PRESS. PUMP POWER

HP pump efficiency	69%	
Motor efficiency	92%	
Power	kW	120,0

PX BOOSTER PUMP POWER

PX booster efficiency	64%	
Motor Efficiency	91%	
Power	kW	6,2

SEA WATER FEED PUMP	kW	0,0

INPUT DESCRIPTIONS **INPUTS**

Units Metric or English	M or E	**m**
Manual or auto efficiencies	m or a	**a**
Permeate flow	m3/day	**1.000**
RO recovery rate	%	**46%**
RO feed pressure	bar	**65,0**
Membrane DP	bar	**2,0**
Main HP Pump efficiency	%	
Main HP Pump motor efficiency	%	
PX Booster efficiency	%	
PX booster motor efficiency	%	
PX design margin	%	

PX SYSTEM POWER RESULTS

Total RO process (kW)	126,2
kWh/m^3 permeate	3,03
kWh/Kgal permeate	11,5

Power savings per year @ $0.10/kWh	$ 110.491

Warnings	**NONE**
Suggestions	**NONE**

Notes:

PX vs Turbo Charger Power Analysis

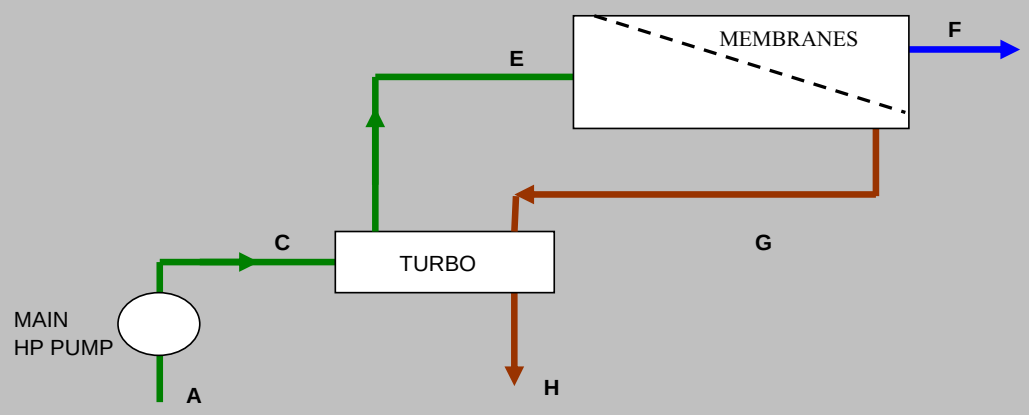

FLOW AND PRESSURE TABLE

		A	C	E	F	G	H
FLOW	US gpm	399	399	399	183	215	215
	m^3/hr	90,6	90,6	90,6	41,7	48,9	48,9
	m^3/day	2.174	2.174	2.174	1.000	1.174	1.174
PRESSURE	psi	27	641	943	0	914	15
	bar	1,8	44,2	65,0	0,0	63,0	1,0
QUALITY	n/a	SEA	SEA	SEA	PERM	BRINE	BRINE

TURBO, PUMP, AND MOTOR EFFICIENCIES

Turbo net transfer efficiency	%	**62%**
Main HP pump efficiency	%	**72%**
Motor efficiency	%	**92%**

POWER CALCULATIONS

Turbo shaft power	HP	70,1
Turbo pump boost	psi	301,5
Main HP pump shaft power	kW	148,9
Main HP pump motor power	kW	162,0

SEA WATER FEED PUMP	kW	0,0

MEMBRANE PARAMETERS

Recovery	%	46%
Membrane differential	PSI	29

TURBO SYSTEM POWER RESULTS

Total power (kW)	162,0
kWh/m^3 permeate	3,89
kWh/Kgal permeate	14,7

PX SAVINGS CALCULATIONS

PX vs turbo power savings kWh/m3	0,86
PX savings over the turbo %	22%
Savings per year @ $0.10/kWh	$ 31.396

Notes:

PX vs Pelton Power Analysis

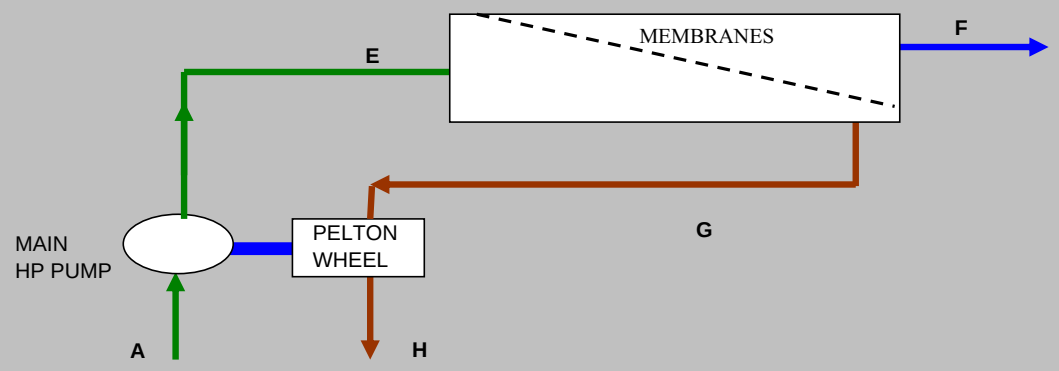

FLOW AND PRESSURE TABLE

		A	E	F	G	H
FLOW	US gpm	399	399	183	215	215
	m^3/hr	90,6	90,6	41,7	49,0	49,0
	m^3/day	2174	2174	1000	1174	1174
PRESSURE	psi	27	943	0	914	0
	Bar	1,8	65,0	0,0	63,0	0,0
QUALITY	n/a	SEA	SEA	PERM	BRINE	BRINE

TURBO, PUMP, AND MOTOR EFFICIENCIES

Pelton efficiency	%	**82%**
Main HP pump efficiency	%	**72%**
Motor efficiency	%	**92%**

POWER CALCULATIONS

Pelton shaft power	kW	70,2
Main HP pump shaft power	kW	222,1
Motor shaft power	kW	151,8
Motor electrical power	kW	165,2

SEA WATER FEED PUMP	kW	0,0

MEMBRANE PARAMETERS

Recovery	%	46%
Membrane differential	PSI	29

PELTON SYSTEM POWER RESULTS

Total power (kW)	165,2
kWh/m^3 permeate	3,96
kWh/Kgal permeate	15,0

PX SAVINGS CALCULATIONS

PX vs Pelton power savings kWh/m3	0,93
PX savings over the Purbo %	24%
Savings per year @ $0.10/kWh	$ 34.082

Notes:

Energy Recovery, Inc.
1908 Doolittle Dr.
San Leandro, CA
94577, USA
Tel: 510-483-7370
Fax: 510-483-7371

PERFORMANCE CURVES DEFINITIONS, PRESSURE EXCHANGER

Efficiency: Energy transfer efficiency in the Pressure Exchanger as calculated with the following equation:

$$Efficiency = \frac{\sum (Pressure \times Flow)_{OUT}}{\sum (Pressure \times Flow)_{IN}} \times 100 \%$$

High Pressure Flow Differential Pressure (HP DP): The pressure at the high-pressure inlet port of the PX minus the pressure at the high-pressure outlet.

Low Pressure Flow Differential Pressure (LP DP): The pressure at the low-pressure inlet port of the PX minus the pressure at the low-pressure outlet.

Mixing: Contact ERI for specific mixing data and performance sheets.

Test Conditions: Pressure Exchanger performance data collected in ERI's wet test facility in San Leandro, California.

Water: 100 ppm TDS, 65 degF / 18 degC (tap water)
Differential Pressure: data collected at 1,000 psi / 69 bar high-pressure inlet, 30 psi / 2 bar low-pressure inlet
Lubrication: data collected at maximum rated flow rate

PX-45S/PX-70S/PX-90S

The PX-45S/PX-70S/PX-90S units are ideal for medium size RO systems typically from 150-350 m3/day depending on recovery. They are often used in parallel to service larger systems. They have only one moving part and require little to no maintenance.




Why Buy ERI?

The Most Savings

ERI saves its clients significant money compared to older energy recovery technologies such as Pelton wheels, Francis turbines and turbo chargers.

- Saving clients over $35,000,000 per year
- Up to 97% efficient
- Power consumption as low as 2.0 kWh/m3

Experience and Proven Reliability

ERI has 10-30 times more experience than the next manufacturer of isobaric energy recovery devices by every measure, including installed capacity, number of installations, and single train size.

- 10,000,000 unit hours of proven reliability
- Nearly 1000 units installed worldwide
- 275,000 m3/day of installed capacity
- Nearly 300 independent reference plants
- 10,000 m3/day trains operating for more than 2 years
- Standard 2 year warranty

Simple Design

The PX offers the simplest approach to isobaric energy recovery available today; Only one moving part with no seals, packing, oil or wear parts to change. There is no scheduled maintenance associated with PX technology, which is why the PX has the lowest life cycle costs of any advanced energy recovery device.

- No pulsations
- No valves, pistons, timers or electronic controls
- No over flush
- No maintenance
- 1 moving part
- Totally field serviceable

PX-45S/PX-70S/PX-90S

Materials:

Ceramic, and PVC internal components
Fiberglass Reinforced Plastic (FRP) pressure vessel housing
254 SMO®, AL-6XN®, Zeron 100® or equivalent high-pressure fittings
Victaulic® connections for easy installation.

Victaulic® is a trademark of Victualic Company of America. AL-6XN® is a trademark of Allegheny Ludlum Corporation. 254 SMO® is a trademark of Avest Sheffield AB. Zeron 100® is a trademark of Weir Materials, Ltd

Specification:

Model	USgpm	Interface Connections (inches)				Shipping Dims (inches)	Gross Weight (pounds)
		(LP In)	(LP Out)	(HP In)	(HP Out)		
PX-45S	25-45 (5.9-10.2)	1.5	1.5	1.5	1.5	30x13x11	52
PX-70S	40-70 (9.1-15.9)	1.5	1.5	1.5	1.5	30x13x11	52
PX-90S	60-90 (13.6-20.4)	1.5	1.5	1.5	1.5	30x13x11	52

inches(mm):

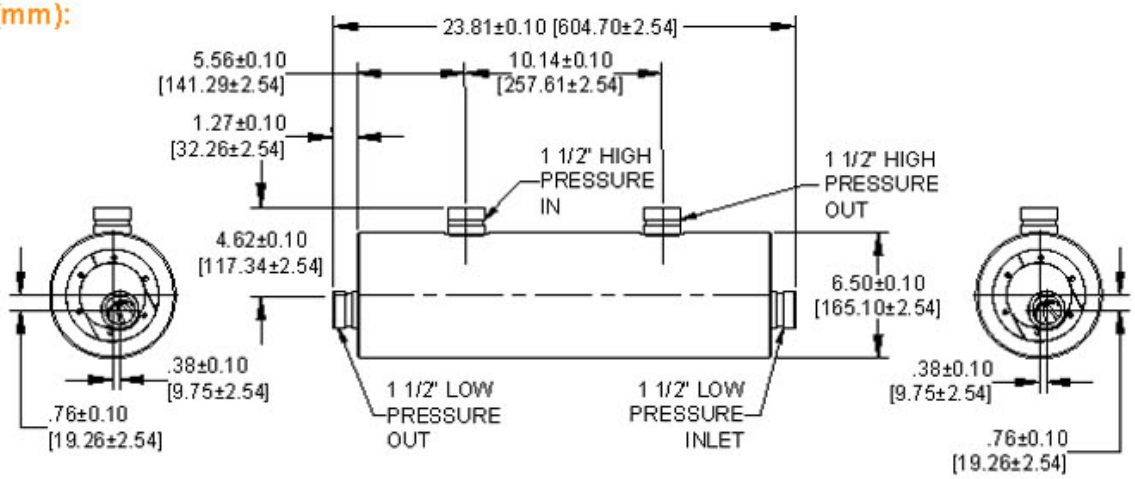

Important Information:

The flow through PX unit must never exceed the max. rated flow
Any flow can be achieved by arranging the same model of multiple units in parallel

Note:

Information and specification above are subject to change without prior notice. Please contact ERI for current information and specification.

Energy Recovery, Inc
Office: 00-1-510-483-7370
China Cell: 13750835025
Fax:00-1-510-483-7371

E-mail: sales@energy-recovery.com
Web: www.energyrecovery.com
www.energyr-ecovery.com
Making Desalination Affordable

Energy Recovery, Inc.
1908 Doolittle Dr.
San Leandro, CA
94577, USA
Phone: 510-483-7370
Fax: 510-483-7371

PERFORMANCE CURVES PX-90S PRESSURE EXCHANGER

Doc. No.	80034-01
Sheet No.	1 of 1

REV	BY	CKD	REVISION	DATE
000	RLS	JPM	Issued for Distribution	7/7/04

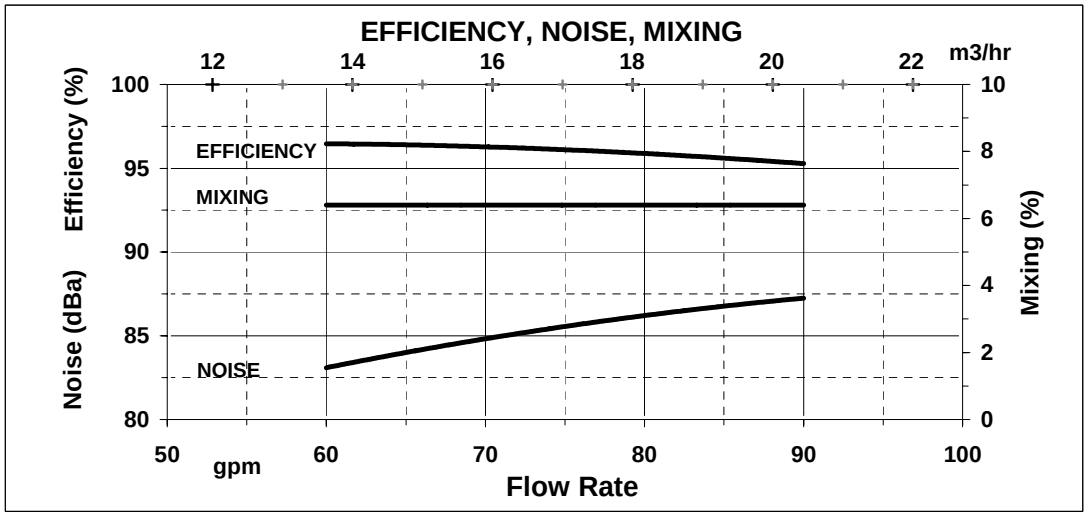

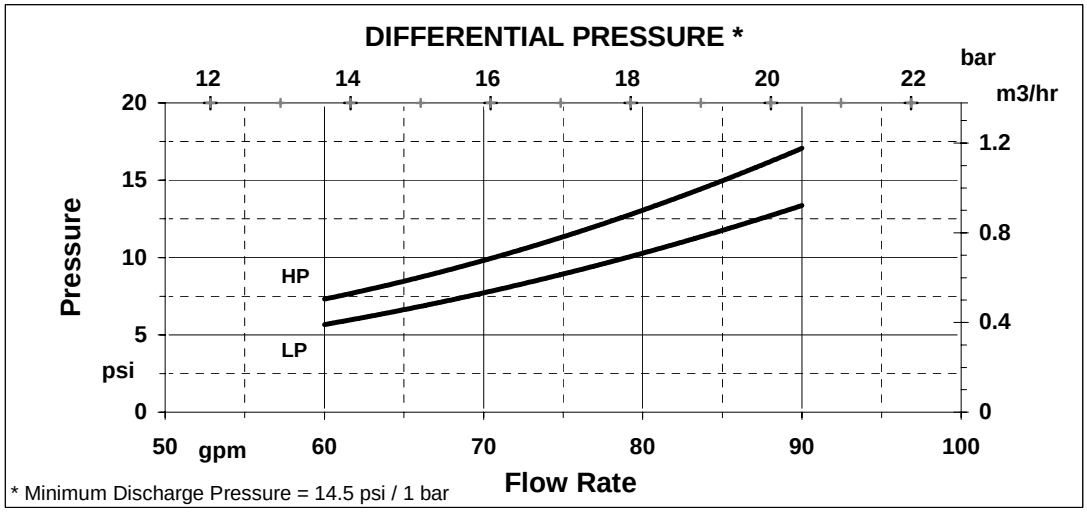

* Minimum Discharge Pressure = 14.5 psi / 1 bar

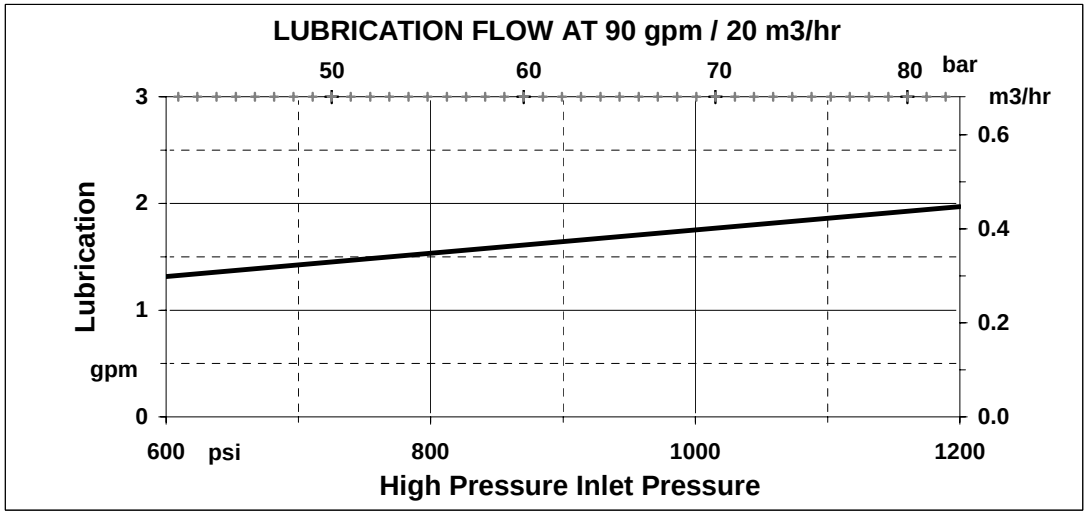

NOTE: SEE ERI DOCUMENT NUMBER 80008-01 FOR DEFINITIONS AND TEST CONDITIONS

1908 Doolitle Dr.
San Leandro, CA
94577, USA
Phone: 510-483-7370
FAX: 510-483-7371

Energy Recovery, Inc. Pressure Exchanger PX - 90

SHEET 1 of 1

Document Number 80003-01

MANUFACTURER ERI

REV	BY	CKD	REVISION	DATE
0	RBC	RLS	Issued for distribution	3/30/2004

DESCRIPTION:

TECHNICAL DATA SHEET, POSITIVE DISPLACEMENT ENERGY RECOVERY DEVICE

1. Tag: | 2. Service: | 3. Reference:

4	OPERATING CONDITIONS	Liquid	**Seawater**
5		Operating Temperature	**33°F-113°F (0.6-45°C)**
6		Max Temperature	**113°F (45°C)**
7		Specific Gravity	**1025.18 kg/cu.m**
8		Vapor Pressure [psia]	**water=1.0 @ 100°F**
9		Viscosity (cP)	**1.060 cP @ 70°F**
10		High Pressure Inlet Max. Rated Flow [gpm]	**90 gpm (20.4m3/hr)**
11		Low Pressure Outlet Max. Rated Flow [gpm]	**90 gpm (20.4m3/hr)**
12		Rated Max. High Pressure [psig]	**1200 psig (82.7 bar)**
13		Rated Max. Low Pressure [psig]	**150 psig (10.3 bar)**
14		Maximum High Pressure Suction [psig]	**1200 psig (82.7 bar)**
15		Minimum Low Pressure Suction [psig]	**29 psig (2 bar)**
16		Minimum Discharge Pressure (MDP)	**14.5 psig (1 bar)**
17	PERFORMANCE	Peak Effiency [%]	**95%**
18		High Pressure Flow Differential [psig]	**10 psig @ 90 gpm(20.4m3/hr)**
19		Low Pressure Flow Differential [psig]	**7.5 psig @ 90 gpm(20.4m3/hr)**
20		Maximum Lubrication Flow [gpm]	**3.25 gpm (0.74m3/hr)**
21		Maximium Speed [rpm]	**1400 rpm**
22		Salinity Increase at Membranes at 40% Recovery	**2-3%**
23		Maximun Noise Allowable [dBA]	**87.5 dBA**
24			
25			
26	MATERIALS	Vessel/ Housing	**GRP**
27		Rotor, Sleeve, Endcover Assembly	**Ceramics-alumina**
28		*Low Pressure Inlet Port Fitting	***AL-6XN**
29		*Low Pressure Outlet Port Fitting	***AL-6XN**
30		*High Pressure Inlet Port Fitting	***AL-6XN**
31		High Pressure Outlet Port Fitting	**254SMO**
32		Internal Low Pressure Nipple/Manifolds	**PVC/GRP**
33		Fasteners/Hardware (non-wetted)	**316SS**
34		*Tension Rod Assembly	**C-276 / *AL-6XN**
35		O-rings	**EPDM**
36	PIPING CONNECTIONS	Low Pressure Inlet Port Fitting	**1-1/2" flexible type (2)**
37		Low Pressure Outlet Port Fitting	**2" flexible type**
38		High Pressure Inlet Port Fitting	**2" flexible type**
39		High Pressure Outlet Port Fitting	**2- 1-1/2" flexible type (2)**
40			
41			

42	TEST	Manufacturer's Std.	■ Yes	☐ No
43		Performance	■ Yes	☐ No
44		Case Hydrotest	☐ Yes	■ No
45		Dismantle and Inspection	☐ Yes	■ No
46		Cavitation Test	■ Yes	☐ No
47		Vibration Test	■ Yes	☐ No
48		Witnessed Test	■ Yes	☐ No
49				
50	INSPECTIONS	Piping Dimensions	■ Yes	☐ No
51		Port Connections	■ Yes	☐ No
52		Vessel Housing Dimensions	■ Yes	☐ No
53		Ceramic Dimensions	■ Yes	☐ No
54				
55				
56				
57				
58				
59				
60	SHIPPING WEIGHT & DIMENSIONS	Shipping Dimensions		
61		Shipping Weight	**105 lbs. (47.6 kgs.)**	
62		Cartridge Weight		
63		Cartridge Shipping Dimensions		
64		Spare Parts Kit Weight		
65		Spare Parts Kit Dimensions		
66		Tool Kit Weight		
67		Tool Kit Dimensions		
68				
69	MISCELLANEOUS			
70				
71				
72				
73				
74				
75				
76				
77				
78				
79				

***AL-6XN is a registered trademark of Allegheny Ludlum**

ERI RESERVES THE RIGHT TO MAKE SPECIFICATION CHANGES AT ANY TIME WITHOUT PRIOR NOTICE.

PRICE: **sales@energy-recovery.com**	SHIPPING:	DELIVERY:
MANUFACTURER: **Energy Recovery, Inc.**	MODEL NO. **PX-90**	WEIGHT: **90 lbs.**

5. OSMOSE REVERSA – VASOS E MEMBRANAS

8" Membrane Housings

CodeLine 8" membrane housings offer long-lasting performance for high-pressure water separation applications. With a variety of End Port, Side Port, and Multi Port options to choose from, CodeLine has a vessel that's sure to meet your needs.

Ultra-pure and sanitary packages available

Specialized Advantages

Easier and less costly to install - Exclusive Multi-Port feature (80A Series only) allows vessels to be linked together without costly manifolds.

Quick Lock System™- Allows you to access membranes in seconds saving time and money.

Superior impact and corrosion resistance - Composite construction makes the difference.

Mirror-finish ID -Yields a precision bore and prevents biofouling.

Fiberglass fail-safe shell -Enables vessels to weep, preventing catastrophic failure.

Side Port & Multi Port Benefits - 80A Series

Reduced costs - Side Port feed and CodeLine's exclusive Multi Port design allow for vessel-to-vessel connection, eliminating the need for costly manifolds.

Greater flexibility - Multiple port options allow for a variety of system configurations.

Easy membrane access - One-piece head design and Quick Lock System™ provide quick and easy membrane access.

Simplified design - With fewer parts, the 80A Series is easier to install and service.

Exclusive Multi Port feature allows for vessel-to-vessel connection, eliminating costly manifolds.

End Port

End Port Specifications

Model Number	Drawing Number	Design Operating Pressure	Maximum Operating Temperature	Qualification Pressure	Element Length
80E30	99111	300 psi / 20 Bar	120° F / 49° C	1800 psi / 124 Bar	1 - 7
80E45	99112	450 psi / 31 Bar	120° F / 49° C	2700 psi / 186 Bar	1 - 7
80E60	99109	600 psi / 41 Bar	120° F / 49° C	3600 psi / 248 Bar	1 - 7
80E100	99108	1000 psi / 68 Bar	120° F / 49° C	6000 psi / 413 Bar	1 - 7
80E120	99110	1200 psi / 82 Bar	120° F / 49° C	7200 psi / 496 Bar	1 - 7

(Includes adapters for all 40" nominal membrane connections)

Note: For 8 element length vessels consult factory. Ultra-pure and sanitary packages available.

For detailed drawings, parts list, adapters and components, visit our Web site at www.codeline.com.

Side Port & Multi Port

Side Port & Multi Port Specifications

Model Number	Drawing Number	Design Operating Pressure	Maximum Operating Temperature	Qualification Pressure	Element Length
80A15	519005	150 psi / 10 Bar	120° F / 49° C	900 psi / 62 Bar	1 - 7
80A30	519001	300 psi / 20 Bar	120° F / 49° C	1800 psi / 124 Bar	1 - 7
80A45	519002	450 psi / 31 Bar	120° F / 49° C	2700 psi / 186 Bar	1 - 7
80A60	519013	600 psi / 41 Bar	120° F / 49° C	3600 psi / 248 Bar	1 - 7

(Includes adapters for all 40" nominal membrane connections)

Note: For 8 element length vessels consult factory. Ultra-pure and sanitary packages available.

For detailed drawings, parts list, adapters and components, visit our Web site at www.codeline.com.

Pentair Water

CodeLine™ Pentair Water

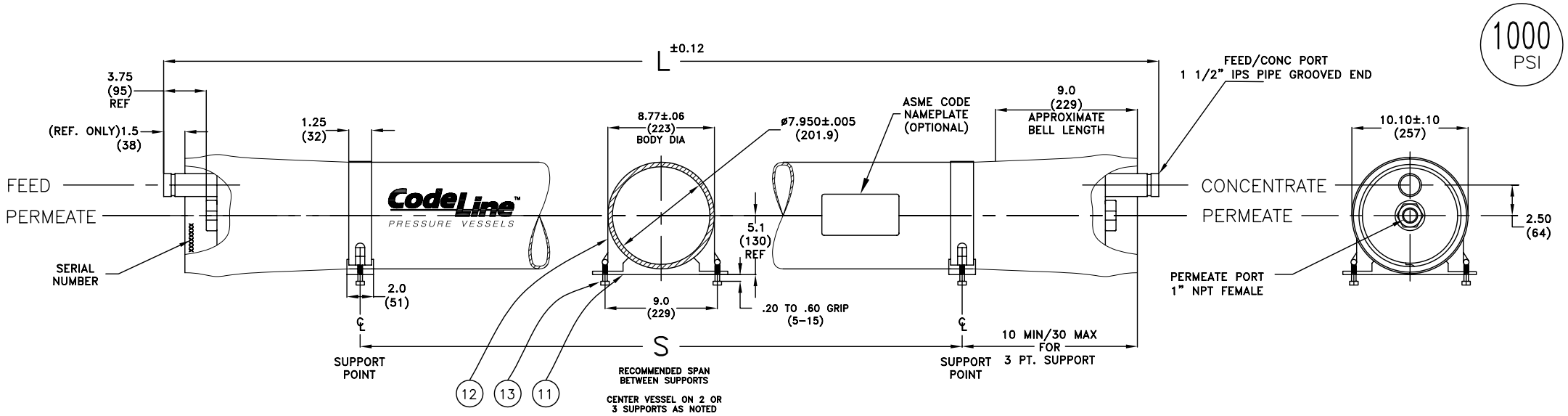

DWG REF	QTY	PART NUMBER	DESCRIPTION	MATERIAL
			SHELL	
01	1	ORDER SECTION	SHELL	Filament Wound Epoxy/Glass composites - SS Head locking grooves integrally wound in place.
			HEAD	
02	2	47317	Bearing Plate	6061-T6 Aluminium Alloy-Hard Anodized.
03	2	96003	Sealing Plate	Engineering Thermoplastic.
04	2	50556	Feed/Conc Port	Superaustenitic Stainless Steel, 6% Mo.
05	2	45090	Port Retainer Set	CF8M Cast SS, Two-piece set.
06	2	50558	Permeate Port	Engineering Thermoplastic.
07	2	45066	Port Nut	Engineering Thermoplastic.
08	2	96000	Head Seal	Ethylene Propylene - O Ring.(442)
09	4	45312	Port Seal	Ethylene Propylene - O Ring.(225)
			HEAD INTERLOCK	
10	2	47336	Retaining Ring	316 Stainless Steel.
			VESSEL SUPPORT	
11	*2	52169	Saddle	Engineering Thermoplastic.
12	*2	45042	Strap Assy.	304 Stainless Steel - PVC cushion
13	4	46265	Strap screw.	5/16-18 UNC, 18-8 Stainless Steel.
			ELEMENT INTERFACE	
14	2	A/R	Adapter	Engineering Thermoplastic.
15	4	A/R	PWT Seal	Ethylene Propylene - O - Ring
16	2	52245	Adapter seal	Ethylene Propylene - O - Ring (124)
17	1	45069	Thrust Ring	Engineering Thermoplastic.
* 3 Each Furnished With Length Code 4, 5, 6 & 7.				

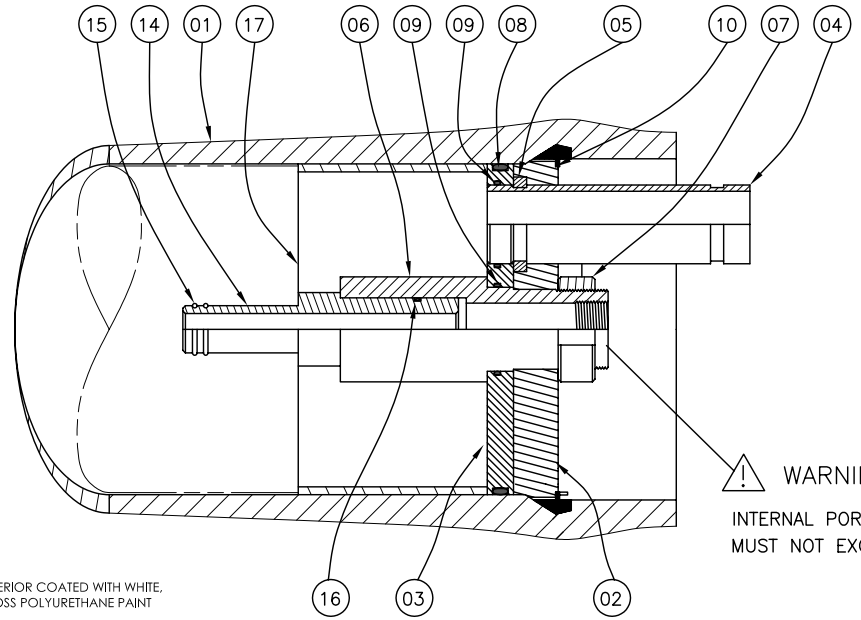

SECTION THROUGH END CLOSURE

ITEM 17 DOWNSTREAM ONLY

WARNING !

INTERNAL PORT PRESSURE MUST NOT EXCEED 125 PSI

NOTES
*SHELL EXTERIOR COATED WITH WHITE, HIGH GLOSS POLYURETHANE PAINT

*DIMENSIONS ARE IN INCHES (MM APPROX.)

*NOT TO BE USED FOR CONSTRUCTION UNLESS CERTIFIED

*GENERAL TOLERANCES APPLY, FOR DETAILS CONTACT FACTORY

*L.O.A REFERS TO OVERALL LENGTH OF THE VESSEL.

*EMPTY WEIGHT REFERS TO SHELL WEIGHT INCLUDING HEAD ASSEMBLIES WITHOUT MEMBRANES.

Shell Length Code	L L.O.A. IN (MM)	S Span IN (MM)	Empty Weight LB (KG)
1	65.125 (1654)	40 X 1 (1016)	75 (34)
2	105.125 (2670)	80 X 1 (2032)	105 (48)
3	145.125 (3686)	120 X 1 (3048)	135 (61)
4	185.125 (4702)	80 X 2 (2032)	165 (75)
5	225.125 (5718)	100 X 2 (2540)	195 (89)
6	265.125 (6734)	120 X 2 (3048)	226 (103)
7	305.125 (7750)	140 X 2 (3556)	256 (116)

CodeLine™ Pentair Water

ENGR IS	MODEL 80E100				
QLTY HP	MEMBRANE HOUSING				
DATE 10MAY02	SCALE	SHEET	SIZE	NUMBER	REV
ECN 697,646	NONE	1 OF 2	B	99108	D

RATING:

DESIGN PRESSURE……...1000 PSI at 120°F (6.89 Mpa @ 49°C)
MIN. OPERATING TEMP……...…….20°F (-7°C)
FACTORY TEST PRESSURE…....CE / ASME 1500 / 1300 PSI (10.3 Mpa) / (8.96 MPa)
BURST PRESSURE……..…….6000 PSI (41.4 MPa)

INTENDED USE:

The CodeLine Model 80E100 Fiberglass RO Pressure Vessel is designed for continuous, long term use as a housing for reverse osmosis membrane elements to desalt typical sea waters at pressures up to 1000 psi. Any make of eight-inch nominal diameter spiral-wound element is easily accommodated; the appropriate interfacing hardware for the element specified is furnished with the vessel.

The CodeLine Model 80E100 is designed in accordance with the engineering standards of the Boiler and Pressure Vessel Code of the American Society of Mechanical Engineers (ASME Code). At small additional cost, vessels can be inspected during construction by an ASME Authorized inspector and ASME Code stamped.

The CodeLine Model 80E100 must be installed operated and maintained in accordance with the listed precautions and good industrial practice to assure safe operation over a long service life.

The high performance reinforced plastic shell must be allowed to expand under pressure; undue restraint at support points or piping connections can cause leaks to develop in the shell. The end closure, incorporating close fitting, interlocking metal components, must be kept dry and free of corrosion; deterioration can lead to catastrophic mechanical failure of the head.

The end closures, incorporating close-fitting, interlocking metal components, must be kept dry and free of corrosion; deterioration can lead to catastrophic mechanical failure of the heads.

Pentair Water will assist the purchaser in determining the suitability of this standard vessel for their specific operating conditions. The final determination however, including evaluation of the standard material of construction for compatibility with the specific corrosive environment, shall be the responsibility of the purchaser.

Specifications are subject to change without notice.

PRECAUTIONS:

DO…read, understand and follow all instructions; failure to take every precaution will void warranty and may result in vessel failure
DO…mount the shell on horizontal members at span "S" using complaint vessel supports furnished; tighten hold down straps just snug
DO…provide overpressure protection for vessel set at not more than 105% of design pressure
DO…inspect end closures regularly; replace components that have deteriorated and correct causes of corrosion

DO NOT… make rigid piping connections to ports or clamp vessel in any way that resists growth of fiberglass shell under pressure; ΔDIA = 0.015 in. (0.4mm) and ΔL = 0.2 in. (5mm) for a length code –7 vessel
DO NOT… hang piping manifolds from ports or use vessel in any way to support other components; branch connection piping may be simply supported between the header and port; maximum weight of branch piping; feed/concentrate – 16 lbs (7.3 kg); permeate – 8 lbs (3.6 kg)
DO NOT… operate vessel at pressures and temperatures in excess of its rating
DO NOT… operate vessel without permeate ports internally connected with a complete set of elements and interconnecting hardware
DO NOT… operate vessel with permeate pressure in excess of 125 psi at 120°F (0.86 MPa @ 49°C)
DO NOT… overtighten the connection to the permeate port (hand-tighten plus one-quarter turn, check for leaks)
DO NOT… tolerate leaks or allow end closures to be routinely wetted in any way
DO NOT… pressurize vessel until double-checking to verify that the retaining ring is completely inside the groove
DO NOT… work on any component until first verifying that pressure is relieved from vessel
DO NOT… operate at pH levels below 3 or above 10

ORDERING:

Using the chart below, please check the features you require and fax them with your purchase order to our customer service department for expedited processing.
For optional materials and/or features not listed below, please consult factory for pricing and availability.

Please note that we require your membrane brand and model number when ordering. If this information is not initially available, you may provide it at a later date by checking the appropriate box below.

VESSEL LENGTH CODE – please check one

MODEL 80E100 ☐ -1 ☐ -2 ☐ -3 ☐ -4 ☐ -5 ☐ -6 ☐ -7

MEMBRANE BRAND AND MODEL – please check one and fill in information

☐ Please supply adapters for the following membrane brand and specific model
Brand_____Model_____

CERTIFICATION REQUIRED

❑ ASME Stamped and National Board Registered (please consult factory for pricing)
❑ CE Marked
❑ Standard, Certified by Pentair water.

EXTERIOR FINISH – please check one

☐ Standard – white high-gloss polyurethane coating.
☐ Option – optional colors are available for 50 or more vessels per order.
Call factory for pricing details.

MATERIAL OPTIONS

❑ Standard – All materials as per drawing 99108 on the first page.
❑ Customer specified materials: -
(Please consult the factory, as these options will affect pricing and vessel lead-time.)

For complete information on proper use of this vessel please refer to the 80E series USER'S GUIDE Bulletin 523004.

PROTEC™ PRODUCT LINE

Mega Side Port MSP ®
Specifically for large municipal systems where multiple porting was not a practical solution, the design provides over 50% more flow and can also be used to reduce pressure-drop to decrease system operation costs

8" End Ported Designs
Traditional vessels with the feed and concentrate connections located in the end closure of the vessel head.

8" Side Ported Designs
Side ported vessels with feed and concentrate connections located in the side wall of the vessel shell.

1000 PSI
SIDE PORT

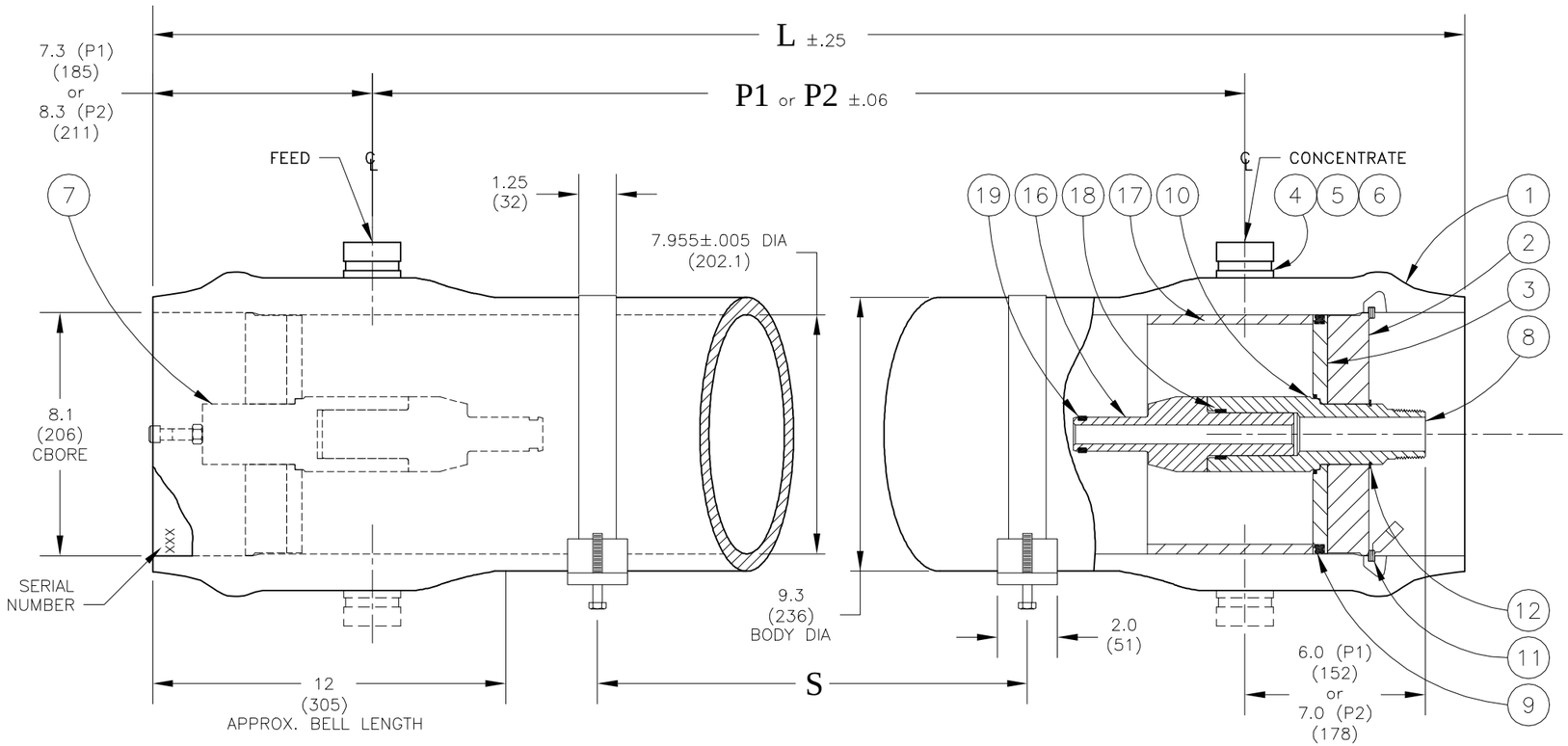

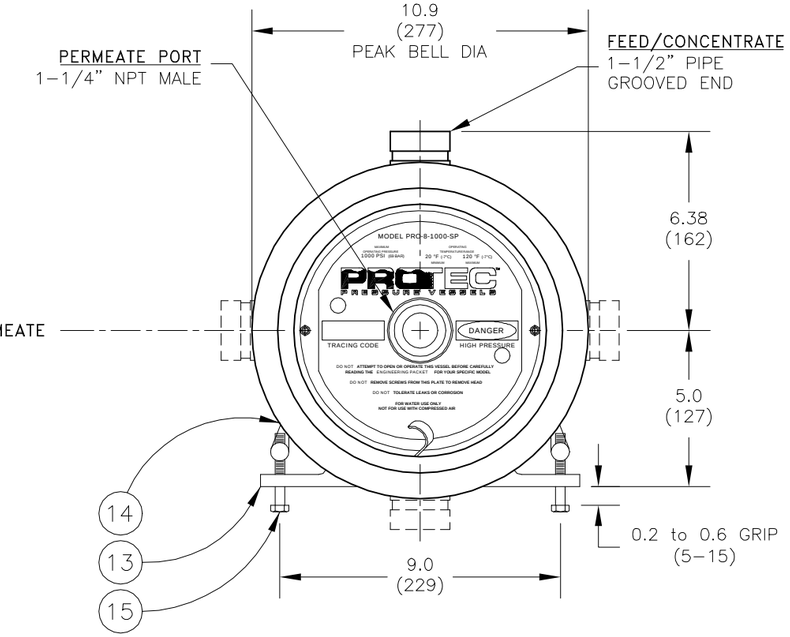

Shell Length Code	L inch (mm)	P1 Standard inch (mm)	P2 Optional inch (mm)	S Span in (mm)	Empty Weight lb (kg)
-1	61.6 (1565)	47 (1194)	45 (1143)	1 @ 28 (711)	133 (60)
-1.5	81.6 (2073)	67 (1702)	65 (1651)	1 @ 42 (1067)	157 (71)
-2	101.6 (2581)	87 (2210)	85 (2159)	1 @ 56 (1422)	180 (82)
-3	141.6 (3597)	127 (3226)	125 (3175)	1 @ 80 (2032)	228 (104)
-4	181.6 (4613)	167 (4242)	165 (4191)	2 @ 64 (1626)	275 (125)
-5	221.6 (5629)	207 (5258)	205 (5207)	2 @ 78 (1981)	322 (146)
-6	261.6 (6645)	247 (6274)	245 (6223)	2 @ 92 (2337)	370 (168)
-7	301.6 (7661)	287 (7290)	285 (7239)	2 @ 106 (2692)	417 (190)
-7.5	321.6 (8169)	307 (7798)	305 (7747)	2 @ 114 (2896)	441 (200)
-8	341.6 (8677)	327 (8306)	325 (8255)	2 @ 120 (3048)	464 (211)

ITEM	QTY	P/N	DESCRIPTION	MATERIAL
1	1	4080022	Shell	Filament Wound, Epoxy FRP
2	2	4080034	Bearing Plate	6061-T6 Aluminum, SB-221
3	2	4080064-1	Sealing Plate	PVC Thermoplastic
4	A/R	4080060-1	Feed/Concentrate Port	SST Super-Austenitic, 6 % Mo ,SB-675
5	A/R	6121187	Retaining Ring, F/C Port	Stainless Steel, 316
6	A/R	6110225	Seal, F/C Port	Ethylene Propylene
7	1	2080004	Auto-Shim™ Assembly	PVC Thermoplastic
8	1	4080072-1	Permeate Port, Downstream	PVC Thermoplastic
9	2	6100442	Head Seal	Ethylene Propylene
10	2	6110229	Permeate Port Seal	Ethylene Propylene
11	2	4080083	Retaining Ring w/ Finger Pull	Stainless Steel, 316
12	2	6130200	Retaining Ring, Permeate Port	Stainless Steel, 300 Series
13	2*	4080039	Support Saddle	Polyurethane
14	2	4080040	Strap Assembly	Stainless Steel, 300 Series
15	4	6150001	Strap Screw	Stainless Steel, 300 Series
16	A/R	-	Adapter	Thermoplastic (Upstream Solid)
17	1	4080043	Thrust Ring	PVC Thermoplastic
18	2	6110221	Adapter Seal	Ethylene Propylene
19	A/R	-	PWT Seal	Ethylene Propylene

*3 each with shell length -4 and longer

NOTES:

DIMENSIONS IN INCHES (MM APPROX.)

FOR REFERENCE ONLY, NOT TO BE USED FOR CONSTRUCTION UNLESS CERTIFIED

CENTER VESSEL ON 2 OR 3 SUPPORTS AT SPAN(S) "S". 3 SUPPORTS REQUIRED FOR LENGTHS -4 AND OVER

INCORRECT MANIFOLDING WILL CAUSE SEVERE LOCAL STRESS AROUND PORT AND MAY RESULT IN LEAKS AND PREMATURE FAILURE. TAKE EVERY PRECAUTION LISTED IN THIS PACKET.

INTERNAL PERMEATE PRESSURE MUST NOT EXCEED 125 PSI.

ASME SECTION X, RP CODE STAMP OPTIONAL

SPECIFICATIONS SUBJECT TO CHANGE WITHOUT NOTICE

PROTEC™ PRESSURE VESSELS

by
Progressive Composite Technologies, Inc.
Vista, California, U.S.A.

ENGR	AP 7/6/01
QLTY	BJ 7/9/01
MRKT	DWE 7/9/01

PRO 8-1000-SP

ECO	REVISED	DRAWING	REV
2001-127	7/10/01	101005	A

PORT SPECIFICATION CHART

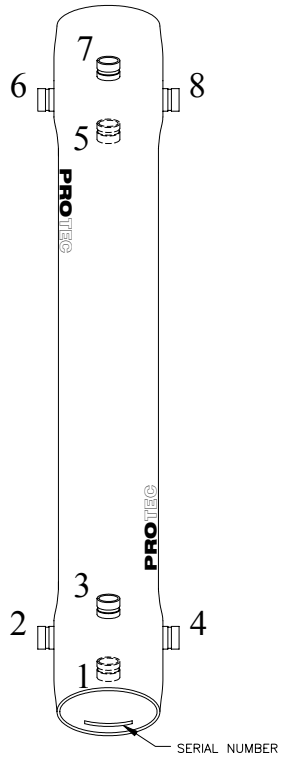

This chart is used to specify the location of the ports for each different vessel configuration in the system. Always use this chart to specify proper side port locations. Even though your system may use a standard port configuration, this chart allows us to place the logos in the correct location. If you have any questions, call the factory. Please use this chart as follows:

1) Determine proper port sizes using the multiple port guide.
2) Determine the proper port location for each vessel.
3) Starting at the serial number end, enter the location of the first port followed by the port size. Repeat this for each port on the serial number end.
4) Moving to the opposite end, enter the location of the first port followed by the port size. Repeat this for each port on this end.
5) Enter this information at the bottom of the ordering page for each vessel configuration.
6) Sign and date the ordering page before you send it in.

NOTE: Three ports per end maximum

Port Size Code	
D	1-1/2” Grooved End

Serial Number End | | | | | | |

Opposite end | | | | | | |

EXAMPLE

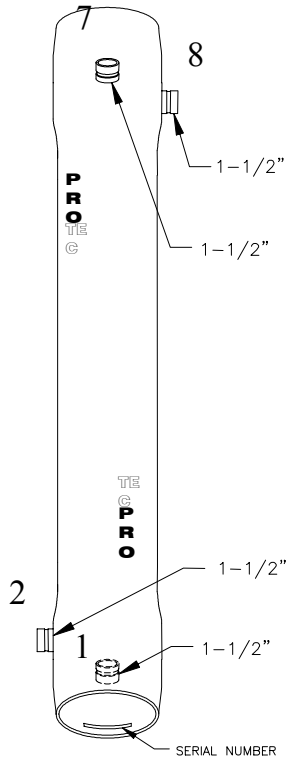

This example is provided to show you the proper way to specify you port locations. Please understand this example before filling out the ordering page. For questions concerning the use of this chart, please call the factory.

Serial Number End | 1 | D | 2 | D | | |

Opposite end | 7 | D | 8 | D | | |

Calculated Pressure Drop into Vessel from Side Port

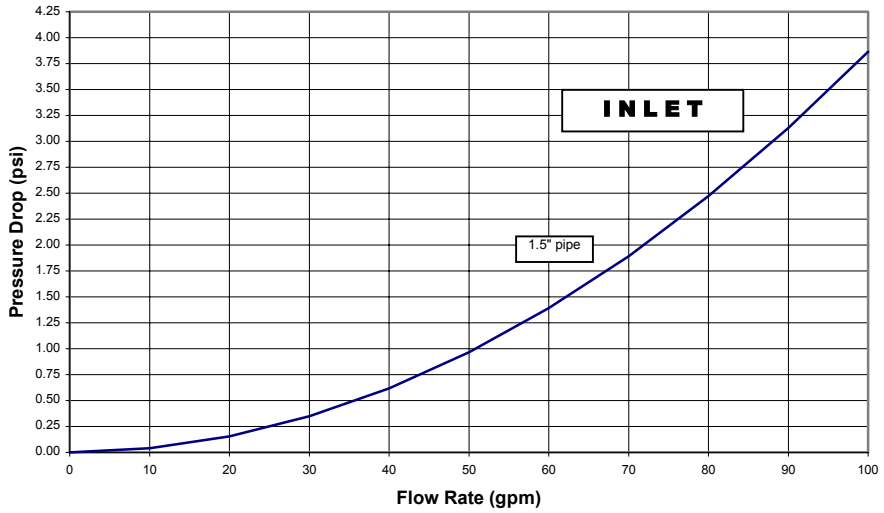

Calculated Pressure Drop From Vessel into Side Port

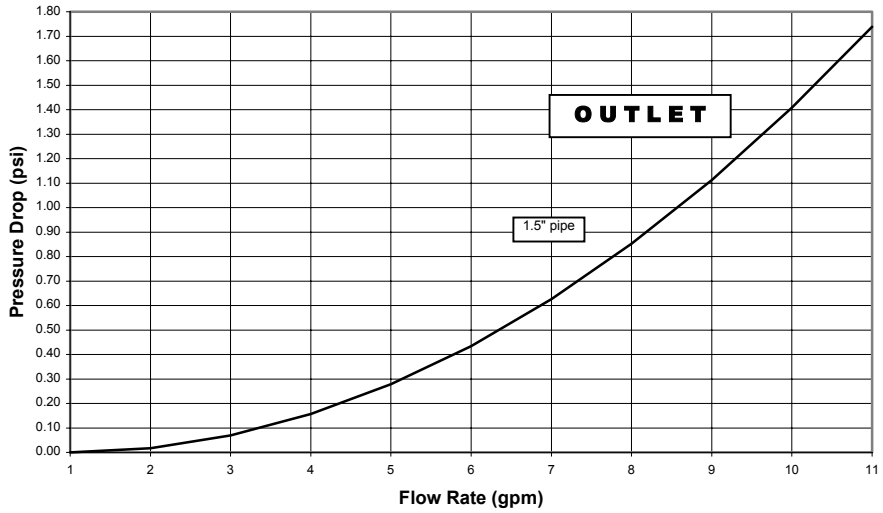

MULTIPLE PORT DIAGRAM

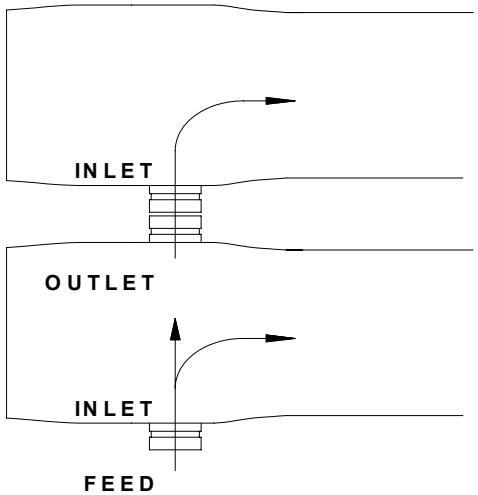

CALCULATE THE VELOCITY AND PRESSURE DROP AT EACH PORT USING THE CALCULATED INFORMATION PROVIDED HERE

Velocity vs. Flow Rate in schedule 40 pipe

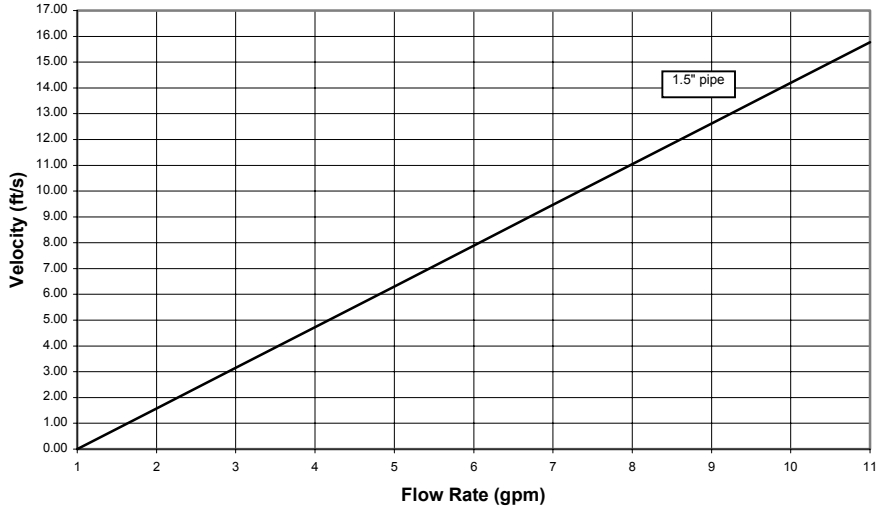

TORAY

Toray Reverse Osmosis Membrane Elements

New Century of Water Created by Toray Reverse Osmosis Elements

Efficient use of water resources is an important challenge in the 21st century. A global shortage of water resources is expected. Consideration of the earth's environment has become more important in recent years, giving rise to a growing demand for reverse osmosis membranes.

Demonstrating excellent quality and high performance, Toray RO elements are functional membrane elements that were developed through the polymer engineering of Toray, the first Japanese manufacturer of reverse osmosis membranes.

Toray RO element technology grew from Toray's abundant business experience. This experience has generated a broad product line spanning many fields of application: ultra pure water production for semiconductor and other industries, desalination of seawater, waste water treatment, and recovery of valuable process materials in the food processing industry.

The experience, technology and expertise of Toray are being actively applied to all water-related needs around the world through the global operation of overseas affiliates and sales agents.

Features of Reverse Osmosis

1. Removal of dissolved salts

Reverse osmosis can stably and effectively remove dissolved salts, dissolved organic substances (trihalomethane, its precursors, agricultural chemicals, etc.), and microfine particles (living and dead bacteria and many other microfine particles) from water.
Thus it is ideal for a wide array of applications ranging from production of ultra pure water to desalination of seawater.

2. Energy-saving separation technique

Since reverse osmosis does not require the evaporation of water, it consumes less energy than separation processes that use evaporation.

3. Utilizable as a concentration and recovery method

Reverse osmosis does not need heating, so it can concentrate and recover valuable process materials dissolved in a solution without degradation which might otherwise occur with other methods.

4. Compact configuration

Modules can be arranged in a three-dimensional configuration to provide excellent space efficiency, so the space needed for installation can be minimized.

5. Simple operation and control

Reverse osmosis systems are simple and easy to operate and maintain.

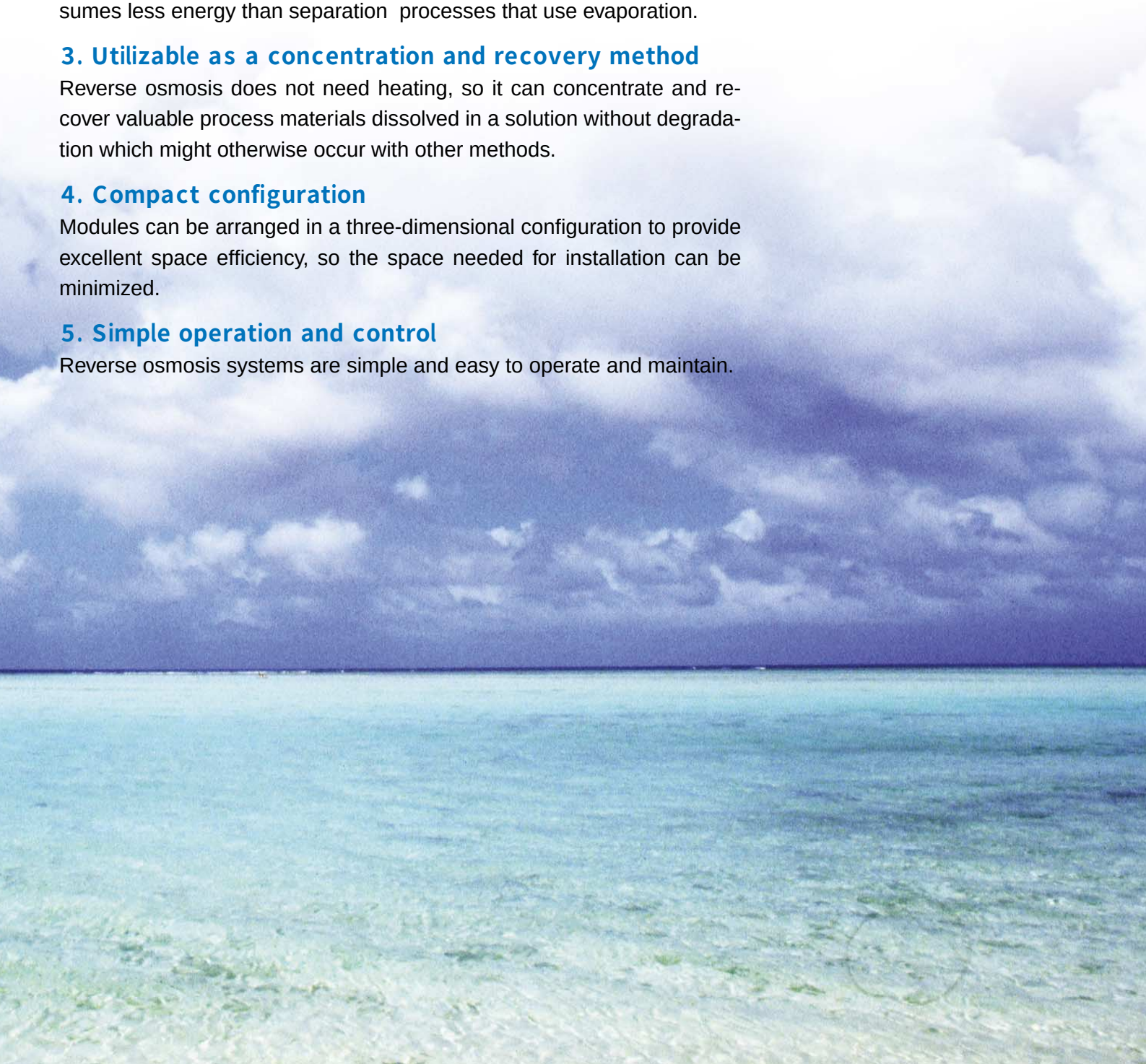

Reliable Technology for Water Production

Cross-Linked Polyamide Composite Membrane

- Electric power costs can be reduced to a great extent since this membrane operates at low pressures.
- The mambrane has excellent properties for removing dissolved salts, TOC, and silica, oemonstrating superb performance in the production of ultra pure water and the desalination of seawater.

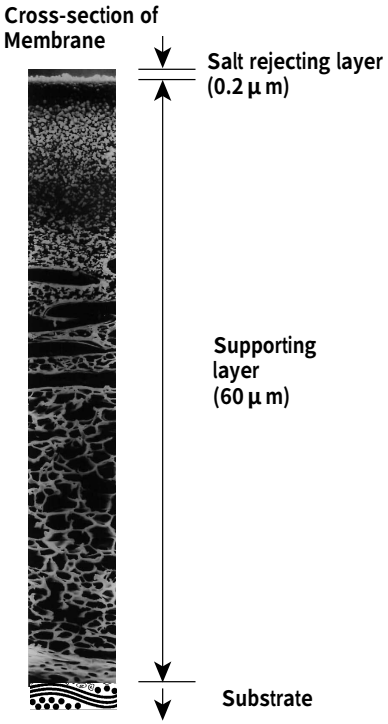

Cross-Linked Polyamide Composite Membrane Element

- Spiral wound reverse osmosis element.
- Little elution occurs from the materials that form the element. This allows the specific resistance and TOC rise time to be reduced in ultra pure water.
- Rich line of products for a wide range of water treatment applications.

Applications

Water treatment for various usages of water.
Toray RO element produces the right water for a diverse assortment of applications.

River water

Seawater

City water

Underground water

Industrial waste water

Utilization of permeate

Utilization of concentrate

Production of ultrapure water
Rinse water for semiconductor and liquid crystal industries

Production of pure water
Boiler water and process water for various industries

Production of drinking water
For dry regions and countermeasures against disaster and water shortage
(sea water and brackish water desalination)

Refining and softening of water
Removal of water hardness and silica; removal of trihalomethane, its precursors, and agricultural chemicals

Recycling and closed systems for various waste waters
Recycling of water in the semiconductor and liquid crystal industries
Recycling of industrial waste water, sewerage and office waste water

Concentration and recovery of valuable process materials
Concentration and recovery of foodstuffs and chemicals

Toray Industries, Inc., Membrane Products Dept.
8-1 Mihama 1-chome, Urayasu, Chiba 279-8555, Japan
Tel: +81-47-350-6030 Fax: +81-47-350-6066
http://www.toray.co.jp

Toray Membrane America, Inc.
12520 High Bluff Drive, Suite120, San Diego, CA 92130,USA
Tel: +1-858-523-0476 Fax: +1-858-523-0861
http://www.torayro.com

Toray Industries (Singapore) Pte. Ltd.
31C Exeter Road, #03-01, Comcentre III Atrium, Singapore, 239734
Tel: +65-6734-5271 Fax: +65-6533-2215

Toray Industries (China) Co., Ltd.
10th Floor, HSBC TOWER,
101 Yin Cheng East Rord, Pudong New Area, Shanghai, 200120 China
Tel: +86-21-6841-1470 Fax: +86-21-6841-2454

Toray Industries (H.K.) , Ltd.
14th Floor, TAL Building, 49 Austin Road, Kowloon, Hong Kong, China
Tel: +852-2196-7000 Fax: +852-2196-7138

Ropur AG
Grabenackerstrasse 8 CH-4142 Münchenstein 1, Switzerland
Tel: +41-61-415-87-10 Fax: +41-61-415-87-20
http://www.ropur.com/

Ropur Middle East
Jebel Ali Free Zone LOB09 / 107 POB17978, Dubai, UAE
Tel: +971-4-8815339 Fax: +971-4-8815620

Element Production:

Membranes and elements are manufactured and undertaken the quality assurance at Toray Ehime Plamt, which has obtained
Quality Management System ISO 9001 certification, registration number; JQA-0683, and Environmental Management System ISO 14001 certification, registration number; JQA-EM0440.

Toray SU-series & SC-series Reverse Osmosis Element Product List

Membrane	Main Application	Operating Pressure	Model	Description	Size		Performance		Test Conditions				
					Diameter	Length	Salt Rejection	Product Flow Rate	Operating Pressure	Feed Concentration	Temperature	pH	Brine Flow
					inch	inch	%	m3/d (gpd)	MPa (psi)	mg/l NaCl	˚C (˚F)		l/min (gpm)
Polyamide													
	Brackish Water Industrial Water												
		Standard	SU-720	High rejection	8	40	99.4	26 (6,900)	1.5 (220)	1,500	25 (77)	6.5	80 (21)
			SU-720F	High membrane area	8	40	99.4	32 (8,500)	1.5 (220)	1,500	25 (77)	6.5	80 (21)
			SU-720L	High flow	8	40	99	22 (5,800)	1.0 (150)	1,500	25 (77)	6.5	80 (21)
			SU-720LF	High flow and high membrane area	8	40	99	27 (7,100)	1.0 (150)	1,500	25 (77)	6.5	80 (21)
			SU-720R	Highest rejection	8	40	99.7	19 (5,000)	1.5 (220)	1,500	25 (77)	6.5	80 (21)
			SU-710	For small systems	4	40	99.4	6.5 (1,700)	1.5 (220)	1,500	25 (77)	6.5	20 (5.3)
			SU-710L	For small systems	4	40	99	5.5 (1,500)	1.0 (150)	1,500	25 (77)	6.5	20 (5.3)
			SU-710R	For small systems	4	40	99.7	4.75 (1,300)	1.5 (220)	1,500	25 (77)	6.5	20 (5.3)
		Low	SUL-G20	High rejection and energy saving	8	40	99.5	30 (7,900)	0.75 (110)	500	25 (77)	6.5	80 (21)
			SUL-G20F	High membrane area, high rejection and energy saving	8	40	99.5	37 (9,800)	0.75 (110)	500	25 (77)	6.5	80 (21)
			SUL-G10	For small systems	4	40	99.5	6.5 (1,700)	0.75 (110)	500	25 (77)	6.5	20 (5.3)
	Seawater												
		High	SU-820	High rejection	8	40	99.75	16 (4,200)	5.5 (800)	Sea water 3.5%	25 (77)	6.5	80 (21)
			SU-820FA	High membrane area and high rejection	8	40	99.75	19 (5,000)	5.5 (800)	Sea water 3.5%	25 (77)	6.5	80 (21)
			SU-820L	High flow	8	40	99.7	21 (5,500)	5.5 (800)	Sea water 3.5%	25 (77)	6.5	80 (21)
			SU-810	For small systems	4	40	99.75	4 (1,100)	5.5 (800)	Sea water 3.5%	25 (77)	6.5	20 (5.3)
	Hot water sanitizable												
		Standard	SU-720TS	High rejection	8	40	99.4	26 (6,900)	1.5 (220)	1,500	25 (77)	6.5	80 (21)
		Low	SUL-G20TS	High rejection and energy saving	8	40	99.5	30 (7,900)	0.75 (110)	500	25 (77)	6.5	80 (21)
			SUL-G20FTS	High membrane area, high rejection and energy saving	8	40	99.5	36 (9,500)	0.75 (110)	500	25 (77)	6.5	80 (21)
			SUL-G10TS	For small systems	4	40	99.5	5 (1,300)	0.75 (110)	500	25 (77)	6.5	20 (5.3)
	Ultra Pure Water												
		Standard	SU-720P	Low elution and easy to rinse	8	40	-	32 (8,500)	0.75 (110)	Pure water	25 (77)	6.5	12 (3.2)
			SU-710P	For small systems	4	40	-	8 (2,100)	0.75 (110)	Pure water	25 (77)	6.5	3 (0.8)
		Low	SUL-G20P	Low elution, easy to rinse and energy saving	8	40	-	32 (8,500)	0.75 (110)	Pure water	25 (77)	6.5	12 (3.2)
			SUL-G10P	For small systems	4	40	-	7.5 (2,000)	0.75 (110)	Pure water	25 (77)	6.5	3 (0.8)
		Ultra low	SUL-H20P	Low elution, easy to rinse and energy saving	8	40	-	27 (7,100)	0.5 (70)	Pure water	25 (77)	6.5	12 (3.2)
	Nano Filtration												
		Standard	SU-620	Basic NF element	8	40	55	18 (4,800)	0.35 (50)	500	25 (77)	6.5	80 (21)
			SU-620F	Higher membrane area	8	40	55	22 (5,800)	0.35 (50)	500	25 (77)	6.5	80 (21)
			SU-610	For small systems	4	40	55	4.5 (1,200)	0.35 (50)	500	25 (77)	6.5	20 (5.3)
Cellose Acetate													
	Brackish water Industrial water Waste water												
		Medium	SC-2201	High flow and chlorine resistance	8	40	95	35.2 (9,300)	3.0 (440)	1,500	25 (77)	6	80 (21)
			SC-4201	High rejection and chlorine resistance	8	40	97	27.2 (7,200)	3.0 (440)	1,500	25 (77)	6	80 (21)
			SC-6201X	Highest rejection and chlorine resistance	8	40	98	20.5 (5,400)	3.0 (440)	1,500	25 (77)	6	80 (21)
			SC-2101	For small systems	4	40	95	8.8 (2,300)	3.0 (440)	1,500	25 (77)	6	10 (2.6)
			SC-4101	For small systems	4	40	97	6.8 (1,800)	3.0 (440)	1,500	25 (77)	6	10 (2.6)
			SC-6101	For small systems	4	40	98	5.3 (1,400)	3.0 (440)	1,500	25 (77)	6	10 (2.6)

Toray TM-series Reverse Osmosis Element Product List

Membrane						Performance		Test Conditions				
	Application											
		Pressure Range	Rejection Range	Diameter	Model	Salt Rejection	Product Flow Rate	Operating Pressure	Feed Concentration	Temperature	pH	Recovery
				inch		%	gpd (m3/d)	psi (MPa)	mg/l NaCl	° F (° C)		%
Cross Linked Aromatic Polyamide												
	Brackish Water and Industrial Water											
		Standard	High	8	TM720 -370	99.7	9,500 (36)	225 (1.55)	2,000	77 (25)	7	15
					-400	99.7	10,200 (39)	225 (1.55)	2,000	77 (25)	7	15
					-430	99.7	11,000 (42)	225 (1.55)	2,000	77 (25)	7	15
				4	TM710	99.7	2,200 (8.3)	225 (1.55)	2,000	77 (25)	7	15
		Low	Medium	8	TMG20 -400	99.5	10,200 (39)	110 (0.76)	500	77 (25)	7	15
					-430	99.5	11,000 (42)	110 (0.76)	500	77 (25)	7	15
				4	TMG10	99.5	2,000 (7.6)	110 (0.76)	500	77 (25)	7	15
		UltraLow	Medium	8	TMH20 -370	99.4	12,000 (45)	100 (0.69)	500	77 (25)	7	15
					-400	99.4	13,000 (49)	100 (0.69)	500	77 (25)	7	15
					-430	99.4	14,000 (53)	100 (0.69)	500	77 (25)	7	15
				4	TMH10	99.4	2,800 (10.5)	100 (0.69)	500	77 (25)	7	15
	Low Fouling											
		Standard	High	8	TML20 -370	99.7	9,500 (36)	225 (1.55)	2,000	77 (25)	7	15
					-400	99.7	10,200 (39)	225 (1.55)	2,000	77 (25)	7	15
	Seawater											
		SW Standard	High	8	TM820 -370	99.75	6,000 (23)	800 (5.52)	32,000	77 (25)	7	8
					-400	99.75	6,500 (25)	800 (5.52)	32,000	77 (25)	7	8
				4	TM810	99.75	1,200 (4.5)	800 (5.52)	32,000	77 (25)	7	8
					TM810L	99.70	1,600 (6.0)	800 (5.52)	32,000	77 (25)	7	8
		SW High	High	8	TM820H -370	99.75	5,600 (21)	800 (5.52)	32,000	77 (25)	7	8

TORAY

Seawater RO Elements

TM800E

Type	Diameter inch	Membrane Area ft^2 (m^2)	Salt Rejection %	Product Flow Rate gpd (m^3/d)
TM820E-400	8"	400 (37)	99.75	7,500 (28)

1. Membrane Type		Cross Linked Fully Aromatic Polyamide Composite
2. Test Conditions		
	Feed Water Pressure	800 psi (5.52 MPa)
	Feed Water Temperature	77 °F (25 °C)
	Feed Water Concentration	32,000 mg/l NaCl
	Recovery Rate	8 %
	Feed Water pH	7
3. Minimum Salt Rejection		99.5 %
4. Minimum Product Flow Rate		6,400 gpd (24 m^3/d)

Dimensions

All dimensions shown in inches (millimeter).

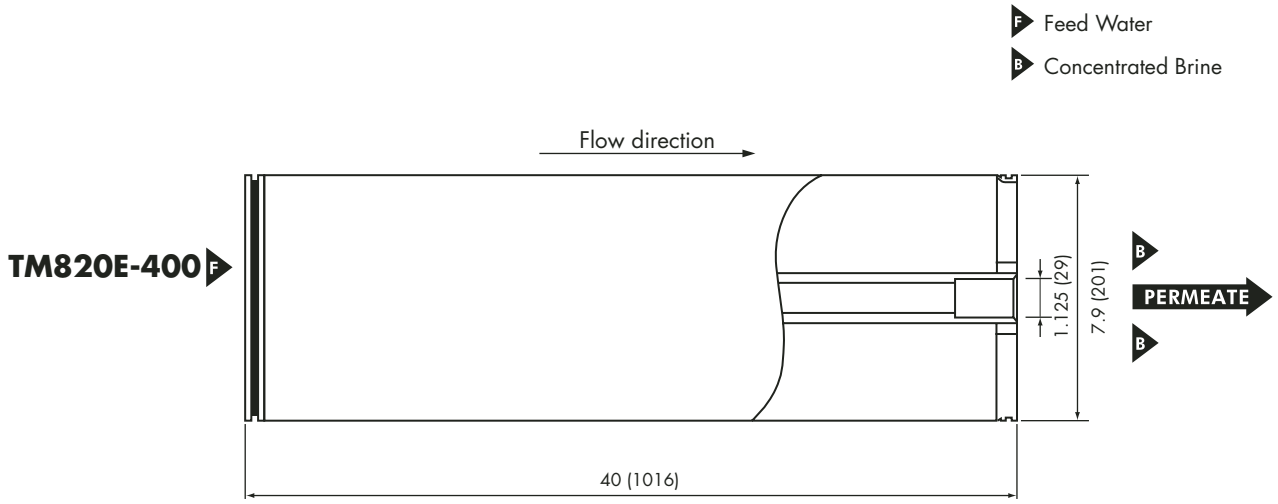

Operating Limits

Maximum Operating Pressure	1000 psi (6.9 MPa)
Maximum Feed Water Temperature	113 °F (45 °C)
Maximum Feed Water SDI_{15}	5
Feed Water Chlorine Concentration	Not Detectable
Feed Water pH Range, Continuous Operation	2-11
Feed Water pH Range, Chemical Cleaning	1-12
Maximum Pressure Drop per Element	20 psi (0.14 MPa)
Maximum Pressure Drop per Vessel	60 psi (0.4 MPa)

Operating Information

1. For the recommended design range, please consult the latest Toray technical bulletin, design guidelines, computer design program, and/or call an application specialist. If the operating limits given in this Product Information Bulletin are not strictly followed, the Limited Warranty will be null and void.
2. All elements are wet tested, treated with a 1% by weight percent sodium bisulfite storage solution, and then vacuum packed in oxygen barrier bags. To prevent biological growth during short term storage, shipment, or system shutdown, it is recommended that Toray elements be immersed in a protective solution containing 500 - 1,000 ppm of sodium bisulfite (food grade) dissolved in permeate.
3. Permeate from the first hour of operation shall be discarded.
4. The customer is fully responsible for the effects of chemicals that are incompatible with the elements. Their use will void the element Limited Warranty.

Notice

1. Toray accepts no responsibility for results obtained by the application of this information or the safety or suitability of Toray's products, either alone or in combination with other products. Users are advised to make their own tests to determine the safety and suitability of each product combination for their own purposes.
2. All data may change without prior notice, due to technical modifications or production changes.

Asia and Oceania:
Toray Industries, Inc.
Membrane Products Department

8-1, Mihama 1-chome
Urayasu, Chiba 279-8555, Japan
Tel: +81 47 350 6030
Fax: +81 47 350 6066
http://www.toray-membrane.com

Americas:
Toray Membrane America, Inc.
Sales Office

12520 High Bluff Drive, Suite 120
San Diego, CA 92130, U.S.A.
Tel: +1 858 523 0476
Fax: +1 858 523 0861

Europe, Middle East and Africa:
Toray Membrane Europe AG

Grabenackerstrasse 8
CH-4142 Münchenstein 1, Switzerland
Tel: +41 61 415 87 10
Fax: +41 61 415 87 20

MODEL TM820H-400

Membrane Type	Cross Linked Fully Aromatic Polyamide Composite	
Membrane Surface Area	400 ft^2 (37 m^2)	Brine spacer thickness: 28 mil

Performance Specification

	NaCl Solution
Salt Rejection	**99.75 %**
Product Flow Rate	**6,000 gpd** (23 m^3/day)

Notes :

1. Test Conditions

Feed Water Pressure	800	psi	(5.5 MPa)
Feed Water Temperature	77	°F	(25 °C)
Feed Water Concentration	35,000	mg/ℓ	as NaCl
Recovery Rate	8	%	
Feed Water pH	7		

2. Minimum Salt Rejection 99.5 %
3. Minimum Product Flow Rate 4,800 gpd (18 m^3/day)
4. The membrane area stated is a nominal value and is not a guaranteed specification.

Dimensions

All dimensions shown in inches (milimeters).

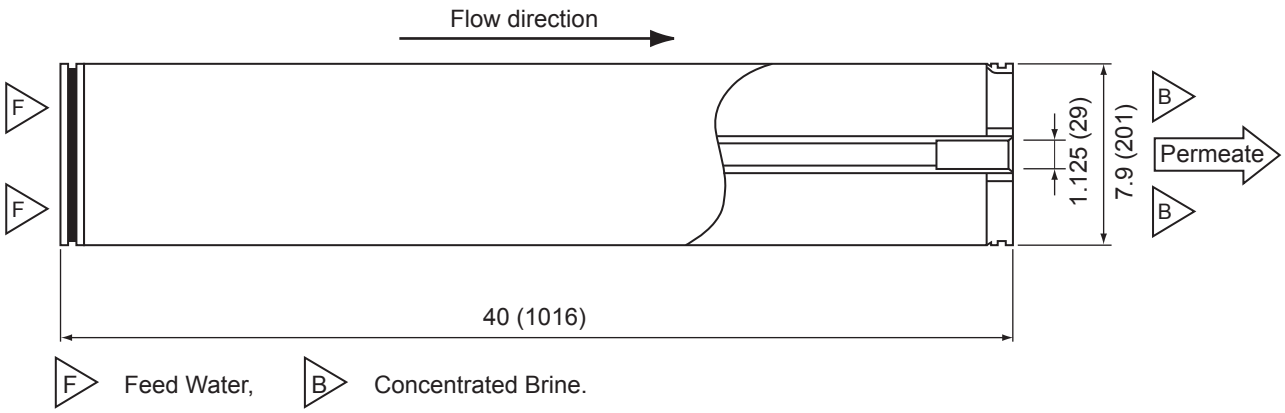

TORAY

TORAY Industries, Inc. Membrane Products Department.
8-1, Mihama 1-Chome, Urayasu, Chiba 279-8555, Japan
Tel +81 (47) 350 6030
Fax +81 (47) 350 6066

TORAY Membrane America, Inc.
USA., South America, Canada & Mexico
12520 High Bluff Drive, Suite 120,
San Diego, CA 92130, USA
Tel +1 (858) 523 0476
Fax +1 (858) 523 0861

ROPUR AG
Europe, Middle East and Africa
Grabenackerstrasse 8
CH-4142 Münchenstein 1, Switzerland
Tel +41 (61) 415 87 10
Fax +41 (61) 415 87 20

Operating Limits:

Maximum Operating Pressure	**1200 psi** (8.6 MPa)
Maximum Feed Water Temperature	**113 °F** (45 °C)
Maximum Feed Water Silt Density $Index_{15}$	**5**
Feed Water Chlorine Concentration	**Not Detectable**
Feed Water pH Range, Continuous Operation	**2 - 11**
Feed Water pH Range, Chemical Cleaning	**1 - 12**
Maximum Pressure Drop per Element	**20 psi** (0.14 MPa)
Maximum Pressure Drop per Vessel	**60 psi** (0.4 MPa)

Operating Information:

1. For the recommended design range, please consult the latest Toray technical bulletin, design guidelines, computer design program, and/or call an application specialist. If the operating limits given in this Product Information Bulletin are not strictly followed, the Limited Warranty will be null and void.

2. All elements are wet tested, treated with a 1% by weight percent sodium bisulfite storage solution, and then vacuum bagged in oxygen barrier bags. To prevent biological growth during short term storage, shipment, or system shutdown, it is recommended that Toray elements be immersed in a protective solution containing 500 - 1,000 ppm of sodium bisulfite (food grade) dissolved in permeate.

3. Permeate from the first hour of operation should be discarded.

4. The customer is fully responsible for the effects of chemicals that are incompatible with the elements. Their use will void the element Limited Warranty.

FLUID SYSTEMS® TFC® - SS 8” ELEMENTS

High Rejection, Seawater, RO Elements

PRODUCT DESCRIPTION

Membrane Chemistry:	Proprietary TFC polyamide
Membrane Type:	TFC-SS membrane
Construction:	Spiral wound with fiberglass outerwrap
Applications:	Seawater desalination, high rejection RO membrane
Options:	40” (1,016 mm) and 60” (1,524 mm) Magnum® length, standard or high area construction

SPECIFICATIONS

Part Numbers	Model	Permeate Flow gpd	Permeate Flow (m^3/d)	Chloride Rejection percent	Membrane Area ft^2	Membrane Area (m^2)
8282200	2822 SS-300	5,000	(18.9)	99.6	300	(27.9)
8282202	2822 SS-360	6,000	(22.7)	99.6	360	(33.4)
8283200	2832 SS-465 Magnum®	7,750	(29.3)	99.6	465	(43.2)
8283201	2832 SS-540 Magnum®	9,000	(34.3)	99.6	540	(50.2)

Test Conditions: 32,800 mg/l NaCl solution (isosmotic to ASTM standard seawater) at 800 psi (5,520 kPa) applied pressure, 7% recovery (11% recovery for Magnum elements), 77°F (25°C) and pH 7.5.

OPERATING & DESIGN INFORMATION

Typical operating pressure:	750-950 psi (5,175 – 6,555 kPa)
Maximum operating pressure:	1,200 psi (8,275 kPa)
Maximum operating temperature:	113°F (45°C)
Maximum cleaning temperature:	113°F (45°C)
Maximum continuous free chlorine:	<0.1 mg/l
Allowable pH – continuous operation:	4 – 11
Allowable pH – short term cleaning:	2.5 – 11
Maximum differential pressure per element:	10/15 psi (69/104 kPa)
Maximum differential pressure per vessel:	60 psi (414 kPa)
Maximum feed turbidity:	1 NTU
Maximum feed SDI (15 minute):	5
Feed spacer thickness:	28/31 mil (0.7/0.8 mm)

PRODUCT DIMENSIONS AND WEIGHT

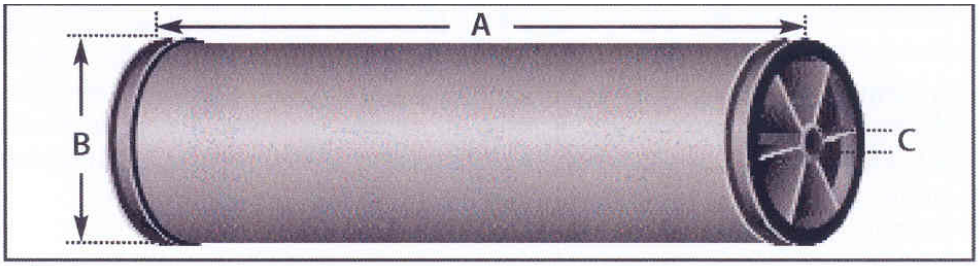

Model	A inches (mm)	B inches (mm)	C inches (mm)	Weight lbs (kg)	Part Numbers Interconnector	O-ring	Brine Seal
2822 SS-300	40 (1,016)	8 (203.2)	1.125 (28.6)	40 (18)	0035260	0035464	0035705
2822 SS-360	40 (1,016)	8 (203.2)	1.125 (28.6)	49 (20)	0035260	0035464	0035705
2832 SS-465 Magnum®	60 (1,524)	8 (203.2)	1.125 (28.6)	58 (26)	0035260	0035464	0035705
2832 SS-540 Magnum®	60 (1,524)	8 (203.2)	1.125 (28.6)	60 (27)	0035260	0035464	0035705

Performance:

Performance specifications shown on the front side of this document are nominal values. Individual element permeate flows may vary +/-15% from the values shown. Minimum rejection is 99.3% at the conditions shown.

System performance should be predicted using KMS' ROPRO® design software. Element performance is based on the nominal values shown.

System operating data should be normalized and key performance parameters tracked using KMS' NORMPRO® software.

Operating Limits:

- Operating Pressure: Maximum operating pressure is 1,200 psi (8,275 kPa). Typical operating pressure for TFC-SS systems is in the range of 750 psi (5,175 kPa) to 950 psi (6,555 kPa). Actual operating pressure is dependent upon system flux rate (appropriate for feed source) as well as feed salinity, recovery and temperature conditions.
- Permeate Pressure: Permeate pressure should not exceed feed-concentrate pressure by more than 5 psi (34 kPa) at any time (on-line, off-line and during transition).
- Differential Pressure: Maximum differential pressure limits are 10 psi (69 kPa) for a 40" (1,016 mm) long element and 15 psi (104 kPa) for a 60" (1,524 mm) long element. Maximum differential pressure for any length pressure vessel is 60 psi (414 kPa).
- Temperature: Maximum operating temperature is 113˚F (45˚C). Maximum cleaning temperature is 113˚F (45˚C).
- pH: Allowable range for continuous operation is pH 4-11. Allowable range for short term cleaning is pH 2.5-11.
- Turbidity and SDI: Maximum feed turbidity is 1 NTU. Maximum feed Silt Density Index (SDI) is 5.0 (15 minute test). Experience has shown that feedwater with turbidity greater than 0.2 NTU generally results in frequent cleanings.
- Recovery: Maximum recovery is site and application specific. In general, single element recovery is approximately 7% for 40" (1,016 mm) long and 11% for 60" (1,524 mm) long elements. Recovery limits should be determined using KMS' ROPRO program.

Chemical Tolerance:

- Chlorine: Intentional exposure of TFC-SS membrane to free chlorine or other oxidizing agents such as permanganate, ozone, bromine and iodine is not recommended. TFC-SS membrane has a free chlorine tolerance of approximately 1,000 ppm-hours based on testing at 77˚F (25˚C), pH 8. This tolerance may be significantly reduced if catalyzing metals such as iron are present or if the pH and/or temperature are different. Sodium metabisulfite (without catalysts such as cobalt) is the preferred reducing agent. TFC-SS membrane has a chloramine tolerance of approximately 60,000 ppm-hours in the absence of free chlorine based on testing at 77˚F (25˚C), pH 8.
- Cationic (Positively Charged) Polymers and Surfactants: TFC-SS membrane may be irreversibly fouled if exposed to cationic (positively charged) polymers or surfactants. Exposure to these chemicals during operation or cleaning is not recommended.

Lubricants:

For element loading, use only approved silicone lubricant, water, or glycerin to lubricate O-rings and brine seals. The use of petroleum based lubricants or vegetable based oils may damage the element and void the warranty.

Service and Ongoing Technical Support:

KMS has an experienced staff of professionals available to assist endusers, and OEM's for optimization of existing systems and support with the development of new applications. Along with the availability of supplemental technical bulletins, KMS also offers a complete line of KOCHTREAT® and KOCHKLEEN® RO pretreatment and maintenance chemicals.

Koch Membrane Systems, Inc., www.kochmembrane.com
USA: 850 Main Street, Wilmington, MA 01887-3388, Telephone: 800-343-0499, Telephone: 978-657-4250, Fax: 978-657-5208
USA: 10054 Old Grove Road, San Diego, CA 92131, Telephone: 800-525-4369, Telephone: 858-695-3840, Fax 858-695-2176
UK: The Granary, Telegraph Street, Stafford, ST17 4AT, Telephone: +44-1785-272500, Fax: +44-1785-223149
AUSTRALIA: Ste. 6, Level 1/186-190 Church St., Parramatta, NSW 2150, Australia, Tel: +61-2-8833-4640, Fax: +61-2-9689-3615

FLUID SYSTEMS® TFC® - SS 8” PREMIUM ELEMENTS

High Rejection, Premium Seawater, RO Elements

PRODUCT DESCRIPTION

Membrane Chemistry:	Proprietary TFC polyamide
Membrane Type:	TFC-SS membrane
Construction:	Spiral-wound with fiberglass outerwrap
Applications:	Seawater desalination, high rejection premium RO membrane
Options:	Standard or high-area construction

SPECIFICATIONS

Part Numbers	Model	Permeate Flow gpd	Permeate Flow (m^3/d)	Chloride Rejection percent	Membrane Area ft^2	Membrane Area (m^2)
8282201	2822 SS-300 Premium	4,500	(17.0)	99.75 minimum	300	(27.9)
8282203	2822 SS-360 Premium	5,500	(20.8)	99.75 minimum	360	(33.4)

Test Conditions: 32,800 mg/l NaCl solution (isosmotic to ASTM standard) at 800 psi (5,520 kPa) applied pressure, 7% recovery 77°F (25°C) and pH 7.5.

OPERATING & DESIGN INFORMATION

Typical operating pressure:	750-950 psi (5,175 – 6,555 kPa)
Maximum operating pressure:	1,200 psi (8,275 kPa)
Maximum operating temperature:	113°F (45°C)
Maximum cleaning temperature:	113°F (45°C)
Maximum continuous free chlorine:	<0.1 mg/l
Allowable pH – continuous operation:	4 – 11
Allowable pH – short term cleaning:	2.5 – 11
Maximum differential pressure per element:	10 psi (69 kPa)
Maximum differential pressure per vessel:	60 psi (414 kPa)
Maximum feed turbidity:	1 NTU
Maximum feed SDI (15 minute):	5
Feed spacer thickness:	31/28 mil (0.8/0.7 mm)

PRODUCT DIMENSIONS AND WEIGHT

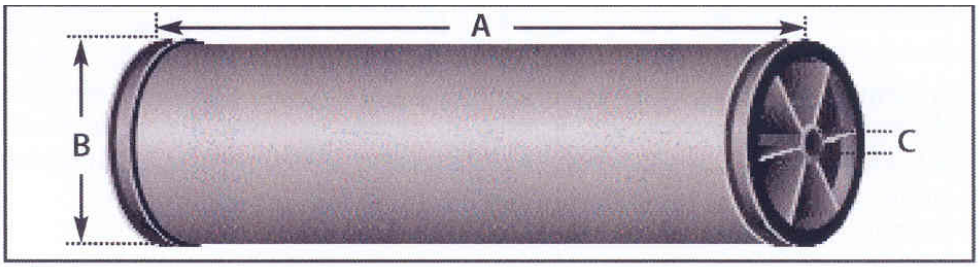

Model	A inches (mm)	B inches (mm)	C inches (mm)	Weight lbs (kg)	Part Numbers Interconnector	O-ring	Brine Seal
2822 SS-300 Premium	40 (1,016)	8 (203.2)	1.125 (28.6)	40 (18)	0035260	0035464	0035705
2822 SS-360 Premium	40 (1,016)	8 (203.2)	1.125 (28.6)	40 (18)	0035260	0035464	0035705

Performance:
Performance specifications shown on the front side of this document are nominal values. Individual element permeate flows may vary +20/-15% from the values shown. Minimum chloride ion rejection is 99.75% at the conditions shown.

System performance should be predicted using KMS' ROPRO® design software. Element performance is based on the nominal values shown.

System operating data should be normalized and key performance parameters tracked using KMS' NORMPRO® software.

Operating Limits:

- Operating Pressure: Maximum operating pressure is 1,200 psi (8,275 kPa). Typical operating pressure for TFC-SS systems is in the range of 750 psi (5,175 kPa) to 950 psi (6,555 kPa). Actual operating pressure is dependent upon system flux rate (appropriate for feed source) as well as feed salinity, recovery and temperature conditions.
- Permeate Pressure: Permeate pressure should not exceed feed-concentrate pressure by more than 5 psi (34 kPa) at any time (on-line, off-line and during transition).
- Differential Pressure: Maximum differential pressure is 10 psi (69 kPa) for a 40" (1,016 mm) long element. Maximum differential pressure for any length pressure vessel is 60 psi (414 kPa).
- Temperature: Maximum operating temperature is 113°F (45°C). Maximum cleaning temperature is 113°F (45°C).
- pH: Allowable range for continuous operation is pH 4-11. Allowable range for short term cleaning is pH 2.5-11.
- Turbidity and SDI: Maximum feed turbidity is 1 NTU. Maximum feed Silt Density Index (SDI) is 5.0 (15 minute test). Experience has shown that feedwater with turbidity greater than 0.2 NTU generally results in frequent cleanings.
- Recovery: Maximum recovery is site and application specific. In general, single element recovery is approximately 7%. Recovery limits should be determined using KMS' ROPRO program.

Chemical Tolerance:

- Chlorine: Intentional exposure of TFC-SS membrane to free chlorine or other oxidizing agents such as permanganate, ozone, bromine and iodine is not recommended. TFC-SS membrane has a free chlorine tolerance of approximately 1,000 ppm-hours based on testing at 77°F (25°C), pH 8. This tolerance may be significantly reduced if catalyzing metals such as iron are present or if the pH and/or temperature are different. Sodium metabisulfite (without catalysts such as cobalt) is the preferred reducing agent. TFC-SS membrane has a chloramine tolerance of approximately 60,000 ppm-hours in the absence of free chlorine based on testing at 77°F (25°C), pH 8.
- Cationic (Positively Charged) Polymers and Surfactants: TFC-SS membrane may be irreversibly fouled if exposed to cationic (positively charged) polymers or surfactants. Exposure to these chemicals during operation or cleaning is not recommended.

Lubricants:
For element loading, use only the recommended silicone lubricant (or approved equivalent), water or glycerin to lubricate O-rings and brine seals. The use of petroleum based lubricants or vegetable based oils may damage the element and void the warranty.

Service and Ongoing Technical Support:
KMS has an experienced staff of professionals available to assist endusers and OEM's for optimization of existing systems and support with the development of new applications. Along with the availability of supplemental technical bulletins, KMS also offers a complete line of KOCHTREAT® and KOCHKLEEN® RO pretreatment and maintenance chemicals.

Koch Membrane Systems, Inc., www.kochmembrane.com
USA: 850 Main Street, Wilmington, MA 01887-3388, Telephone: 800-343-0499, Telephone: 978-657-4250, Fax: 978-657-5208
USA: 10054 Old Grove Road, San Diego, CA 92131, Telephone: 800-525-4369, Telephone: 858-695-3840, Fax 858-695-2176
UK: The Granary, Telegraph Street, Stafford, ST17 4AT, Telephone: +44-1785-272500, Fax: +44-1785-223149
AUSTRALIA: Ste. 6, Level 1/186-190 Church St., Parramatta, NSW 2150, Australia, Tel: +61-2-8833-4640, Fax: +61-2-9689-3615

FLUID SYSTEMS® TFC® - SS 8” ELEMENTS

High Rejection, Seawater, RO Elements

PRODUCT DESCRIPTION

Membrane Chemistry:	Proprietary TFC polyamide
Membrane Type:	TFC-SS membrane
Construction:	Spiral wound with fiberglass outerwrap
Applications:	Seawater desalination, high rejection RO membrane
Options:	40” (1,016 mm) and 60” (1,524 mm) Magnum® length, standard or high area construction

SPECIFICATIONS

Part Numbers	Model	Permeate Flow gpd	Permeate Flow (m^3/d)	Chloride Rejection percent	Membrane Area ft^2	Membrane Area (m^2)
8282200	2822 SS-300	5,000	(18.9)	99.6	300	(27.9)
8282202	2822 SS-360	6,000	(22.7)	99.6	360	(33.4)
8283200	2832 SS-465 Magnum®	7,750	(29.3)	99.6	465	(43.2)
8283201	2832 SS-540 Magnum®	9,000	(34.3)	99.6	540	(50.2)

Test Conditions: 32,800 mg/l NaCl solution (isosmotic to ASTM standard seawater) at 800 psi (5,520 kPa) applied pressure, 7% recovery (11% recovery for Magnum elements), 77°F (25°C) and pH 7.5.

OPERATING & DESIGN INFORMATION

Typical operating pressure:	750-950 psi (5,175 – 6,555 kPa)
Maximum operating pressure:	1,200 psi (8,275 kPa)
Maximum operating temperature:	113°F (45°C)
Maximum cleaning temperature:	113°F (45°C)
Maximum continuous free chlorine:	<0.1 mg/l
Allowable pH – continuous operation:	4 – 11
Allowable pH – short term cleaning:	2.5 – 11
Maximum differential pressure per element:	10/15 psi (69/104 kPa)
Maximum differential pressure per vessel:	60 psi (414 kPa)
Maximum feed turbidity:	1 NTU
Maximum feed SDI (15 minute):	5
Feed spacer thickness:	28/31 mil (0.7/0.8 mm)

PRODUCT DIMENSIONS AND WEIGHT

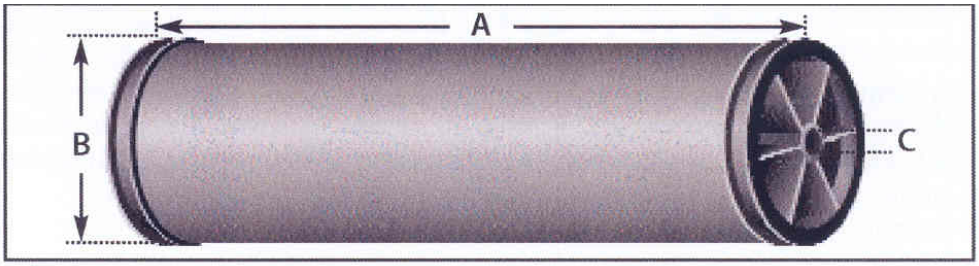

Model	A inches (mm)	B inches (mm)	C inches (mm)	Weight lbs (kg)	Part Numbers Interconnector	O-ring	Brine Seal
2822 SS-300	40 (1,016)	8 (203.2)	1.125 (28.6)	40 (18)	0035260	0035464	0035705
2822 SS-360	40 (1,016)	8 (203.2)	1.125 (28.6)	49 (20)	0035260	0035464	0035705
2832 SS-465 Magnum®	60 (1,524)	8 (203.2)	1.125 (28.6)	58 (26)	0035260	0035464	0035705
2832 SS-540 Magnum®	60 (1,524)	8 (203.2)	1.125 (28.6)	60 (27)	0035260	0035464	0035705

Performance:

Performance specifications shown on the front side of this document are nominal values. Individual element permeate flows may vary +/-15% from the values shown. Minimum rejection is 99.3% at the conditions shown.

System performance should be predicted using KMS' ROPRO® design software. Element performance is based on the nominal values shown.

System operating data should be normalized and key performance parameters tracked using KMS' NORMPRO® software.

Operating Limits:

- Operating Pressure: Maximum operating pressure is 1,200 psi (8,275 kPa). Typical operating pressure for TFC-SS systems is in the range of 750 psi (5,175 kPa) to 950 psi (6,555 kPa). Actual operating pressure is dependent upon system flux rate (appropriate for feed source) as well as feed salinity, recovery and temperature conditions.
- Permeate Pressure: Permeate pressure should not exceed feed-concentrate pressure by more than 5 psi (34 kPa) at any time (on-line, off-line and during transition).
- Differential Pressure: Maximum differential pressure limits are 10 psi (69 kPa) for a 40" (1,016 mm) long element and 15 psi (104 kPa) for a 60" (1,524 mm) long element. Maximum differential pressure for any length pressure vessel is 60 psi (414 kPa).
- Temperature: Maximum operating temperature is 113˚F (45˚C). Maximum cleaning temperature is 113˚F (45˚C).
- pH: Allowable range for continuous operation is pH 4-11. Allowable range for short term cleaning is pH 2.5-11.
- Turbidity and SDI: Maximum feed turbidity is 1 NTU. Maximum feed Silt Density Index (SDI) is 5.0 (15 minute test). Experience has shown that feedwater with turbidity greater than 0.2 NTU generally results in frequent cleanings.
- Recovery: Maximum recovery is site and application specific. In general, single element recovery is approximately 7% for 40" (1,016 mm) long and 11% for 60" (1,524 mm) long elements. Recovery limits should be determined using KMS' ROPRO program.

Chemical Tolerance:

- Chlorine: Intentional exposure of TFC-SS membrane to free chlorine or other oxidizing agents such as permanganate, ozone, bromine and iodine is not recommended. TFC-SS membrane has a free chlorine tolerance of approximately 1,000 ppm-hours based on testing at 77˚F (25˚C), pH 8. This tolerance may be significantly reduced if catalyzing metals such as iron are present or if the pH and/or temperature are different. Sodium metabisulfite (without catalysts such as cobalt) is the preferred reducing agent. TFC-SS membrane has a chloramine tolerance of approximately 60,000 ppm-hours in the absence of free chlorine based on testing at 77˚F (25˚C), pH 8.
- Cationic (Positively Charged) Polymers and Surfactants: TFC-SS membrane may be irreversibly fouled if exposed to cationic (positively charged) polymers or surfactants. Exposure to these chemicals during operation or cleaning is not recommended.

Lubricants:

For element loading, use only approved silicone lubricant, water, or glycerin to lubricate O-rings and brine seals. The use of petroleum based lubricants or vegetable based oils may damage the element and void the warranty.

Service and Ongoing Technical Support:

KMS has an experienced staff of professionals available to assist endusers, and OEM's for optimization of existing systems and support with the development of new applications. Along with the availability of supplemental technical bulletins, KMS also offers a complete line of KOCHTREAT® and KOCHKLEEN® RO pretreatment and maintenance chemicals.

Koch Membrane Systems, Inc., www.kochmembrane.com
USA: 850 Main Street, Wilmington, MA 01887-3388, Telephone: 800-343-0499, Telephone: 978-657-4250, Fax: 978-657-5208
USA: 10054 Old Grove Road, San Diego, CA 92131, Telephone: 800-525-4369, Telephone: 858-695-3840, Fax 858-695-2176
UK: The Granary, Telegraph Street, Stafford, ST17 4AT, Telephone: +44-1785-272500, Fax: +44-1785-223149
AUSTRALIA: Ste. 6, Level 1/186-190 Church St., Parramatta, NSW 2150, Australia, Tel: +61-2-8833-4640, Fax: +61-2-9689-3615

FLUID SYSTEMS® TFC® - SS 8” PREMIUM ELEMENTS

High Rejection, Premium Seawater, RO Elements

PRODUCT DESCRIPTION

Membrane Chemistry:	Proprietary TFC polyamide
Membrane Type:	TFC-SS membrane
Construction:	Spiral-wound with fiberglass outerwrap
Applications:	Seawater desalination, high rejection premium RO membrane
Options:	Standard or high-area construction

SPECIFICATIONS

Part Numbers	Model	Permeate Flow gpd	Permeate Flow (m^3/d)	Chloride Rejection percent	Membrane Area ft^2	Membrane Area (m^2)
8282201	2822 SS-300 Premium	4,500	(17.0)	99.75 minimum	300	(27.9)
8282203	2822 SS-360 Premium	5,500	(20.8)	99.75 minimum	360	(33.4)

Test Conditions: 32,800 mg/l NaCl solution (isosmotic to ASTM standard) at 800 psi (5,520 kPa) applied pressure, 7% recovery 77°F (25°C) and pH 7.5.

OPERATING & DESIGN INFORMATION

Typical operating pressure:	750-950 psi (5,175 – 6,555 kPa)
Maximum operating pressure:	1,200 psi (8,275 kPa)
Maximum operating temperature:	113°F (45°C)
Maximum cleaning temperature:	113°F (45°C)
Maximum continuous free chlorine:	<0.1 mg/l
Allowable pH – continuous operation:	4 – 11
Allowable pH – short term cleaning:	2.5 – 11
Maximum differential pressure per element:	10 psi (69 kPa)
Maximum differential pressure per vessel:	60 psi (414 kPa)
Maximum feed turbidity:	1 NTU
Maximum feed SDI (15 minute):	5
Feed spacer thickness:	31/28 mil (0.8/0.7 mm)

PRODUCT DIMENSIONS AND WEIGHT

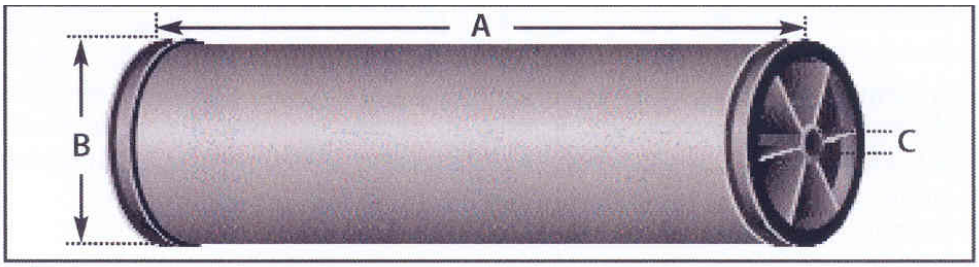

Model	A inches (mm)	B inches (mm)	C inches (mm)	Weight lbs (kg)	Part Numbers Interconnector	O-ring	Brine Seal
2822 SS-300 Premium	40 (1,016)	8 (203.2)	1.125 (28.6)	40 (18)	0035260	0035464	0035705
2822 SS-360 Premium	40 (1,016)	8 (203.2)	1.125 (28.6)	40 (18)	0035260	0035464	0035705

Performance:
Performance specifications shown on the front side of this document are nominal values. Individual element permeate flows may vary +20/-15% from the values shown. Minimum chloride ion rejection is 99.75% at the conditions shown.

System performance should be predicted using KMS' ROPRO® design software. Element performance is based on the nominal values shown.

System operating data should be normalized and key performance parameters tracked using KMS' NORMPRO® software.

Operating Limits:

- Operating Pressure: Maximum operating pressure is 1,200 psi (8,275 kPa). Typical operating pressure for TFC-SS systems is in the range of 750 psi (5,175 kPa) to 950 psi (6,555 kPa). Actual operating pressure is dependent upon system flux rate (appropriate for feed source) as well as feed salinity, recovery and temperature conditions.
- Permeate Pressure: Permeate pressure should not exceed feed-concentrate pressure by more than 5 psi (34 kPa) at any time (on-line, off-line and during transition).
- Differential Pressure: Maximum differential pressure is 10 psi (69 kPa) for a 40" (1,016 mm) long element. Maximum differential pressure for any length pressure vessel is 60 psi (414 kPa).
- Temperature: Maximum operating temperature is 113°F (45°C). Maximum cleaning temperature is 113°F (45°C).
- pH: Allowable range for continuous operation is pH 4-11. Allowable range for short term cleaning is pH 2.5-11.
- Turbidity and SDI: Maximum feed turbidity is 1 NTU. Maximum feed Silt Density Index (SDI) is 5.0 (15 minute test). Experience has shown that feedwater with turbidity greater than 0.2 NTU generally results in frequent cleanings.
- Recovery: Maximum recovery is site and application specific. In general, single element recovery is approximately 7%. Recovery limits should be determined using KMS' ROPRO program.

Chemical Tolerance:

- Chlorine: Intentional exposure of TFC-SS membrane to free chlorine or other oxidizing agents such as permanganate, ozone, bromine and iodine is not recommended. TFC-SS membrane has a free chlorine tolerance of approximately 1,000 ppm-hours based on testing at 77°F (25°C), pH 8. This tolerance may be significantly reduced if catalyzing metals such as iron are present or if the pH and/or temperature are different. Sodium metabisulfite (without catalysts such as cobalt) is the preferred reducing agent. TFC-SS membrane has a chloramine tolerance of approximately 60,000 ppm-hours in the absence of free chlorine based on testing at 77°F (25°C), pH 8.
- Cationic (Positively Charged) Polymers and Surfactants: TFC-SS membrane may be irreversibly fouled if exposed to cationic (positively charged) polymers or surfactants. Exposure to these chemicals during operation or cleaning is not recommended.

Lubricants:
For element loading, use only the recommended silicone lubricant (or approved equivalent), water or glycerin to lubricate O-rings and brine seals. The use of petroleum based lubricants or vegetable based oils may damage the element and void the warranty.

Service and Ongoing Technical Support:
KMS has an experienced staff of professionals available to assist endusers and OEM's for optimization of existing systems and support with the development of new applications. Along with the availability of supplemental technical bulletins, KMS also offers a complete line of KOCHTREAT® and KOCHKLEEN® RO pretreatment and maintenance chemicals.

Koch Membrane Systems, Inc., www.kochmembrane.com
USA: 850 Main Street, Wilmington, MA 01887-3388, Telephone: 800-343-0499, Telephone: 978-657-4250, Fax: 978-657-5208
USA: 10054 Old Grove Road, San Diego, CA 92131, Telephone: 800-525-4369, Telephone: 858-695-3840, Fax 858-695-2176
UK: The Granary, Telegraph Street, Stafford, ST17 4AT, Telephone: +44-1785-272500, Fax: +44-1785-223149
AUSTRALIA: Ste. 6, Level 1/186-190 Church St., Parramatta, NSW 2150, Australia, Tel: +61-2-8833-4640, Fax: +61-2-9689-3615

FILMTEC Membranes

Basics of RO and NF: Element Construction

Element Construction

FILMTEC™ membranes are thin film composite membranes packed in a spiral wound configuration. Spiral wound designs offer many advantages compared to other module designs, such as tubular, plate and frame and hollow fiber module design for most of the reverse osmosis applications in water treatment. Typically, a spiral wound configuration offers significantly lower replacement costs, simpler plumbing systems, easier maintenance and greater design freedom than other configurations, making it the industry standard for reverse osmosis and nanofiltration membranes in water treatment.

The construction of a spiral wound FILMTEC membrane element as well as its installation in a pressure vessel is schematically shown in Figure 1.13. A FILMTEC element contains from one, to more than 30 membrane leafs, depending on the element diameter and element type. Using FilmTec's unique automated manufacturing process, each leaf is made of two membrane sheets glued together back-to-back with a permeate spacer in-between them. FilmTec's automated process produces consistent glue lines about 1.5 in (4 cm) wide that seal the inner (permeate) side of the leaf against the outer (feed/concentrate) side. There is a side glue line at the feed end and at the concentrate end of the element, and a closing glue line at the outer diameter of the element. The open side of the leaf is connected to and sealed against the perforated central part of the product water tube, which collects the permeate from all leaves. The leaves are rolled up with a sheet of feed spacer between each of them, which provides the channel for the feed and concentrate flow. In operation, the feed water enters the face of the element through the feed spacer channels and exits on the opposite end as concentrate. A part of the feed water – typically 10-20 % – permeates through the membrane into the leaves and exits the permeate water tube.

When elements are used for high permeate production rates, the pressure drop of the permeate flow inside the leaves reduces the efficiency of the element. Therefore FILMTEC elements have been optimized with a higher number of shorter membrane leaves and thin and consistent glue lines. The FILMTEC element construction also optimizes the actual active membrane area (the area inside the glue lines) and the thickness of the feed spacer. Element productivity is enhanced by high active area while a thick feed spacer reduces fouling and increases cleaning success. Such precision in element manufacture can only be achieved by using advanced automated precision manufacturing equipment. A cross-section of a permeate water tube with attached leaves is shown in Figure 1.14.

In membrane systems the elements are placed in series inside of a pressure vessel. The concentrate of the first element becomes the feed to the second element and so on. The permeate tubes are connected with interconnectors (also called couplers), and the combined total permeate exits the pressure vessel at one side (sometimes at both sides) of the vessel.

Form No. 609-02007-504

FILMTEC Membranes

Basics of RO and NF: FILMTEC Membrane Safe for Use in Food Processing

FILMTEC Membrane Safe for Use in Food Processing

Under the food additive provision of the Federal Food, Drug and Cosmetic Act, contact surfaces of components used in the production of food, including water, must comply with established regulations set forth by the U.S. Food and Drug Administration (FDA) in order to receive approval for safe use. In accordance with its long-standing commitment to quality, petitions were submitted to the FDA for the FILMTEC™ FT30 reverse osmosis membrane and all FILMTEC NF membranes for evaluation and approval.

The procedure for FDA approval is rigorous and thorough. First, a food additive petition must be submitted to the FDA. This petition includes information about the chemical identity and composition of the component and its physical, chemical and biological properties. The petitioner must also describe the proposed use of the component, including all directions, recommendations and suggestions. Data must be included which establish that the component will have the intended effect when used in this manner. In addition, experimental data must show the extent that the component directly or indirectly affects the safety of the food with which it comes in contact. The petition must finally analyze the environmental impact of the manufacturing process and the ultimate use of the component.

The FDA evaluates the petition for the specific biological properties of the component and its demonstrated safety for the proposed use. The data and experimental methods are also evaluated for adequacy and reliability. As a guideline for this evaluation, the FDA uses the principles and procedures for establishing the safety of food additives stated in current publications of the Nation Academy of Sciences-National Research Council.

Reverse Osmosis and nanofiltration membranes received FDA clearance for use in processing liquid foods and in purifying water for food applications. This clearance is published in the Code of Federal Regulations under Title 21, Section 177.2550, Reverse Osmosis Membranes. The FT30 reverse osmosis membrane as well as all nanofiltration membranes comply with this regulation.

Form No. 609-02006-504

FILMTEC Membranes
For more information about FILMTEC membranes, call the Dow Liquid Separations business:
North America: 1-800-447-4369
Latin America: (+55) 11-5188-9222
Europe: (+32) 3-450-2240
Pacific (ex. China): +800-7776-7776
China: +10-800-600-0015
http://www.filmtec.com

Notice: The use of this product in and of itself does not necessarily guarantee the removal of cysts and pathogens from water. Effective cyst and pathogen reduction is dependent on the complete system design and on the operation and maintenance of the system.

Notice: No freedom from any patent owned by Seller or others is to be inferred. Because use conditions and applicable laws may differ from one location to another and may change with time, Customer is responsible for determining whether products and the information in this document are appropriate for Customer's use and for ensuring that Customer's workplace and disposal practices are in compliance with applicable laws and other governmental enactments. Seller assumes no obligation or liability for the information in this document. NO WARRANTIES ARE GIVEN; ALL IMPLIED WARRANTIES OF MERCHANTABILITY OR FITNESS FOR A PARTICULAR PURPOSE ARE EXPRESSLY EXCLUDED.

Form No. 609-02006-504

FILMTEC Membranes

FILMTEC SW30HR LE-400 Seawater Reverse Osmosis Element

Features

FilmTec offers various premium seawater reverse osmosis (RO) elements designed to reduce capital and operation cost of seawater RO systems. FILMTEC™ products combine premium membrane performance with automated precision fabrication and maximize system output to unprecedented performance.

FILMTEC SW30HR LE-400 element (named SW30HR LE-380 until June, 2004) offers very high productivity and rejection, enabling the lowest total cost of water for seawater desalination. Benefits of FILMTEC SW30HR LE-400 include:

- Enables systems to be designed and operated to optimize operating cost through lower energy consumption or to optimize capital cost through higher productivity at lower operating fluxes.
- Highest NaCl and boron rejection to help meet World Health Organization (WHO) and other drinking water standards.
- Can effectively be used in permeate staged seawater desalination systems without impairing the performance of the downstream stage.
- High performance over the operating lifetime without the use of oxidative post-treatments like many competitive products. This is one reason FILMTEC elements are more durable and may be cleaned more effectively over a wider pH range (1-12) than other RO elements.
- Automated, precision fabrication with a greater number of shorter membrane leaves reduces the effect of overall fouling and maximizes element efficiency, lowering your cost of operation.

Product Specifications

Product	Part number	Active area ft^2 (m^2)	Maximum operating pressure psig (bar)	Permeate flow rate gpd (m^3/d)	Stabilized boron rejection %	Minimum salt rejection %	Stabilized salt rejection %
SW30HR LE-400	217822	400 (37)	1,200 (83)	7,500 (28)	91	99.60	99.75

1. The above values are normalized to the following conditions: 32,000 ppm NaCl, 5 ppm boron, 800 psi (5.5 MPa), 77°F (25°C), pH 8, 8% recovery.
2. Permeate flows for individual elements may vary +/-15%.
3. Product specifications may vary slightly as improvements are implemented.
4. Active area guaranteed +/-5%. Active area as stated by FilmTec is not comparable to the nominal membrane area figure often stated by some element suppliers. Measurement method described in Form No. 609-00434.

Figure 1

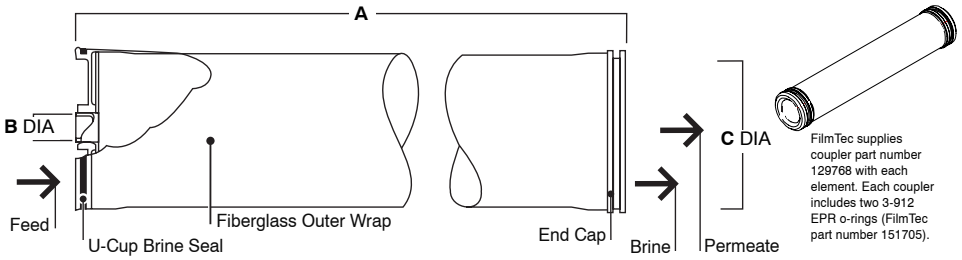

Product	Feed Spacer (mil)	Dimensions – Inches (mm) A	B	C
SW30HR LE-400	28	40 (1,016)	1.125 (29)	7.9 (201)

1. Refer to FilmTec Design Guidelines for multiple-element systems.
2. Elements fit nominal 8-inch (203 mm) I.D. pressure vessel.

1 inch = 25.4 mm

Operating Limits

• Membrane Type	Polyamide Thin-Film Composite
• Maximum Operating Temperature[a]	113°F (45°C)
• Maximum Element Pressure Drop	15 psig (1.0 bar)
• pH Range, Continuous Operation[a]	2 – 11
• pH Range, Short-Term Cleaning (30 min.)[b]	1 – 12
• Maximum Feed Silt Density Index (SDI)	SDI 5
• Free Chlorine Tolerance[c]	<0.1 ppm

a. Maximum temperature for continuous operation above pH 10 is 95°F (35°C).
b. Refer to Cleaning Guidelines in specification sheet 609-23010.
c. Under certain conditions, the presence of free chlorine and other oxidizing agents will cause premature membrane failure. Since oxidation damage is not covered under warranty. FilmTec recommends removing residual free chlorine by pretreatment prior to membrane exposure. Please refer to technical bulletin 609-22010 for more information.

Important Information

Proper start-up of reverse osmosis water treatment systems is essential to prepare the membranes for operating service and to prevent membrane damage due to overfeeding or hydraulic shock. Following the proper start-up sequence also helps ensure that system operating parameters conform to design specifications so that system water quality and productivity goals can be achieved.

Before initiating system start-up procedures, membrane pretreatment, loading of the membrane elements, instrument calibration and other system checks should be completed.

Please refer to the application information literature entitled “Start-Up Sequence” (Form No. 609-00298) for more information.

Operation Guidelines

Avoid any abrupt pressure or cross-flow variations on the spiral elements during start-up, shutdown, cleaning or other sequences to prevent possible membrane damage. During start-up, a gradual change from a standstill to operating state is recommended as follows:

- Feed pressure should be increased gradually over a 30-60 second time frame.
- Cross-flow velocity at set operating point should be achieved gradually over 15-20 seconds.
- Permeate obtained from first hour of operation should be discarded.

General Information

- Keep elements moist at all times after initial wetting.
- If operating limits and guidelines given in this bulletin are not strictly followed, the limited warranty will be null and void.
- To prevent biological growth during prolonged system shutdowns, it is recommended that membrane elements be immersed in a preservative solution.
- The customer is fully responsible for the effects of incompatible chemicals and lubricants on elements.
- Maximum pressure drop across an entire pressure vessel (housing) is 50 psi (3.4 bar).
- Avoid static permeate-side backpressure at all times.

FILMTEC Membranes
For more information about FILMTEC membranes, call the Dow Liquid Separations business:
North America: 1-800-447-4369
Latin America: (+55) 11-5188-9222
Europe: (+32) 3-450-2240
Pacific (ex. China): +800-7776-7776
China: +10-800-600-0015
http://www.filmtec.com

Form No. 609-00425-804

FILMTEC Membranes

Basics of RO and NF: Element Characteristics

FILMTEC™ elements cover a wide range of applications. They can be characterized by membrane type, outer wrap, size and performance. The nomenclature of FILMTEC elements provides some of this information.

Nomenclature

Elements less than 8 inches in diameter are named according to Table 1.3. The first part of the name indicates the membrane and it's typical use; for example, BW30 is a Brackish Water FT30 membrane used for brackish water. The second part of the name indicates the element size; for example 2540 is an element with a diameter of 2.5 inches and a length of 40 inches.

Table 1.3 Nomenclature of elements <8 inches

The element nomenclature for FILMTEC elements is for example as follows:

```
TW   30      -     40      40
 |    |            |       |_____ Length of Element in inches
 |    |            |
 |    |            |____Diameter of Element, divided by 10, in inches
 |    |
 |    |_________ FT30 - Element Family
 |
 |________ TW - Tap Water
           BW - Brackish Water
           SW - Seawater
           SWHR - Seawater High Rejection
```

Eight-inch elements are always 8 inches in diameter and 40 inches in length. They are named according to the actual active membrane area in square feet, for example the BW30-400 element has an active membrane area of 400 square feet.

Some element types have an extension to their name, e.g. FF or FR. These stand for special element or membrane features:

FR: Fouling Resistant
FF: Fullfit

Membrane

The following membrane types are used with FILMTEC elements:

- NF270 – high productivity nanofiltration membrane for removal of organics with medium salt and hardness passage
- NF200 – nanofiltration membrane for high atrazine and TOC rejection, medium calcium passage
- NF90 – nanofiltration membrane for 90% salt removal, high removal of iron, pesticides, herbicides, TOC
- NF – nanofiltration membrane used in non-water applications
- TW30 – High rejection brackish water FT30 membrane, typically used for Tap Water RO
- TW30LP – 'Low Pressure' version of the TW30 membrane
- BW30 – High rejection Brackish Water FT30 membrane for brackish water RO
- RO – Reverse Osmosis membrane used in fullfit elements for sanitary applications
- HSRO – Heat Sanitizable version of the RO membrane used in fullfit elements
- BW30LE – 'Low Energy' version of the BW30 membrane
- SG30 – Semiconductor Grade FT30 membrane for ultrapure water RO
- SG30LE – Low Energy version of the SG30 membrane
- XLE – EXtremely Low Energy RO membrane for lowest pressure brackish water RO
- SW30 – SeaWater RO membrane, typically used for low salinity or cold seawater RO and high salinity brackish water RO
- SW30HR – SeaWater RO membrane with High salt Rejection, typically used for single pass seawater desalination
- SW30HRLE - SeaWater RO membrane with High salt Rejection, typically used for Low Energy seawater desalination
- SW30XLE – membrane for SeaWater desalination with eXtremely Low Energy consumption

Element Size

The standard length of a membrane element is 40 inches (1,016 mm). For small and compact systems shorter elements are available, such as 14 inches (356 mm) and 21 inches (533 mm).

Home Drinking Water RO elements are 12 inches long and 1.8 inches in diameter to fit into nominal 2-inch I.D. housings.

The standard diameter of FILMTEC elements is 2.5, 4 and 8 inches (61 – 99 – 201 mm). They are sized to fit into 2.5, 4 and 8 inch pressure vessels respectively.

Element Outer Wrap

The outer wrap of FILMTEC elements is either tape, fiberglass or a polypropylene mesh. Tap water and home drinking water RO elements are tape wrapped, all other elements except fullfit elements are fiberglass wrapped. Fiberglass adds more physical strength to the element for operation under harsh conditions. Fullfit elements have a designed bypass during operation to minimize stagnant areas; such elements are optimal for applications requiring a sanitary design.

Element Performance

The performance of all FILMTEC elements is stated on their respective product information data sheets. An overview about the available sizes and their flow performance range is shown in Table 1.4.

Table 1.4 FILMTEC element types

Element type	Diameter (inch)	Permeate flow[1] at standard test conditions (GPD)	(l/h)	Maximum operating pressure (bar)	(PSI)
NF270	2.5, 4, 8	850 - 14,700	134 - 2,300	41	600
NF200	2.5, 4, 8	460 - 8,000	73 - 1,260	41	600
NF90	2.5, 4, 8	525 - 10,300	83 - 1,620	41	600
TW30	1.8	24 - 100	3.8 - 16	21	300
TW30, TW30HP	2, 2.5, 4	100 - 3,200	16 - 500	41	600
BW30	2.5, 4, 8	750 - 10,500	120 - 1,660	41	600
BW30LE	4, 8	2,000 - 11,500	320 - 1,830	41	600
XLE	2.5, 4, 8	330 - 13,000	52 - 2,040	41	600
SW30	2.5, 4	150 - 1,950	24 - 300	69	1,000
SW30HR	8	6,000	950	84	1,200
SW30HRLE	8	7,500	1,200	84	1,200
SW30XLE	8	9,000	1,400	69	1,000

[1] Varying with different element dimensions and test conditions.

The standard element test conditions vary depending on the membrane type. Table 1.5 summarizes the test conditions used to specify the performance of FILMTEC elements.

Table 1.5 Standard test conditions for FILMTEC elements

Element type	Feedwater	Temperature	Pressure psi	Pressure bar	pH	Recovery	Test time
NF200 NF270 NF90	$MgSO_4$, 2,000 ppm	77°F (25°C)	70	4.8	8	15%	20 min.
NF200 NF270	$CaCl_2$, 500 ppm	77°F (25°C)	70	4.8	8	15%	20 min.
NF90	NaCl, 2,000 ppm	77°F (25°C)	70	4.8	8	15%	20 min.
LPTW	Tapwater, 250 ppm	77°F (25°C)	50	3.45	8	15%	20 min.
BW30LE	NaCl, 2,000 ppm	77°F (25°C)	150	10.3	8	15%	20 min.
XLE	NaCl, 500 ppm	77°F (25°C)	100	6.9	8	15%	20 min.
TW30 BW30	NaCl, 2,000 ppm	77°F (25°C)	225	15.5	8	15%	20 min.
SW30	NaCl, 32,000 ppm	77°F (25°C)	800	55	8	10%†	20 min.
SW30HR	NaCl, 32,000 ppm	77°F (25°C)	800	55	8	8%	20 min.

† 8% for 2.5 inch and 4 inch diameter elements.

FILMTEC Membranes
For more information about FILMTEC membranes, call the Dow Liquid Separations business:
North America: 1-800-447-4369
Latin America: (+55) 11-5188-9222
Europe: (+32) 3-450-2240
Pacific (ex. China): +800-7776-7776
China: +10-800-600-0015
http://www.filmtec.com

Form No. 609-02008-504

Figure 1.13 Construction of spiral wound FILMTEC RO membrane element

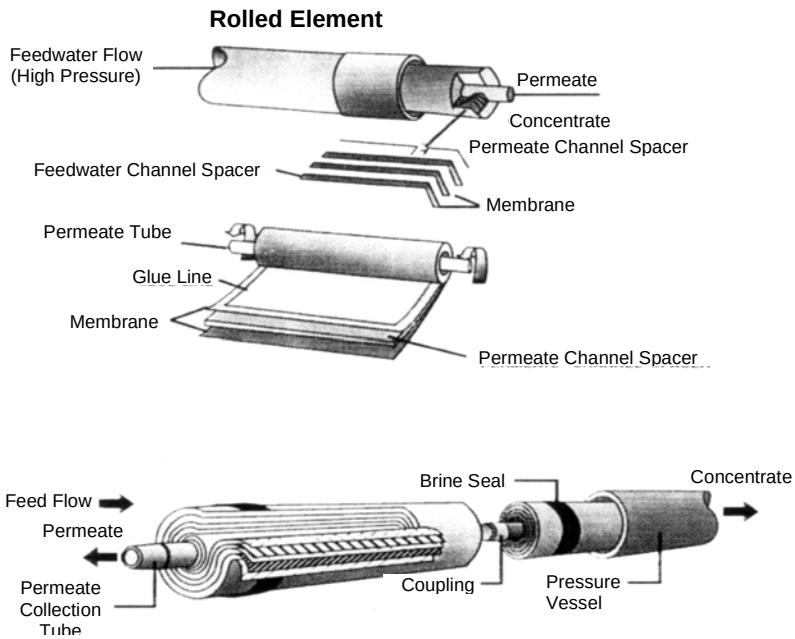

Figure 1.14 Cross-section of a permeate water tube through the side glue lines of the leaves (arrows indicate even spacing of leaves)

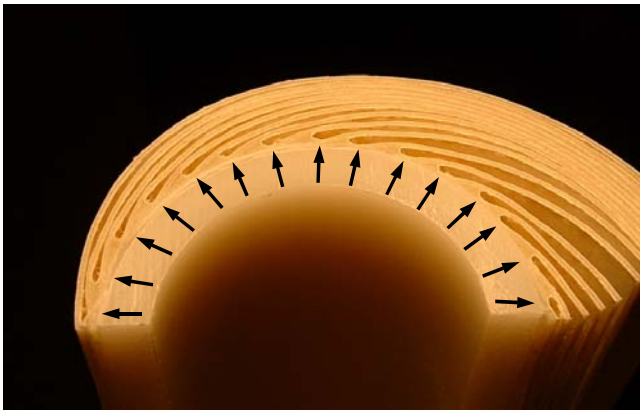

FILMTEC Membranes
For more information about FILMTEC membranes, call the Dow Liquid Separations business:
North America: 1-800-447-4369
Latin America: (+55) 11-5188-9222
Europe: (+32) 3-450-2240
Pacific (ex. China): +800-7776-7776
China: +10-800-600-0015
http://www.filmtec.com

Form No. 609-02007-504

FILMTEC Membranes

FILMTEC SW30HR-380 High Rejection Seawater RO Element

Features

The FILMTEC™ SW30HR-380 is a premium grade seawater reverse osmosis element featuring both high active area and high salt rejection to offer the best long-term economics for seawater desalination systems.

- FILMTEC SW30HR-380 delivers the highest boron rejection to help customers meet World Health Organization (WHO) and other drinking water standards.
- FILMTEC SW30HR-380 elements deliver high performance over their operating lifetime without the use of oxidative post-treatments like many competitive products. This is one reason why FILMTEC elements are more durable and may be cleaned more effectively over a wide pH range than other RO elements.
- Automated, precision fabrication with a greater number of shorter membrane leaves, reduces the overall effect of fouling and maximizes membrane efficiency.

Product Specifications

Product	Part Number	Active Area ft^2 (m^2)	Applied Pressure psig (bar)	Permeate Flow Rate gpd (m^3/d)	Stabilized Salt Rejection (%)
SW30HR-380	135137	380 (35)	800 (55)	6,000 (23)	99.7

1. Permeate flow and salt rejection based on the following test conditions: 32,000 mg/L NaCl, pressure specified above, 77°F (25°C), pH 8 and 8% recovery.
2. Permeate flows for individual elements may vary +/-15%.
3. Minimum salt rejection is 99.6%.
4. Sales specifications may vary as design revisions take place.
5. Feed spacer is 28 mil.

Figure 1

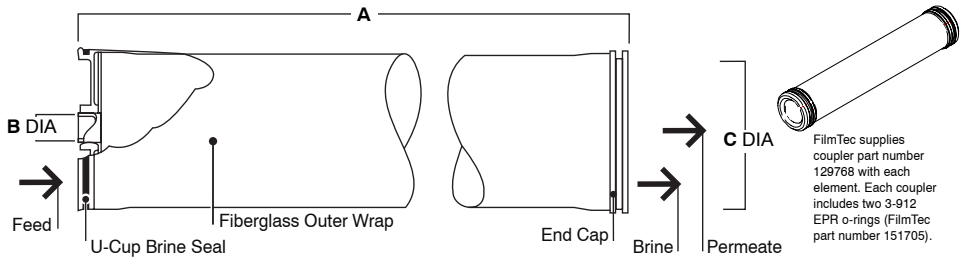

Dimensions – Inches (mm)

Product	A	B	C
SW30HR-380	40.0 (1,016)	1.125 (29)	7.9 (201)

1. Refer to FilmTec Design Guidelines for multiple-element applications and recommended element recovery rates for various feed sources. 1 inch = 25.4 mm
2. SW30HR-380 fits nominal 8.00-inch (203 mm) I.D. pressure vessel.

Operating Limits

- Membrane Type — Polyamide Thin-Film Composite
- Maximum Operating Temperature[a] — 113°F (45°C)
- Maximum Operating Pressure — 1,000 psig (69 bar)[d]
- Maximum Pressure Drop — 15 psig (1.0 bar)
- pH Range, Continuous Operation[a] — 2 – 11
- pH Range, Short-Term Cleaning (30 min.)[b] — 1 – 12
- Maximum Feed Silt Density Index — SDI 5
- Free Chlorine Tolerance[c] — <0.1 ppm

[a] Maximum temperature for continuous operation above pH 10 is 95°F (35°C).
[b] Refer to Cleaning Guidelines in specification sheet 609-23010.
[c] Under certain conditions, the presence of free chlorine and other oxidizing agents will cause premature membrane failure. Since oxidation damage is not covered under warranty, FilmTec recommends removing residual free chlorine by pretreatment prior to membrane exposure. Please refer to technical bulletin 609-22010 for more information.
[d] Operation at pressures up to 1,200 psig (83 bar) is allowable under certain conditions. Consult your Dow representative for advice on applications above 1,000 psig (69 bar).

Important Information

Proper start-up of reverse osmosis water treatment systems is essential to prepare the membranes for operating service and to prevent membrane damage due to overfeeding or hydraulic shock. Following the proper start-up sequence also helps ensure that system operating parameters conform to design specifications so that system water quality and productivity goals can be achieved.

Before initiating system start-up procedures, membrane pretreatment, loading of the membrane elements, instrument calibration and other system checks should be completed.

Please refer to the application information literature entitled “Start-Up Sequence” (Form No. 609-00298) for more information.

Operation Guidelines

Avoid any abrupt pressure or cross-flow variations on the spiral elements during start-up, shutdown, cleaning or other sequences to prevent possible membrane damage. During start-up, a gradual change from a standstill to operating state is recommended as follows:

- Feed pressure should be increased gradually over a 30-60 second time frame.
- Cross-flow velocity at set operating point should be achieved gradually over 15-20 seconds.
- Permeate obtained from first hour of operation should be discarded.

General Information

- Keep elements moist at all times after initial wetting.
- If operating limits and guidelines given in this bulletin are not strictly followed, the limited warranty will be null and void.
- To prevent biological growth during prolonged system shutdowns, it is recommended that membrane elements be immersed in a preservative solution.
- The customer is fully responsible for the effects of incompatible chemicals and lubricants on elements.
- Maximum pressure drop across an entire pressure vessel (housing) is 50 psi (3.4 bar).
- Avoid permeate-side backpressure at all times.

FILMTEC Membranes
For more information about FILMTEC membranes, call the Dow Liquid Separations business:

North America:	1-800-447-4369
Latin America:	(+55) 11-5188-9222
Europe:	(+32) 3-450-2240
Pacific (ex. China):	+800-7776-7776
China:	+10-800-600-0015

http://www.filmtec.com

Form No. 609-00390-204

FILMTEC Membranes

New Desalination System Produces High-Quality, Low-Boron Potable Water

Site Information

Location

Weihai City, China

Purpose

Turn seawater into process water and drinking water for plant while meeting WHO's limit of 0.5 mg/L boron.

Comparative Performance

Using a two-pass desalination process, boron levels were cut to less than 0.5 mg/L along with other feed water components meeting specifications.a

FILMTEC™ BW30-400 elements are used in the second-pass stage of the desalination process at the Huaneng Weihai Power Plant. (Photo courtesy of Huaneng Weihai Power Plant.)

With fresh water in short supply, the Huaneng Weihai Power Plant turned to an abundant supply of seawater to produce both process water for the plant and drinking water for plant employees. A significant challenge to developing the desalination process was meeting the World Health Organization's limit of 0.5 mg/L boron. Officials at the plant decided on a two-pass system using FILMTEC™ membranes, cutting the total ion level to 4 mg/L or less, with boron at less than 0.5 mg/L.

Introduction

Since its founding in 1987, Weihai City in the Shandong Province of China has grown into a cultural and industrial center of over 2.4 million inhabitants. With six commercial ports and over 100 fishing ports, Weihai is an active participant in domestic and international markets and is considered one of China's most important coastal cities. The modern urban environment and beautiful natural scenery combine to make Weihai very attractive to visitors, hosting over 34 million tourists since the late 1980s.

However, Weihai's success is also the source of a significant problem—the supply of fresh water. The burgeoning population and industrial facilities are placing an increasingly heavy strain on Weihai's limited fresh water sources. Recognizing the need for an alternative, less expensive process water supply, the Huaneng Weihai Power Plant, which provides power for Weihai City and surrounding areas, turned to the sea.

Membrane desalination is becoming widely accepted, and this technology is being challenged to purify water to increasingly stringent standards. One of the major challenges today is the removal of boron. The World Health Organization (WHO) has placed a provisional limit of 0.5 mg/L of boron in potable water. A number of desalination facilities are struggling to meet this limit as they deal with locally high levels of boron in sea water and the limited ability of conventional treatment methods to remove it. To address this challenge, the Huaneng Weihai Power Plant decided to use FILMTEC reverse osmosis (RO) membranes.

FILMTEC Membranes and Boron Removal

Seawater has an average boron concentration of 4.5 mg/L.[1] The level varies from location to location depending on the level of naturally occurring boron in the surrounding land mass and the boron content of waste water discharged to the sea.

Boron, like silica, is difficult to remove by conventional RO treatments because it forms a weak acid. It does not dissociate until a pH of about 9.4, which is higher than the neutral pH at which RO membranes generally operate. Depending on the feed water composition, high pH operation may lead to scaling problems that affect operation of the process and increase the cleaning frequency.

The approach recommended to ensure removal of boron in addition to other compounds was to install a two-pass RO pretreatment system. The first stage uses FILMTEC SW30HR-380 elements, which have the highest active area of seawater membrane elements on the market, purifying 22.7 m^3/day (6,000 gpd) of water with a minimum rejection of 99.7% based on standard test conditions. The high capacity of these elements combined with low fouling behavior and a strong response to modern cleaning chemicals and methods, offers the best economics for large water purification applications.

The second stage uses FILMTEC BW30-400 elements. These elements feature both high productivity and high rejection. Average product water flow is 40 m^3/day (10,500 gpd) with a stabilized salt rejection of 99.5%.

Plant Operation

The primary goal of the plant is to produce water that meets drinking water standards and then further treat it for boiler make-up feed water. Figure 1 is a flow chart of the desalination process. Table 1 lists specific parameters of the RO units.

Figure 1. Flow chart of desalination process.

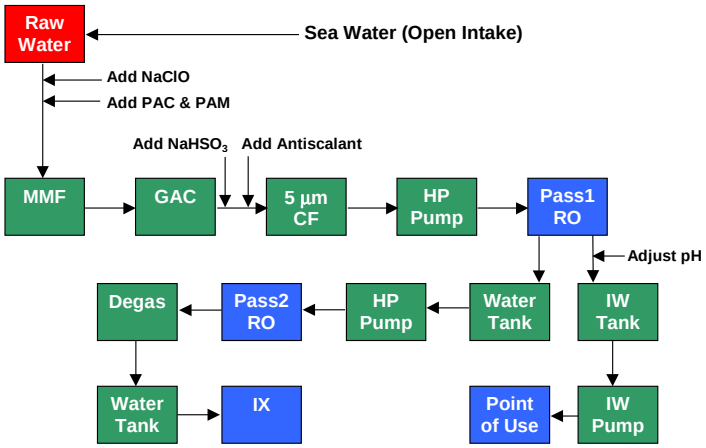

MMF: multimedia filter
GAC: granular activated carbon
IW: industrial water
CF: cartridge filter
HP: high pressure
IX: ion exchange

Table 1. Description of reverse osmosis system.

Parameter	Pass 1	Pass 2
Permeate flow, m^3/h (gpm)	2 × 52 (2 × 229)	2 × 40 (2 × 176)
System recovery (%)	40	75
Element type	SW30HR-380	BW30-400
Array ratio	17	4:3
Number of elements	6/PV	6/PV
Energy cost (kWh/m^3)	4.68	0.96

Plant Performance

The desalination plant produces very high quality water with low total dissolved solids (TDS), total organic carbon (TOC), silica, and boron (Figure 2, Table 2). This low level of boron is achieved without increasing the pH for the second stage of the process. Eighty percent (80%) of the water is used as boiler make-up feed. Twenty percent (20%) goes to the homes of employees for drinking water and for other uses.

Figure 2. Levels of selected seawater components at various stages of the desalination process.

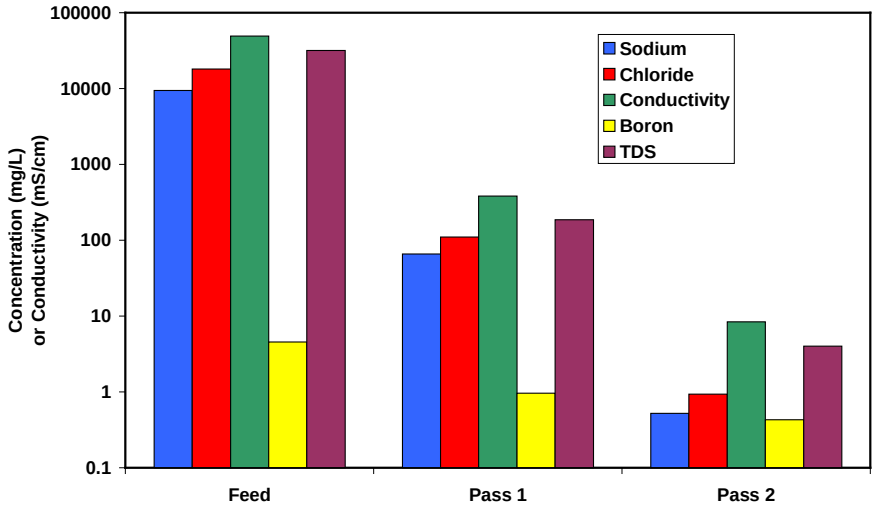

Table 2. Water quality after one and two passes within the desalination process.

Component	Feed	Pass 1 (mg/L)	Pass 2
Cations			
Calcium	382	0.53	—
Copper	0.05	<0.003	<0.003
Iron	0.15	<0.002	<0.002
Magnesium	1,100	0.99	0.17
Potassium	580	4.91	0.031
Sodium	9,400	66.0	0.52
Strontium	7.5	0.007	0.001
Zinc	0.075	<0.002	<0.002
Anions			
Alkalinity, as $CaCO_3$	106.8	1.2	—
Alkalinity, as HCO_3	130	1	—
Chloride	18,048	110	0.94
Sulfate	2,040	0.6	—
Other			
TOC	<2.5	1.0	0.1
Boron	4.57	0.97	0.43
Phosphorus	0.33	<0.012	<0.012
Silica	41.4	<0.79	<0.79

After a year and a half of operation, performance continues to be very stable (Figure 3). No cleaning has been required within that time period. The Huaneng Weihai plant is currently the largest sea water desalination demonstration project operating successfully in China.

Figure 3. Representative system flow and salt rejection with new desalination system.

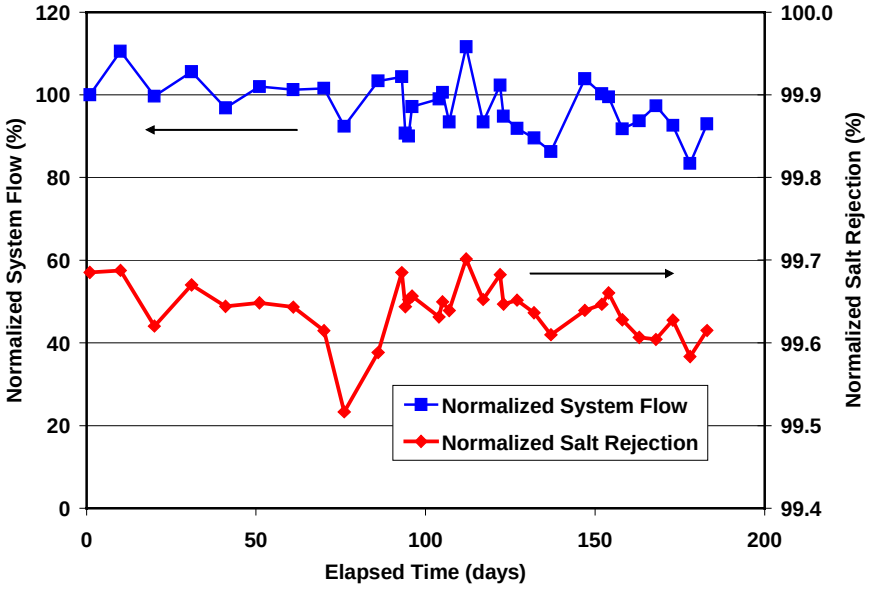

Conclusions

FILMTEC reverse osmosis elements used in a two-pass desalination process successfully cut boron levels to less than 0.5 mg/L without raising the pH of the feed. Other feed water components, such as sodium, chloride, conductivity, TOC, and TDS, are also reduced to levels that meet specifications for potable water. The process has been operating reliably for 1.5 years, with no cleaning required thus far.

References

[1] Lide, D.R., ed., *CRC Handbook of Chemistry and Physics*, 83rd ed., Boca Raton, FL, CRC Press, Inc., Section 14-16, 2002-2003.

FILMTEC Membranes
For more information about FILMTEC membranes, call the Dow Liquid Separations business:
North America: 1-800-447-4369
Latin America: (+55) 11-5188-9277
Europe: (+32) 3-450-2240
Japan: (+81) 3-5460-2100
Australia: (+61) 3-9226-3545
http://www.filmtec.com

Form No. 609-00389-603

FILMTEC Membranes

iLEC Interlocking Endcaps Make Seawater Desalination Processing Easier, Less Expensive

Site Information

Location:
Canary Islands, Spain

Purpose:
Evaluate performance of *iLEC*™ interlocking endcaps

Date of Installation:
March 2003

Comparative Performance:
FILMTEC™ elements with *iLEC* interlocking endcaps were easier to install, with no leakage, better permeate quality, less backpressure.

Insular de Aguas de Lanzarote S.A (Inalsa) uses FILMTEC elements to convert seawater to potable water. iLEC interlocking endcaps make the process easier and less expensive. (Photo courtesy of Inalsa)

Introduction

Lanzarote is the furthest east of the seven major Canary Islands, situated about 60 miles (100 km) off the coast of Africa. This popular tourist destination relies largely on reverse osmosis (RO) conversion of seawater to support its tourist, domestic, and agricultural activities. The RO operations on Lanzarote are owned and operated by Insular de Aguas de Lanzarote S.A. (Inalsa). Inalsa provides water production, distribution, and recycling services as well as wastewater treatment to more than 40,000 customers. Bottled water has been produced by Inalsa since 1990 and is marketed under the label Agua Chafariz.

An ongoing problem with Inalsa's RO elements involves leakage at the o-rings of element interconnectors, resulting in an average failure rate of three vessels per train per month at the Lanzarote III plant. With four trains in operation at the plant, the time dedicated to correcting o-ring leaks is approximately 18 man-hours per month.

FILMTEC elements with *iLEC* interlocking endcaps are designed to eliminate this problem by replacing the current sliding couplers with a single, stationary seal. A field test of twelve elements with *iLEC* endcaps was conducted in the Lanzarote III plant to determine the effect of this new element design on permeate quality, energy consumption, and ease of installation and removal.

Leakage Problems at Lanzarote III

Daily measurement of the permeate conductivity from each vessel in the plant is used to identify leakage problems as they occur. Vessels with particularly high conductivity are opened and unloaded. If no interconnector problems are found, the elements are tested individually. Between one and five vessels per month per train are found to have leaking interconnectors. Vessels with elevated but acceptable conductivity, which may have small or developing leaks, are monitored for signs of further deterioration.

Scheduled shutdowns are used to correct interconnector problems, so there is currently no lost production. However, exchanging elements in a vessel with interconnector problems is typically a three-person job that requires approximately 30 minutes. Given an average failure rate of three vessels per month, and considering all four trains at Lanzarote III, the time dedicated to correcting o-ring leaks is approximately 18 man-hours per month.

The five-year net present value (NPV) of this expenditure, given a $25 per hour labor cost and a 10% discount rate, is $21,000. If the plant were operating at capacity and subject to monetary losses during shutdown, the penalty would be far higher. Cost of materials represents another added expense because problem interconnectors are replaced with a custom-machined Inalsa sliding coupler that incorporates three o-rings at each end.

Benefits of *iLEC* Interlocking Endcaps

iLEC interlocking endcaps eliminate the need for multiple sliding seals between adjacent membrane elements, reducing the number of sealing surfaces per connection to a single, axially compressed o-ring. The result is a seal that is lubricant- and maintenance-free for the life of the element.

Long-term permeate quality is improved through prevention of o-ring leaks that occur as o-rings gradually become worn and abraded. In contrast to standard interconnectors, the possibility that o-rings will be pinched or damaged during installation, requiring the "debugging" of leaks upon start-up, is also eliminated.

The interlocking endcaps also remove the permeate-side flow restriction associated with the small flow diameter of conventional interconnectors, reducing energy costs. Figure 1 contrasts cross-section views of the small flow diameter and multiple sliding seals of the conventional interconnector with the larger diameter and fixed seal of the *iLEC* interlocking endcaps.

Figure 1. Cross-section views of the connection between two elements.

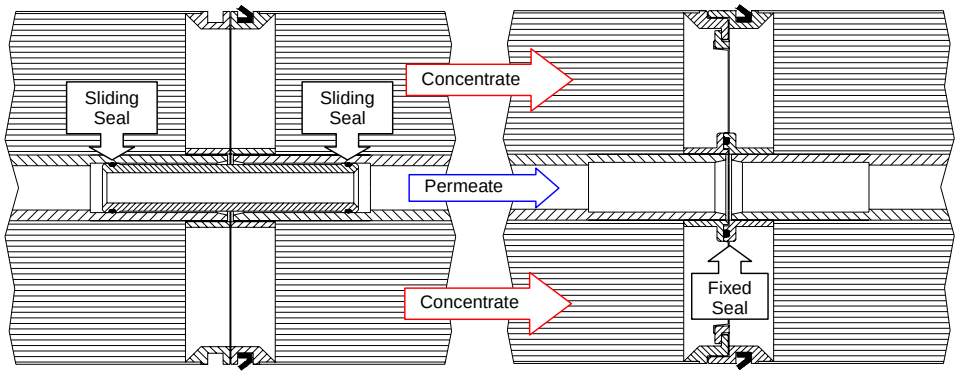

Conventional interconnector

iLEC interlocking endcap

* Trademark of The Dow Chemical Company
FILMTEC Membranes

Benefits of *iLEC* Interlocking Endcaps, cont.

Elements using *iLEC* interlocking endcaps are installed in minutes with a level of effort comparable to that associated with standard interconnectors. Special snap and alignment features provide tactile, audible, and visual feedback to inform the installer that a positive connection has been made between adjacent elements. Optional tools are available to make the handling of elements even easier (Figure 2).

Figure 2. A lightweight strap wrench (left) and element pulling tool (right) ease loading and unloading of elements using ***iLEC*** endcaps.

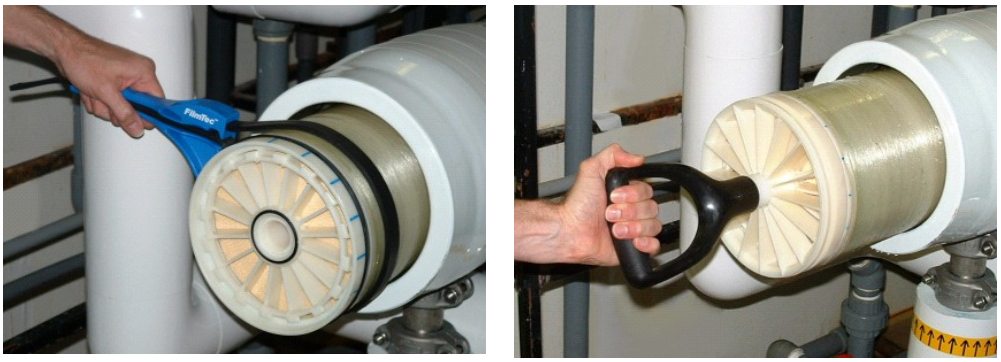

Plant Design

FILMTEC SW30HR-380 elements with *iLEC* interlocking endcaps were installed into two vessels at Lanzarote III, a plant that produces 20,000 m^3/d (5 million gpd) of permeate at a concentration of 430 ppm from four reverse osmosis trains. The vessels for this trial were located in the first and second stages of Train 4, a two-stage, 60 by 48 array of 8-inch pressure vessels. Each vessel holds six elements, which currently range in age from 4 to 12 years. The seawater feed is extracted from beach wells and pretreated using sand followed by cartridge filtration. The feed water contains 38,500 ppm TDS (total dissolved solids) and is adjusted to pH 7 using bisulfite.

Upon start-up of this evaluation, the train operated with a Stage 1 recovery of 34% and an overall recovery of 46%. The train produced approximately 255 m^3/h (1.6 million gpd) of permeate. The feed pressures for Stages 1 and 2 were 64.0 bar (929 psi) and 62.8 bar (912 psi), respectively. The temperature was 21°C (70°F).

In both of the test vessels, interlocking vessel adapters, like those shown in Figure 3, replaced the standard adapters provided by the vessel manufacturer. These eliminated two more sliding connections, just inside the leading and trailing elements in each vessel, and reduced the permeate flow restriction at the vessel permeate port.

Plant Design, cont.

Figure 3. Interlocking vessel adapters eliminate other potential leakage points within the vessel.

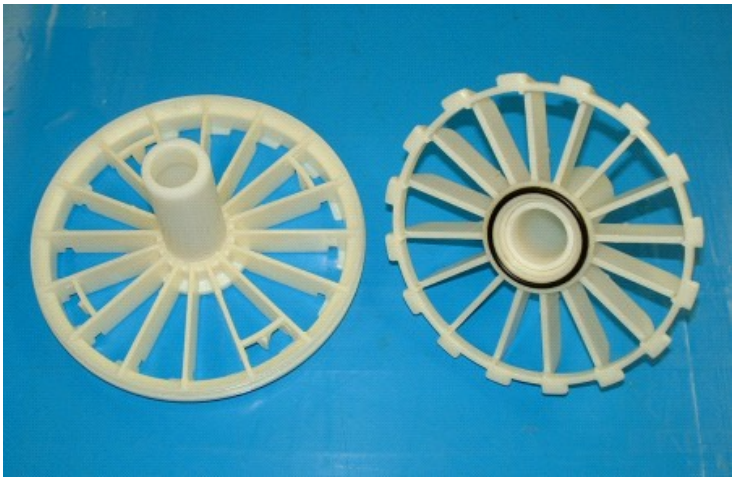

Plant Performance

The FILMTEC SW30HR-380 elements with *iLEC* endcaps commenced operation on March 12, 2003. Upon start-up, the vessel using *iLEC* endcaps in Stage 1 produced permeate containing 95 ppm TDS at an average flux of 20 Lmh (11.8 gfd), while the vessel using *iLEC* endcaps in Stage 2 produced a permeate with 270 ppm TDS at an average flux of 7.8 Lmh (4.6 gfd). Sustained performance at this level requires standard-test rejection of 99.85% and perfect sealing between elements.

To verify leak-free operation, a conductivity probing of elements with and without *iLEC* endcaps at Lanzarote III was conducted. The profiles shown in Figure 4 contrast a leak-free vessel using elements with *iLEC* endcaps with a neighboring vessel containing standard elements. A leaking o-ring between elements 1 and 2 in the standard vessel produced an obvious spike in conductivity and a degradation in permeate quality for that vessel.

Figure 4: A comparison of conductivity probe data for side-by-side vessels in Stage 1 of Train 4.

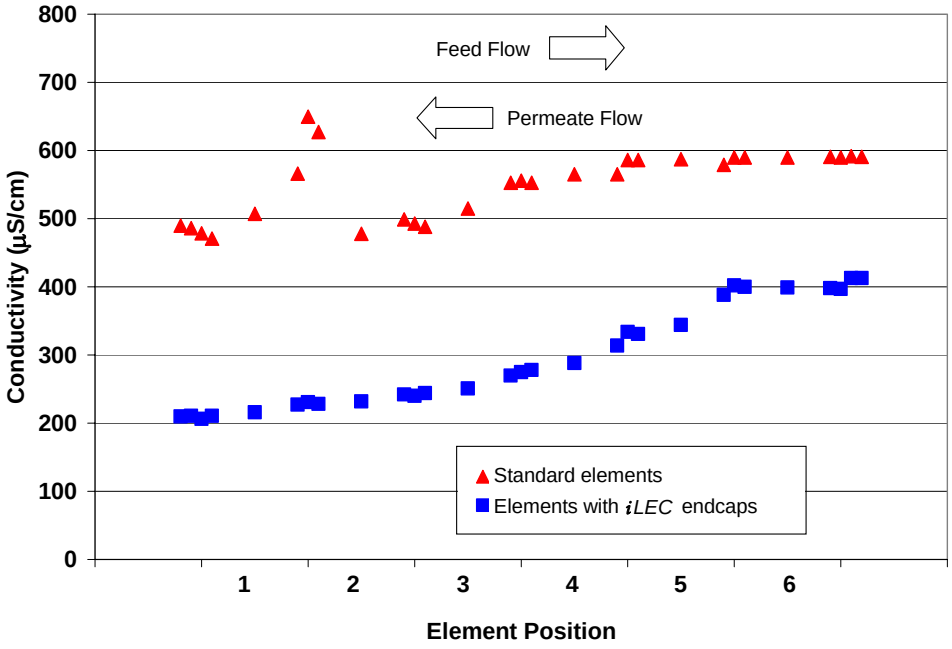

* Trademark of The Dow Chemical Company
FILMTEC Membranes

Plant Performance, cont.

Eliminating the standard couplers and vessel adapters provided a small boost in energy efficiency. The flow restriction of the couplers and adapters was measured inside a vessel in Stage 1. The backpressure imposed by the couplers and adapter, measured at the end of the vessel opposite the permeate port, was approximately 0.2 bar (3 psi). The corresponding result for the vessel using *iLEC* endcaps in Stage 1 was just 0.09 bar (1.3 psi).

Operating personnel at Lanzarote III were observed and questioned as they handled elements with *iLEC* endcaps for the first time. The time required for installation of the elements with *iLEC* was just 3 minutes per vessel, consistent with that required for loading standard elements. Regardless of the element type, a far greater period of up to 30 minutes was required to open and later close the same vessels.

Operating personnel rated the *iLEC* elements easier to install and "less work" than standard elements, in part because there was no need to handle interconnectors. Other comments from operating personnel included:

- Elements were easy to install, even without the strap wrench and element pulling tool.
- There should be no increase in the number of individuals, typically two to four, required for element installation and removal.
- Interlocking vessel adapters were readily attached to the first and last elements in both vessels using *iLEC* endcaps.
- The snapping action of the *iLEC* endcaps was easily detected, giving a good indication of a successful connection even in the noisy plant environment. Operators responded with "no doubt" when asked whether elements just installed were properly coupled together.

Conclusions

FILMTEC SW30HR-380 elements with *iLEC* interlocking endcaps were successfully installed in the Inalsa Lanzarote III reverse osmosis plant. Installation was easily accomplished with no need to search for leaks upon start-up. More than one year after installation, the vessels using *iLEC* are still leak-free, overall quality of the product water is improved, and permeate backpressure is reduced.

FILMTEC Membranes
For more information about FILMTEC membranes, call the Dow Liquid Separations business:
North America: 1-800-447-4369
Latin America: (+55) 11-5188-9222
Europe: (+32) 3-450-2240
Pacific (ex. China): +800-7776-7776
China: +10-800-600-0015
http://www.filmtec.com

Form No. 609-00466-504

6. OSMOSE REVERSA – BOMBAS DOSADORAS

Data Sheet

Series C

Electronic Metering Pumps

Configuration Data

Model C92 1 - 363SI

Control & Output Code

Manual Control

Speed (stroking frequency) and stroke length manually adjustable.

C10 --- 1.3 GPH (4.9 l/h) ... 300 psi (20.7 Bar)
C11 --- 2.5 GPH (9.5 l/h) ... 150 psi (10.3 Bar)
C12 --- 4.0 GPH (15.1 l/h) ... 100 psi (6.9 Bar)
C13 --- 8.0 GPH (30 l/h) ..... 60 psi (4.1 Bar)
C14 ---- 20 GPH (76 l/h) ..... 25 psi (1.7 Bar)

Instrument Responsive/Manual Control

Manual adjustment features of C1 Series plus switch conversion to external control for automatic systems.

C70 --- 1.3 GPH (4.9 l/h) ... 300 psi (20.7 Bar)
C71 --- 2.5 GPH (9.5 l/h) ... 150 psi (10.3 Bar)
C72 --- 4.0 GPH (15.1 l/h) ... 100 psi (6.9 Bar)
C73 --- 8.0 GPH (30 l/h) ..... 60 psi (4.1 Bar)
C74 ---- 20 GPH (76 l/h) ..... 25 psi (1.7 Bar)
C77 ---- 10 GPH (38 l/h) ..... 80 psi (5.5 Bar)
C78 ---- 25 GPH (95 l/h) ..... 30 psi (2.07 Bar)
C90 --- 1.3 GPH (4.9 l/h) ... 300 psi (20.7 Bar)
C91 --- 2.5 GPH (9.5 l/h) ... 150 psi (10.3 Bar)
C92 --- 4.0 GPH (15.1 l/h) ... 100 psi (6.9 Bar)
C93 --- 8.0 GPH (30 l/h) ..... 60 psi (4.1 Bar)
C94 ---- 20 GPH (76 l/h) ..... 25 psi (1.7 Bar)

Voltage Code

1 -------- 120 VAC US Plug
2 -------- 240 VAC US Plug
3 -------- 220-240 VAC DIN Plug
5 -------- 240-250 VAC, UK Plug
6 -------- 240-250 VAC, AUST/NZ Plug
7 -------- 220-240 VAC, SWISS Plug

Liquid End

See next page for complete liquid end specifications and selection.

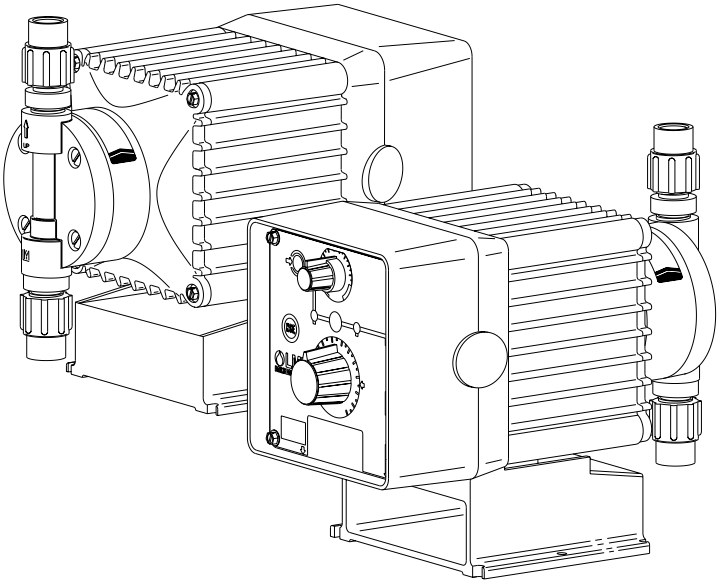

Dimensions

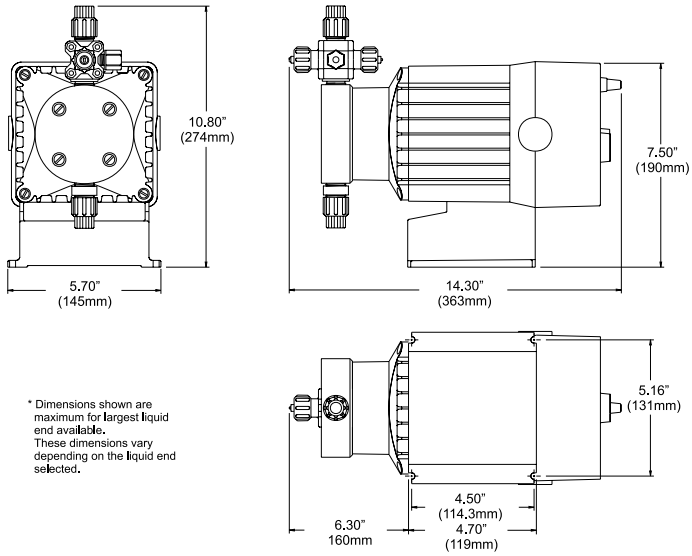

* Dimensions shown are maximum for largest liquid end available. These dimensions vary depending on the liquid end selected.

Specifications

Series	Strokes Per Minute (Adjustable) Min	Max	Stroke Length (Adjustable) Recommended Minimum	Average Input Power @ Max Speed	Shipping Weight
C10, C70, C90 C11, C71, C91 C12, C72, C92 C13, C73, C93 C14, C74, C94	1	100	10%	44 watts	20 lbs (9.1 kg)
C77 C78	1	100	10%	87 watts	28 lbs (12.7 kg)

LMI MILTON ROY

8 Post Office Square
Acton, MA 01720 USA
TEL: (978) 263-9800
FAX: (978) 264-9172
http://www.lmipumps.com

Replaces same of Rev.C 9/97
1712.D 10/99

Configuration Data & Materials of Construction

Drive Assembly	Liquid End No.	Size Code	Materials of Construction: Head & Fittings	Balls	Liquifram™	Seal Ring	Accessory	Tubing & Connections: Discharge	Suction
C90 ☐ -									
C70 ☐ -	297	0.9	316 S.S.	316 S.S.	Fluorofilm™	316 S.S.		Pipe 1/4" NPT M	
C10 ☐ -	94S**	0.9	PVC	Ceramic	Fluorofilm™	PTFE	4FV	Pipe 1/4" NPT M	
	360SI †	1.8	Acrylic/PGC	Ceramic	Fluorofilm™	PGC / Polyprel®	4FV	PE .375" O.D.	
	361SI †	1.8	PGC/PGC	Ceramic	Fluorofilm™	PGC / Polyprel®	4FV	PE .375" O.D.	
C91 ☐ -	362SI †	1.8	PVDF / PVDF	Ceramic	Fluorofilm™	PVDF/ Polyprel®	4FV	PE .375" O.D.	
C92 ☐ -	363SI †	1.8	PVDF / PVDF	Ceramic	Fluorofilm™	PVDF/ PTFE	4FV	PE .375" O.D.	
C71 ☐ -	277	1.8	316 S.S.	316 S.S.	Fluorofilm™	316 S.S.		Pipe 1/4" NPT M	
C72 ☐ -	71FS	1.8	Acrylic/PVDF	PTFE	Hypalon®	Hypalon®	4FV	PE .5" O.D.	Vinyl .5" O.D.
C11 ☐ -	71S †	1.8	Acrylic/PVC	Ceramic	Fluorofilm™	PTFE	4FV	PE .5" O.D.	Vinyl .5" O.D.
C12 ☐ -	72S †	1.8	PVC	Ceramic	Fluorofilm™	PTFE	4FV	PE .5" O.D.	
	74S**	1.8	PVC	Ceramic	Fluorofilm™	PTFE	4FV	Pipe 1/4" NPT M	
	75HV	1.8	Polypropylene	316 S.S.	Fluorofilm™	PTFE		PE .5" O.D.	Vinyl .938" O.D.
	75S †	1.8	Polypropylene	Ceramic	Fluorofilm™	PTFE	4FV	PE .5" O.D.	
	76	1.8	Acrylic/PP	316 S.S.	Fluorofilm™	Hypalon®		PE .5" O.D.	Vinyl .938" O.D.
	79	1.8	UHMW PE	Ceramic	Hypalon®	Hypalon®		PE .5" O.D.	Vinyl .5" O.D.
	310SI †	3.0	Acrylic/PGC	Ceramic	Fluorofilm™	PGC / Polyprel®	4FV	PE .375" O.D.	
	311SI †	3.0	PGC/PGC	Ceramic	Fluorofilm™	PGC / Polyprel®	4FV	PE .375" O.D.	
	312SI †	3.0	PVDF / PVDF	Ceramic	Fluorofilm™	PVDF/ Polyprel®	4FV	PE .375" O.D.	
C93 ☐ -	313SI †	3.0	PVDF / PVDF	Ceramic	Fluorofilm™	PVDF / PTFE	4FV	PE .375" O.D.	
C73 ☐ -	20HV	3.0	Acrylic/PP	316 S.S.	Fluorofilm™	Hypalon®		PE .5" O.D.	Vinyl .938" O.D.
C13 ☐ -	20S**	3.0	Acrylic/PVC	Ceramic	Fluorofilm™	Hypalon®	4FV	PE .5" O.D.	Vinyl .5" O.D.
	24	3.0	PVC	Ceramic	Fluorofilm™	PTFE		Pipe 1/2" NPT M	
	25HV	3.0	Polypropylene	316 S.S.	Fluorofilm™	PTFE		PE .5" O.D.	Vinyl .938" O.D.
	25P	3.0	Polypropylene	Ceramic	Fluorofilm™	PTFE		Pipe 1/2" NPT M	
	25T	3.0	Polypropylene	Ceramic	Fluorofilm™	PTFE		PE .5" O.D.	
	26S**	3.0	PVC	Ceramic	Fluorofilm™	Viton®	4FV	PE .5" O.D.	
	27	3.0	316 S.S.	316 S.S.	Fluorofilm™	PTFE		Pipe 1/2" NPT M	
	29	3.0	UHMW PE	Ceramic	Fluorofilm™	Hypalon®		PE .5" O.D.	
	30	6.0	Acrylic/PVC	Ceramic	Fluorofilm™	PTFE		PE .5" O.D	Vinyl .5" O.D.
C94 ☐ -	32	6.0	PVDF	Ceramic	Fluorofilm™	PTFE		PE .5" O.D.	
C78 ☐ -	34	6.0	PVC	Ceramic	Fluorofilm™	PTFE		Pipe 1/2" NPT M	
C74 ☐ -	35P	6.0	Polypropylene	Ceramic	Fluorofilm™	PTFE		Pipe 1/2" NPT M	
C14 ☐ -	35T	6.0	Polypropylene	Ceramic	Fluorofilm™	PTFE		PE .5" O.D.	
	36	6.0	PVC	Ceramic	Fluorofilm™	PTFE		PE .5" O.D.	
	37	6.0	316 S.S.	316 S.S.	Fluorofilm™	PTFE		Pipe 1/2" NPT M	
	20HV	3.0	Acrylic/PP	316 S.S.	Fluorofilm™	Hypalon®		PE .5" O.D.	Vinyl .938" O.D.
	20S**	3.0	Acrylic/PVC	Ceramic	Fluorofilm™	Hypalon®	4FV	PE .5" O.D.	Vinyl .5" O.D.
	24	3.0	PVC	Ceramic	Fluorofilm™	PTFE		Pipe 1/2" NPT M	
C77 ☐ -	25HV	3.0	Polypropylene	316 S.S.	Fluorofilm™	PTFE		PE .5" O.D.	Vinyl .938" O.D.
	25P	3.0	Polypropylene	Ceramic	Fluorofilm™	PTFE		Pipe 1/2" NPT M	
	25T	3.0	Polypropylene	Ceramic	Fluorofilm™	PTFE		PE .5" O.D.	
	26S**	3.0	PVC	Ceramic	Fluorofilm™	Viton®	4FV	PE .5" O.D.	
	27	3.0	316 S.S.	316 S.S.	Fluorofilm™	PTFE		Pipe 1/2" NPT M	
	29	3.0	UHMW PE	Ceramic	Fluorofilm™	Hypalon®		PE .5" O.D.	

☐ See front page for voltage code specifications.

** These Liquid Ends are available without a 4FV, simply drop the 'S' at the end of the Liquid End number to order the model without a 4FV.

† To specify ¼" NPT male, change 'I' to 'P'. To specify black, UV resistant tubing, change 'I' to 'U'. To specify Bleed 4FV, change 'S' to 'B'. To specify 3FV, change 'S' to'T'.

Fluorofilm™ is a copolymer of PTFE and PFA.

Polyprel® is an elastomeric PTFE copolymer.

4FV indicates that the pump is equipped with an LMI Four Function Valve. This diaphragm type anti-syphon/pressure relief valve is installed on the pump head. It provides anti-syphon protection and aids in priming, even under pressure.

Output Information

Series	Gallons per Hour Min	Max	Liters per Hour Min	Max	mL/cc per Minute Min	Max	mL/cc per Stroke Min	Max	Maximum Injection Pressure	
C10, C70*, C90*	0.001	1.3	0.005	4.9	0.08	82	0.08	0.82	300 psi	(20.7 Bar)
C11, C71*, C91*	0.003	2.5	0.010	9.5	0.16	158	0.16	1.58	150 psi	(10.3 Bar)
C12, C72*, C92*	0.004	4.0	0.015	15.1	0.25	252	0.25	2.52	100 psi	(6.9 Bar)
C13, C73*, C93*	0.008	8.0	0.030	30	0.51	505	0.51	5.05	60 psi	(4.1 Bar)
C14, C74*, C94*	0.020	20.0	0.076	76	1.26	1262	1.26	12.62	25 psi	(1.7 Bar)
C77*	0.010	10.0	0.038	38	0.63	631	0.63	6.31	80 psi	(5.5 Bar)
C78*	0.025	25.0	0.095	95	1.58	1577	1.58	15.77	30 psi	(2.07 Bar)

* Minimum output is based on 1 stroke per minute and 10% stroke setting, minimum output can be reduced further in external mode. Series C9 pumps may be programmed for strokes per hour for lower outputs.

Metering Pumps

LMI
MILTON ROY

Excellence through Versatility

Liquid Metronics Incorporated has been providing quality products and service to the water treatment industry worldwide for over 25 years.

Leading the way in the metering pump industry, LMI introduced the first full line of electronic metering pumps and accessories. The breadth of LMI's product line extends from low-cost metering pumps for domestic potable water treatment to highly sophisticated custom designs for specific customer applications.

Today, LMI continues to shape the future of the industry by offering the next generation of our trademark yellow and black metering pumps, the LiquiPro™ Series. This series of electronic metering pumps offers simple installation and maintenance with its unique cartridge valve design, as well as quick and easy "hands free" priming three, four function and auto prime valves.

Utilizing superior designs and industry experience, as well as a state-of-the-art facility and highly trained service representatives, LMI offers Water Treatment Professionals the quality and reliability they've come to expect.

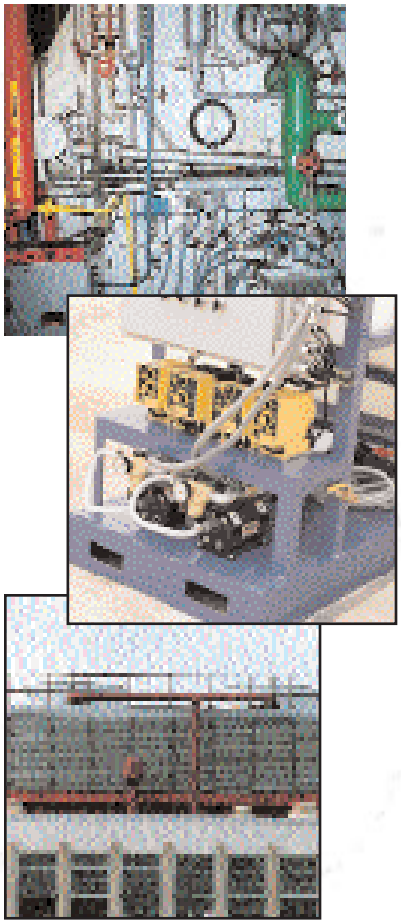

Waste Water Treatment

Cooling Water Treatment

Boiler Water Treatment

Municipal Water Treatment

Fertilizer Injection

Laboratory Fluid Metering

Fluoridation

Paper Chemical Feed

Domestic Potable Water

Swimming Pool

How A Metering Pump Works

LMI's solenoid-driven metering pumps are used for the precise injection of chemicals into a process or system. The mechanically actuated diaphragm design has only one moving part which is permanently lubricated. The simplicity and efficiency of this design results in a pump that consumes very little power, enabling the pump to be totally enclosed in a chemically resistant housing for installation in the harshest environments.

Durable Stroke Adjustment Mechanism

A rigid stroke bracket and large stroke knob offer precise, repeatable performance and simple adjustment over entire output range.

NEMA 4X/ IP65 Housings

Totally enclosed, chemically resistant polypropylene housing for the ultimate protection against corrosive environments.

EPU

LMI's Electromagnetic Power Unit (EPU) is designed for efficiency and consistent performance over a wide operating and temperature range.

Multi-Function Valves

The industry standard for over 25 years, features Fluorofilm™ diaphragms for long life and ramp style knobs for "hands free" priming with standard 3FV or optional 4FV. The auto prime valve option offers auto degassing for pumping chemicals prone to gassing.

Fluorofilm™ Liquiframs™

The unique manufacturing process of LMI diaphragms ensures outstanding chemical resistance and flexibility for long life.

Cartridge Valves

Unique cartridge valves have closely guided balls and triple sequential valve seats for optimum performance over entire pressure range.

Variety of Liquid Ends

A wide selection of liquid handling assemblies including PVDF, PVC, Acrylic, Polypropylene, 316 SS, and UHMWPE. Configurations for viscous chemicals and slurries provide flexibility in all applications.

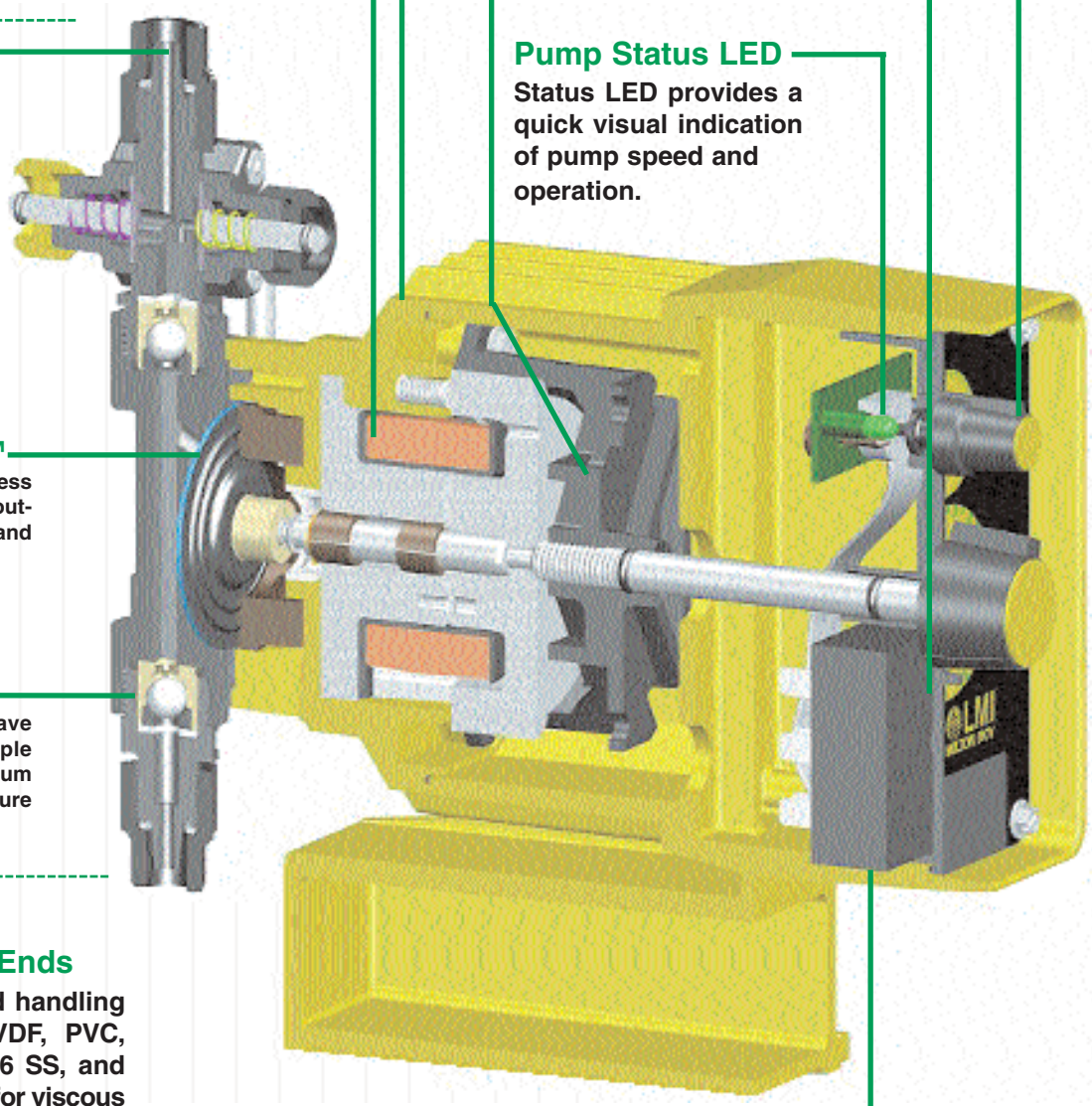

Accurate Speed Control

Provides precise stroke rate and a turndown ratio up to 1000:1 for unmatched versatility.

Fully Encapsulated Electronics

Completely enclosed electronics provide protection against moisture, corrosive atmospheres and damage from vibration or mechanical shock.

Pump Status LED

Status LED provides a quick visual indication of pump speed and operation.

Manual or External Control

Dual-manual control of speed and stroke length or external control by means of a 4-20 mA or pulse input for flow proportional applications and system integration.

Electronic Metering Pumps

LMI's family of electronic metering pumps offer:

- Adjustable stroke frequency and the flexibility of up to 1000:1 turndown ratio
- Manually adjustable stroke length provides accurate pump output adjustment
- NEMA 4X / IP65 enclosures for protection against corrosive environments
- Time tested electronics for reliable, repeatable performance
- Totally encapsulated electronics for protection against moisture and corrosive conditions
- Priming valves with Flourofilm™ diaphragms and ramp style knobs for "hands free" priming

Series AA

Key Features / Benefits

- Rigid stroke bracket assembly for highly accurate/consistent dosing performance
- Advanced control options for simplified system integration (pulse multiply/divide, 4-20 mA, remote on/off)
- 5-level power control option to reduce system shock and extend the life of the pump
- External pacing for flow proportional applications

	Max Output		Max Pressure	
Model	GPH	l/h	PSI	Bar
AAX4	0.58	2.2	250	17.3
AAX5	1.0	3.8	110	7.6
AAX6	2.0	7.6	50	3.5
AAX7	0.42	1.6	140	9.7
AAX8	0.75	2.8	80	5.5

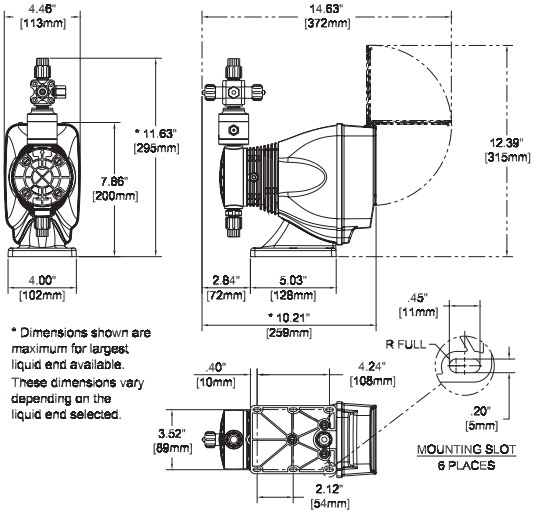

Series B / Series C

Series B				
	Max Output		Max Pressure	
Model	GPH	l/h	PSI	Bar
BX1	1.6	6.1	150	10.3
BX2	2.5	9.5	100	6.9
BX3	4.5	17.0	50	3.5
BX4	7.0	26.5	30	2.07

Series C				
	Max Output		Max Pressure	
Model	GPH	l/h	PSI	Bar
CX0	1.3	4.9	300	20.7
CX1	2.5	9.5	150	10.3
CX2	4.0	15.1	100	6.9
CX3	8.0	30.3	60	4.1
CX4	20.0	75.7	25	1.7
C76	4.0	15.1	175	12.1
C77	10.0	38.0	80	5.5
C78	25.0	95.0	30	2.07

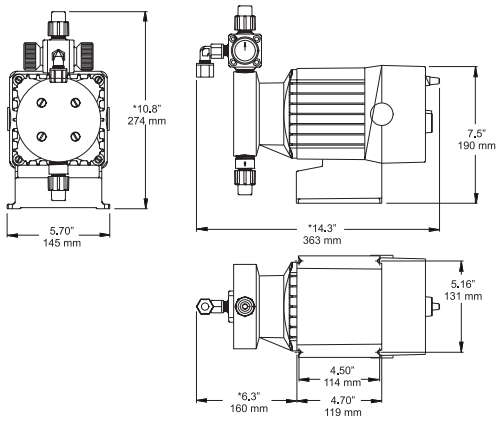

Series P

Key Features/Benefits

- High quality construction for durability
- Compact size; ideal for OEM applications
- Fixed speed versions for simple, low cost applications

	Max Output		Max Pressure	
Model	GPH	l/h	PSI	Bar
PX2	0.21	0.79	150	10.3
PX3	0.42	1.6	110	7.6
PX4	0.58	2.2	250	17.3
PX5	1.0	3.8	110	7.6
PX6	2.0	7.6	50	3.5

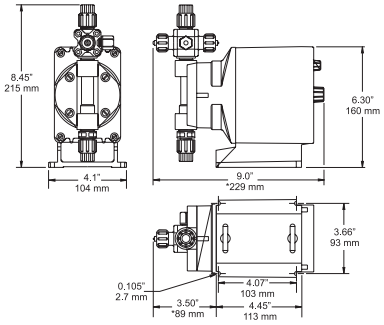

Specialized Electronic Metering Pumps

Series E7
Explosion Proof

Key Features/Benefits

- Rugged, urethane coated cast housing for applications in hazardous environments
- Manual control or external control without the need for costly motor and control options
- Designed to meet or exceed all standards for Class I, Division I, Groups C and D; Class II, Division I, Groups E, F, and G

	Max Output		Max Pressure	
Model	GPH	l/h	PSI	Bar
E70	1.3	4.9	300	20.7
E71	2.5	9.5	150	10.3
E72	4.0	15.1	100	6.9
E73	8.0	30.3	60	4.1
E74	20.0	76.0	25	1.7

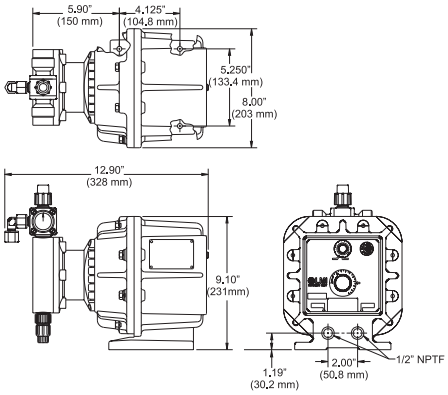

Series H9
High Pressure

Key Features/Benefits

- Unique liquid handling assembly for low output injection into high pressure systems
- Advanced control options for system integration (pulse multiply/divide, 4-20 mA, remote on/off)
- 5-level power control option to reduce system shock and extend the life of the pump

	Max Output		Max Pressure	
Model	GPH	l/h	PSI	Bar
H91	0.14	0.50	300	21
H92	0.10	0.38	600	42
H93	0.07	0.25	1000	70

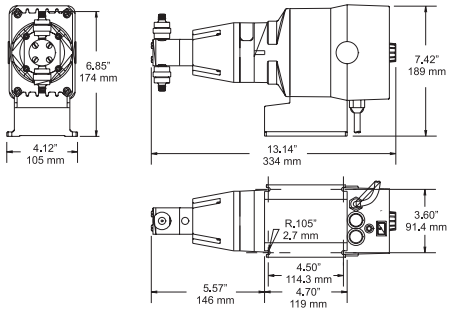

Series J5
12 VDC

Key Features/Benefits

- 12VDC power for remote applications where AC electrical power is unavailable
- Low power consumption (1.6 amp average current draw or 19 watts at maximum speed)
- Manual or external control for flow proportional applications

	Max Output		Max Pressure	
Model	GPH	l/h	PSI	Bar
J54D	0.42	1.6	140	9.7
J55D	1.0	3.8	60	4.1
J56D	2.0	7.6	20	1.4

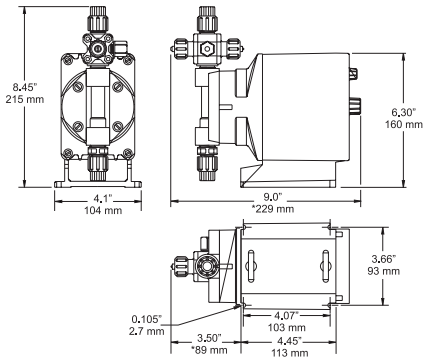

Motor Driven Metering Pumps

Series G

Model SD & Model SG

Features / Benefits:

- Mechanically actuated diaphragm (MAD)
- Variable eccentric design delivers smooth output
- Variable speed drives for external control (4-20mA)
- Durable metallic housing designed to withstand tough environments
- Liquid end materials: PVC, Polypropylene, PVDF and 316 S.S.

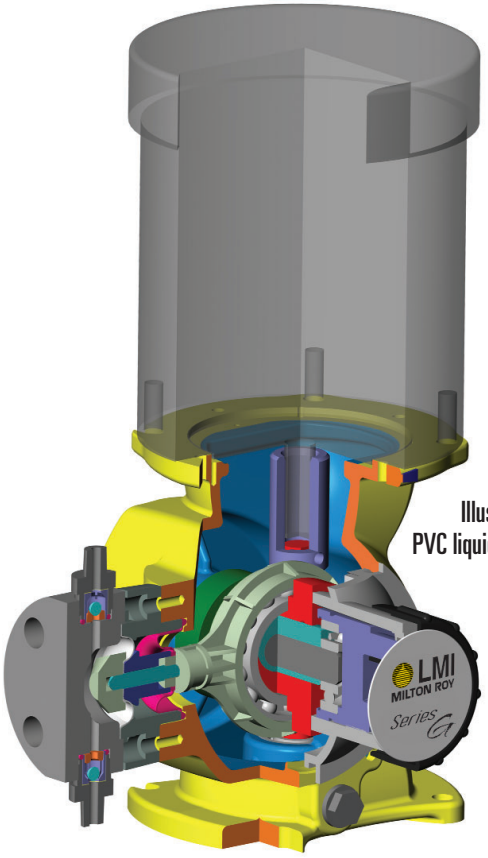

Illustrated to the left is a SD4 with a PVC liquid end, featuring NPT connections.

Model SD				
	Max Output Range		Max Pressure	
	GPH	l/h	PSI	Bar
SD2	0.18 - 0.7	0.7-2.6	175	12
SD4	3 -12	11.4 - 45	150	10
SD7	12.5 - 50	47-189	100	7
SD8	28 -115	106 - 435	75	5
Model SG				
SG5	26 - 106	98 - 400	150	10
SG6	36 - 147	136 - 556	100	7
SG7	75 - 300	284 - 1136	50	3.5

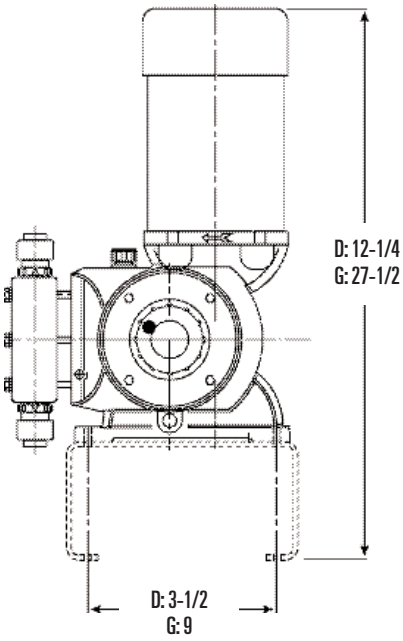

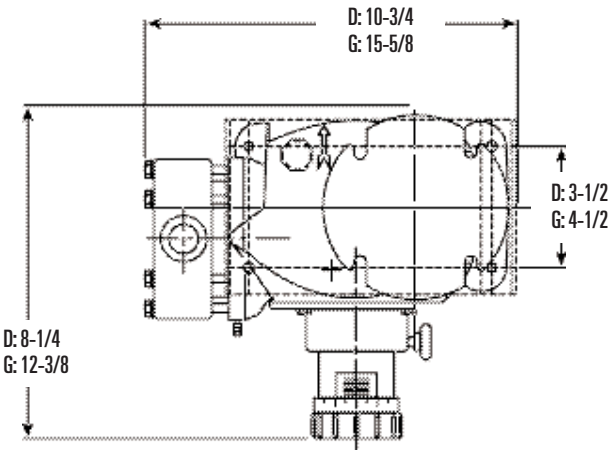

Liquid Handling Assemblies

LMI offers a wide selection of liquid handling assemblies with flexible tubing and pipe thread connections. Configurations for viscous chemicals and slurries provide total flexibility in all applications

- PVC
- Acrylic
- Polypropylene
- PVDF
- UHMWPE
- 316 SS

Repair & Preventative Maintenance Kits

RPM Pro Pac™ kits include the recommended replacement parts for the LiquiPro™ Series Metering Pumps. These kits provide an easy, economical solution to annual pump maintenance.

Accessories

LMI offers a complete line of accessories to customize and complete your installation.

- Auto prime valve 4FV/3FV/Bleed 4FV
- Agitators
- Back Pressure Valves
- Calibration Cylinders
- Conduit Connection Kit
- Corp Stop & Nozzle Assemblies
- Digi-Pulse™ Flow Monitors
- Extension Cable Assemblies
- Flow Indicator
- Fluoride Saturator
- Flowmeter
- Remote Programmable Flowmeter
- Liquid & Low Level Switches
- Micropace™ Control Modules
- Pressure Relief Valves
- Primer Flush Kit
- Pulse Transmitter
- Pump Mounting Accessories
- Remote Auto Flush Controllers
- Seal Ring Kit
- Splash Guard
- Suction Tubing Accessories
- Syphon Breaker
- Tanks
- Tubing Connector Assemblies

Liquid Metronics Incorporated
201 Ivyland Road
Ivyland, PA 18974 USA
Tel: (215) 293-0401
Fax: (800) 327-7563
www.lmipumps.com

Replaces same of Rev. C 12/99
1883. D 08/03

VIBROPAC
TECNOLOGIA EM TRANSPORTE DE FLUIDOS

LMI-MILTON ROY

MANUAL DE INSTRUÇÕES

BOMBAS DOSADORAS

FONE (5511) 6914 8255 FACSIMILE (5511) 6163 6888
RUA OLIVEIRA MELO 686 - IPIRANGA - CEP 04271-000 - SÃO PAULO - SP

VIBROPAC
TECNOLOGIA EM TRANSPORTE DE FLUIDOS

INSTRUÇÕES DE MANUSEIO E INSTALAÇÃO
BOMBAS DOSADORAS

1.0 INTRODUÇÃO

A LMI é o mais versátil fabricante mundial de bombas dosadoras.
Esse manual é destinado a apresentar procedimentos de instalação, manutenção e correção de Problemas para bombas controladas manual ou automaticamente.
Esse manual cobre as bombas de série A, B, C, E, J e P.
Caso sua bomba não pertença a uma destas séries consulte-nos para obter o manual especifico

A bomba dosadora eletromagnética consiste basicamente de duas partes :
1- O acionamento eletromagnético.
2- A cabeça de bombeamento.

P153-398TI

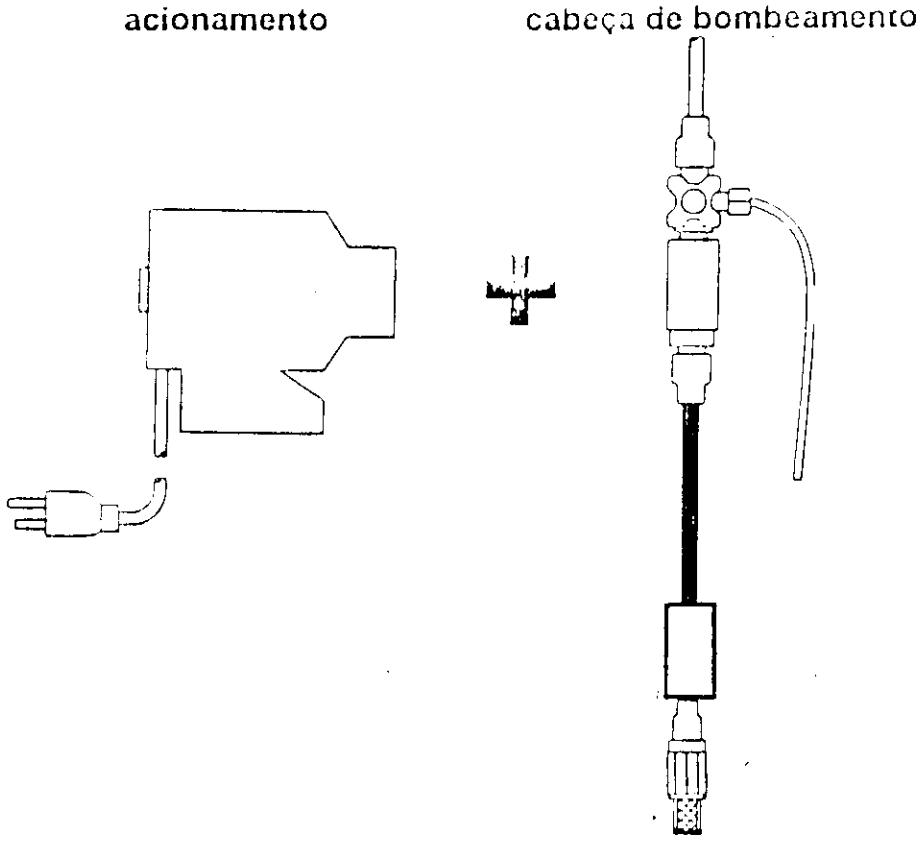

FONE (5511) 6914 8255 FACSIMILE (5511) 6163 6888
RUA OLIVEIRA MELO 686 - IPIRANGA - CEP 04271-000 - SÃO PAULO - SP

2. EMBALAGEM

Acompanham todas as bombas eletromagnéticas os seguintes acessórios :

01-Válvula 3FV;
01-Válvula de pé;
01-Válvula de injeção;
03-Metros de mangueira flexível de diâmetro compatível com a bomba especificada (para sucção e descarga).
01-Peso de cerâmica.

Veja abaixo os componentes básicos da bomba dosadora eletromagnética LMI :

Injection Check Valve

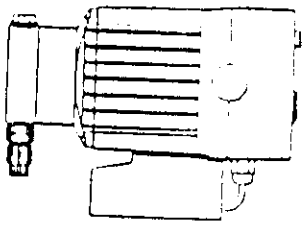

Metering Pump

Foot Valve

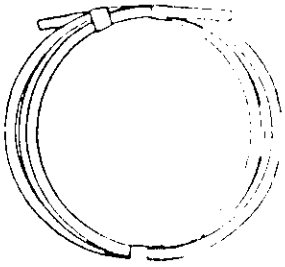

Tubing

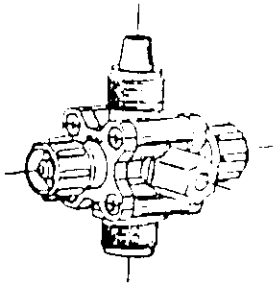

FOUR FUNCTION Valve (4-FV) and Tubing

Suction Tubing Straightener

FONE (5511) 6914 8255 FACSIMILE (5511) 6163 6888
RUA OLIVEIRA MELO 686 - IPIRANGA - CEP 04271-000 - SÃO PAULO - SP

3.0 CUIDADOS ANTES DA INSTALAÇÃO

As seguintes precauções devem ser tomadas antes da instalação de bombas dosadoras LMI. Leia os itens abaixo cuidadosamente antes de iniciar a instalação.

3.1 PRECAUÇÕES

A) Proteção Individual

Sempre utilize EPI's (roupa protetora, proteção ocular e luvas) quando trabalhando ou próximo de uma bomba dosadora. Precauções complementares devem ser tomadas dependendo do produto bombeado.

B) Escorva

Todas as bombas dosadoras LMI são pré-escorvadas com água quando embarcadas da fábrica. Se a sua solução não é compatível com água, desmonte a cabeça da bomba, seque as peças complementares (cabeçote, válvulas, cartuchos e diafragma. Monte a cabeça lembrando de parafusar em cruz. Preencha a cabeça da bomba com o fluido a ser bombeado, este procedimento ajudará na escorva da bomba.

C) Compatibilidade da Solução

A lista explodida da cabeça da bomba apresenta todos os materiais de construção incluídos na parte em contato com a solução bombeada. Se alguma duvida persistir sobre a escolha do material, contate-nos e analisaremos a compatibilidade dos materiais aplicados.

D) Conexões de Tubulação

As mangueiras ou tubos de sucção e descarga não devem ser reduzidos. Tenha certeza que todos os tubos estão seguramente fixados as conexões antes de partir a bomba.
Sempre use as mangueiras fornecidas pela LMI ou de igual qualidade, pois estes são especialmentes desenhados para a máxima compatibilidade com a bomba. Recomendamos que os tubos sejam protegidos para evitar danos no caso de ruptura acidental das mangueiras.

E) Conexões e roscas Usinadas

Todas as conexões devem ser realizadas com a mão até um máximo de 1/8 a 1/4 de volta após contato com o anel de selagem. Não use torque em demasia, o aperto excessivo ou com uso de chaves de boca ou alicates podem danificar as conexões, anel de selagem ou até a cabeça da bomba, causando perda da escorva ou até o não funcionamento da bomba.
Não Use fita teflon ou outro tipo de veda rosca nas roscas das válvulas. Fita teflon só deve ser usada na conexão de ¼ ou ½ NPT das válvulas de injeção antes da instalação em tubulação ou TEE.

F) Conexões Elétricas

CUIDADO : Para reduzir o risco de choque elétrico, a bomba dosadora deve ser ligada em terminal aterrado de voltagem compatível com a apresentada no painel de controle da bomba A bomba deverá estar conectada a um bom terra. Não use adaptadores.

4.0 INSTALAÇÃO

4.1 Localização e Instalação.

Instale a bomba em local conveniente ao tanque de solução e suprimento elétrico.
A bomba deve estar acessível para manutenção de rotina, e não deve estar sujeita a temperaturas ambientes acima de 50 Celsius. Se a bomba estiver exposta a luz solar direta, tubos ou mangueiras resistentes a raios UV (ultra violeta) devem ser utilizados.

4.2 Montagem da Bomba

A bomba poderá ser montada de duas formas :
1-Sucção afogada (instalação ideal)
2-Sucção a seco – Para instalações de sucção a seco é recomendado até 1,5mts de comprimento e densidade próxima a da água. Para soluções mais densas consulte-nos.
Sua bomba LMI deve ser montada de forma a manter a sucção e descarga na vertical.
NUNCA posicione a bomba e conexões horizontalmente.

4.2.1 Sucção Afogada

A bomba deve ser montada em base de preferencia no próprio tanque de sucção. Este tipo de instalação é a de melhor resultado e recomendada para vazões bem baixas, soluções voláteis e soluções de alta viscosidade. Como a tubulação de sucção estará cheia de produto, a escorva se realiza rapidamente a chance de perder a escorva é reduzida.

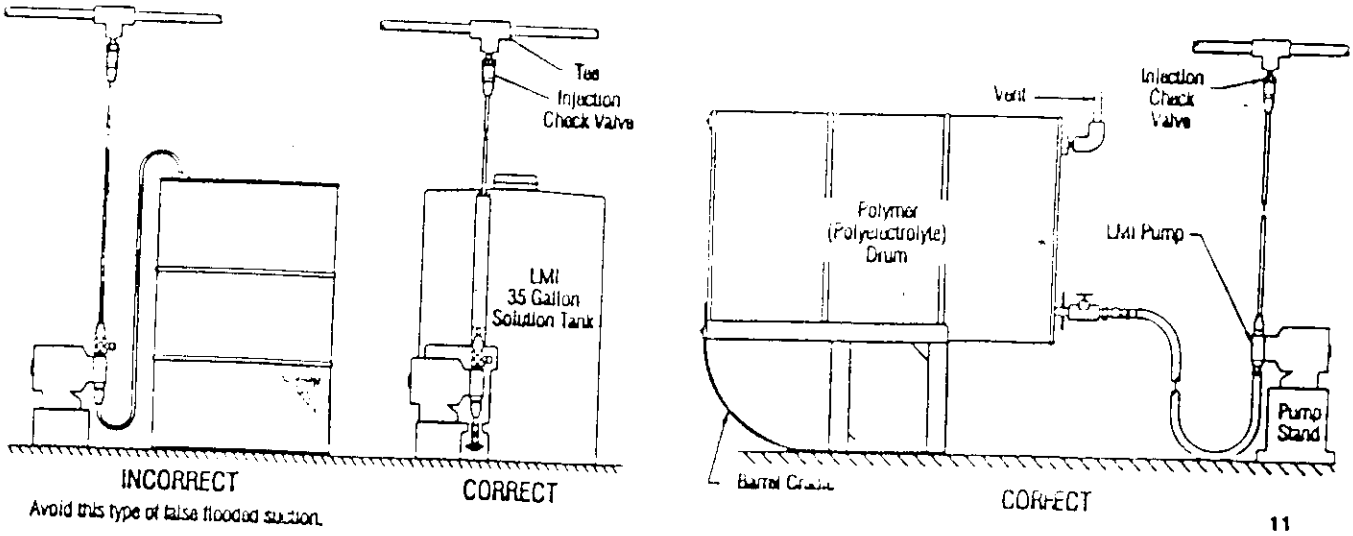

FONE (5511) 6914 8255 FACSIMILE (5511) 6163 6888
RUA OLIVEIRA MELO 686 - IPIRANGA - CEP 04271-000 - SÃO PAULO - SP

4.2.2.1 Sucção a Seco – Montagem em Suporte de Parede

A bomba pode ser montada usando o suporte de parede LMI código 34643 diretamente sobre o tanque de solução. A bomba montada desta forma permite a troca rápida do tanque de solução.

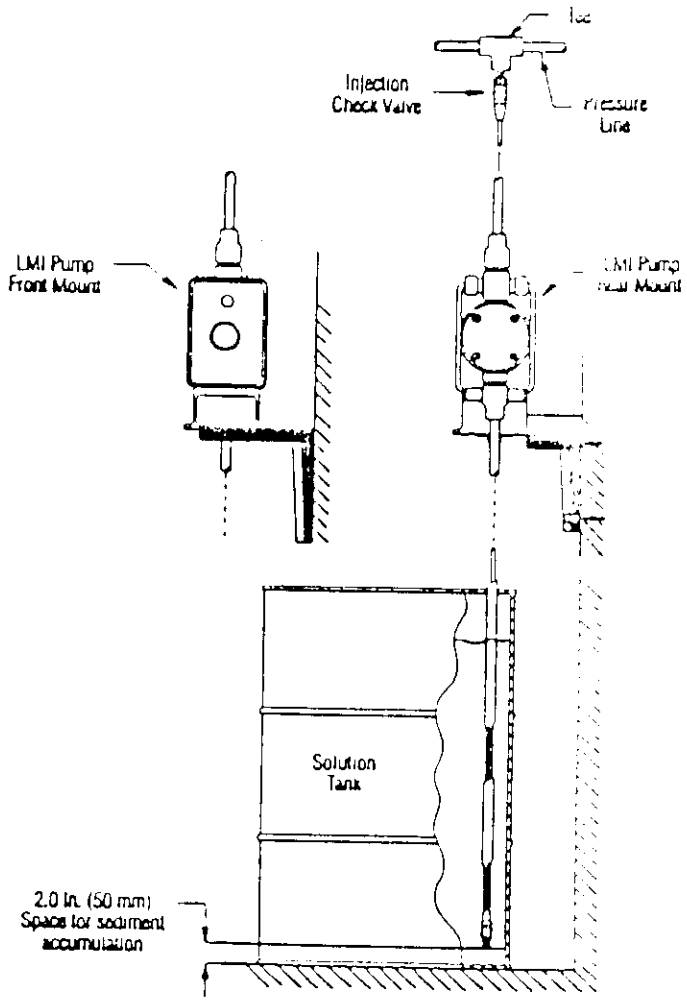

4.2.2.2 Sucção a Seco – Montagem no Topo do Tanque

A bomba poderá ser montada em um tanque moldado onde existe um recesso para manter a bomba estacionada. Os tanques LMI de 10 galões (código 27421) e de 50 galões (código 26350) possuem o recesso moldado para montagem da bomba.

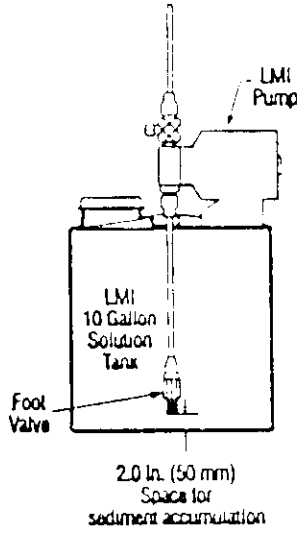

4.2.2.3 Sucção a Seco – Montagem Customizada

A bomba poderá ser montada em uma base construída pelo usuário desde que se mantenha o comprimento máximo de sucção de 1,5 mts. O kit de montagem LMI código 10461 poderá ser utilizado para manter a bomba nesta base.

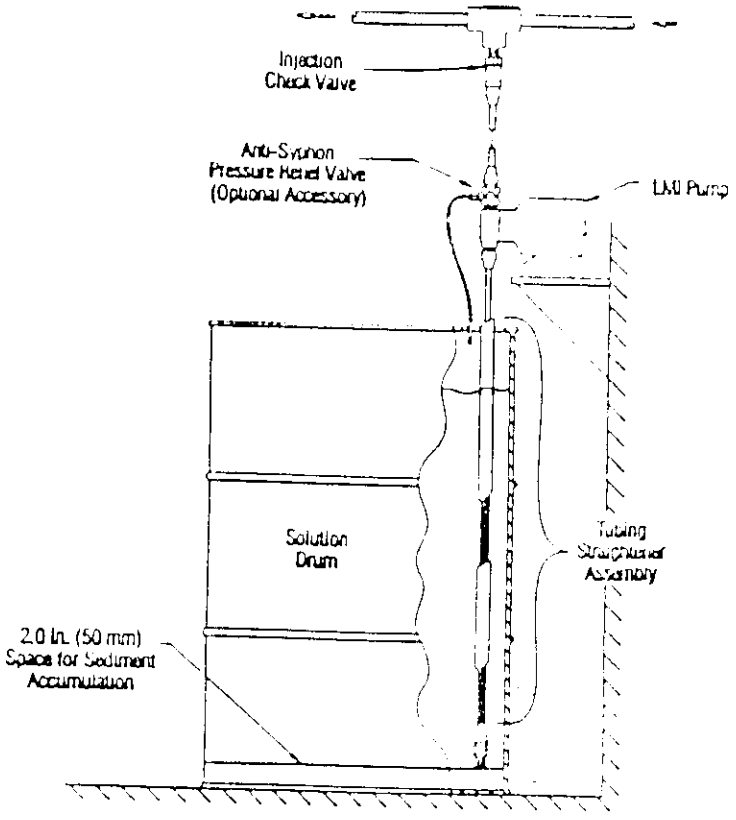

4.3 Conexões pôr Mangueira.

1) Utilize somente mangueira fornecidas pela LMI ou de similar qualidade.
2) Não use mangueira de vinil para a descarga da bomba. A pressão criada pela bomba poderá romper a mangueira de vinil.
3) Antes da instalação os tubos devem ser cortados com as extremidades em angulo reto.
4) As válvulas e conexões são fornecidas tampadas da fabrica para reter a pré-escorva. Remova estas tampas e plugs antes de conectar as mangueiras.

NÃO USE ALICATES OU CHAVES DE BOCA PARA REALIZAR OS APERTOS DAS CONEXÕES OU PORCAS.

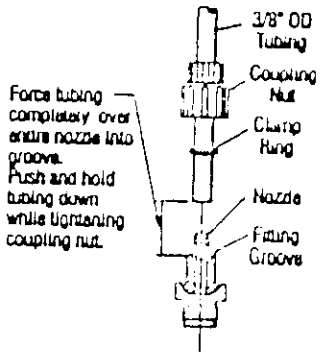

4.4 Válvulas Multi-Funções

As bombas dosadoras LMI são equipadas com uma válvula 3FV padrão. Caso seja necessário podem ser fornecidas com uma válvula 4FV de acordo com a aplicação, esta válvula é utiliza-pa onde temos problemas de sifonamento (bomba afogada dosando em nível inferior ou na sucção da bomba centrifuga.

As funções da válvula 3FV são :

1-Alivio de pressão
Se a linha de descarga estiver super pressurizada, a válvula abre automaticamente drenando a solução de volta para o tanque.
2-Despressurização da linha de descarga
Girando ¼ de volta o botão da válvula, a linha de descarga será drenada para o tanque.
3-Escorva
Girando ¼ de volta o botão da válvula, ajuda a escorva da bomba jogando o ar existente na mangueira e cabeçote na atmosfera.

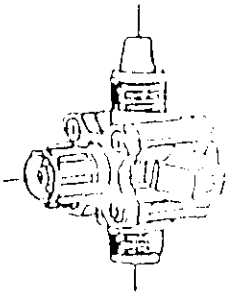

FOUR FUNCTION Valve
(4FV) and Tubing

As funções da válvula 4FV são :

1-Alivio de pressão
Se a linha de descarga estiver super pressurizada, a válvula abre automaticamente drenando a solução de volta para o tanque.
2-Despressurização da linha de descarga
Girando ¼ de volta o botão de alivio da válvula, a linha de descarga será drenada para o tanque.
3-Anti-sifão
Previne o sifonamento automaticamente quando a bomba estiver afogada ou descarregando sob vácuo.
4-Contra pressão
Fornece aproximadamente 25 psi de perda de carga para evitar dosagem errônea quando o sistema não fornece pressão suficiente.

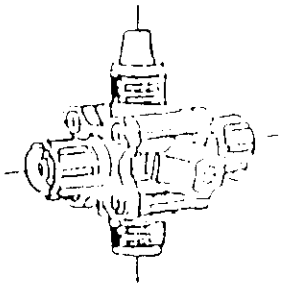

FOUR FUNCTION Valve
(4-FV) and Tubing

4.5 Instalação das válvulas multi-funções

Para instalar a válvula 3FV ou 4FV remova o caps no topo da cabeça da bomba e rosqueie a válvula até que a mesma encoste no anel de selagem. Um adicional de 1/8 – 1/4 de volta é necessário para se evitar vazamento. Não rosqueie demais, excesso de torque causará deformação ou quebra do anel de selagem impedindo perfeita vedação ou até danificar o cabeçote.
A mangueira de ¼" deverá ser conectada na sadia lateral da válvula, servindo como retorno para o tanque de solução. Esta mangueira não poderá ficar submersa na solução.
CUIDADO : A linha de retorno deve ser fixada para garantir o retorno da solução bombeada para dentro do tanque.

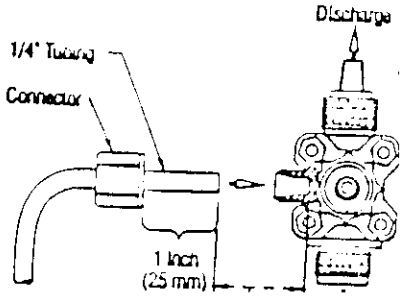

4.6 Instalação da válvula de pé e peso de cerâmica

A válvula de pé atua como uma válvula de retenção que manterá a bomba escorvada em Aplicações que requerem sucção a seco.
A válvula é desenhada para ficar submersa no tanque ou tambor de solução e deve permanecer na posição vertical, aproximadamente a 5 cm do fundo do tanque para se evitar entupimento do crivo pôr sedimentos ou impurezas na solução.
O peso de cerâmica assegura o posicionamento vertical da válvula de pé e da linha de sucção.
1.Monte a válvula de pé numa das extremidades da mangueira de sucção.
2.Encaixe o peso de cerâmica na mangueira de sucção.
3.Mergulhe o conjunto de sucção no tanque de solução e monte a outra extremidade da mangueira na válvula de sucção da cabeça da bomba.

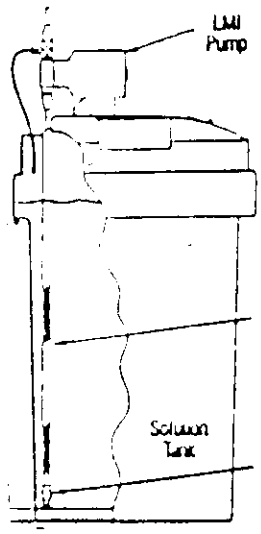

4.7 Instalação da válvula de injeção.

A válvula de injeção impede o fluxo de retorno de uma linha pressurizada. Monte a válvula de injeção em seu ponto de descarga. Qualquer tamanho de conexão NPTF ou TEE com uma bucha de redução para ¼" ou ½" NPTF irá permitir a instalação da válvula de injeção.
Use fita de teflon somente neste ponto para vedar a rosca do tubo.
Quando instalar a válvula de injeção, posicione-a de forma que a entrada esteja na parte inferior do tubo em uma posição vertical, variações para a esquerda ou direita de até 80 graus São aceitáveis.
Depois de cortada a mangueira num comprimento apropriado, conecte-a na válvula de injeção e depois na válvula de descarga da cabeça da bomba, assegurando-se de que a mangueira Não está estrangulada e nem em contato com superfícies quentes ou pontiagudas.

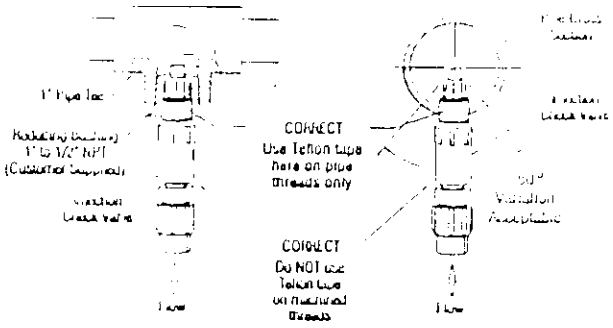

5.0 METHODS OF EXTERNALLY TRIGGERING OR PACING A7, B7, C7 AND D7 PUMPS

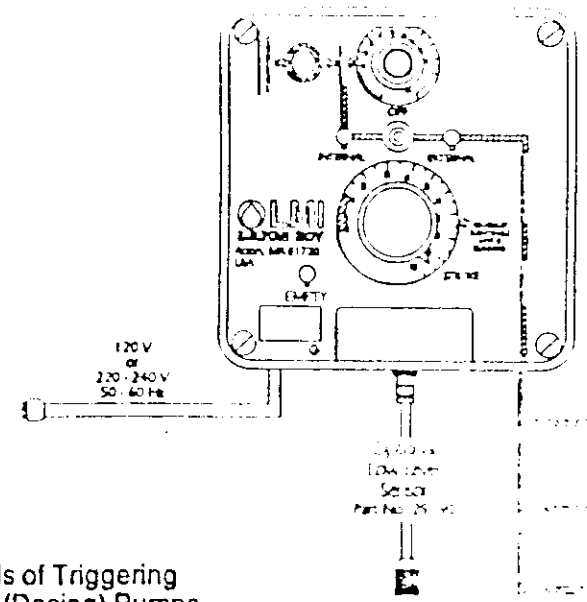

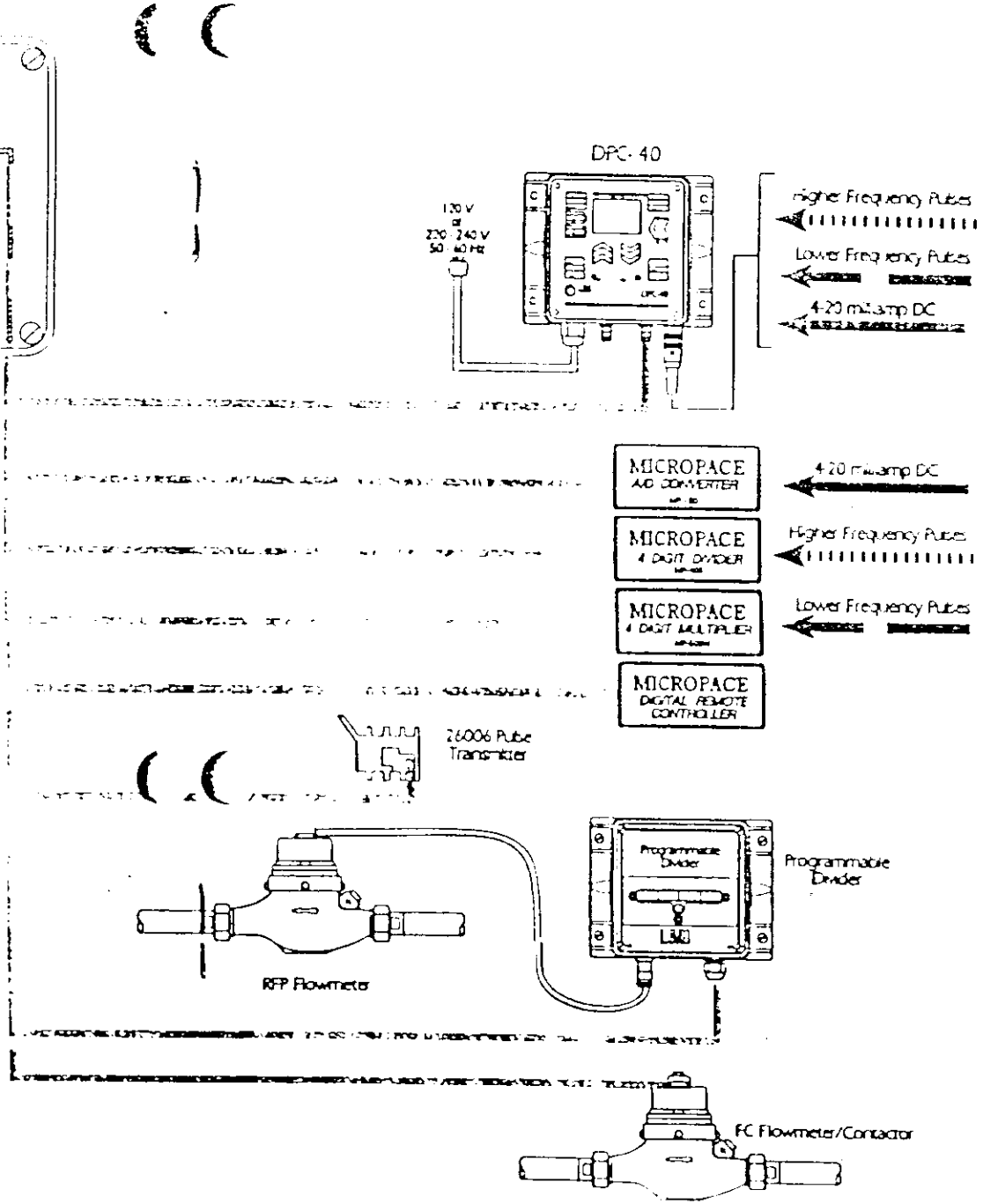

Methods of Triggering Metering (Dosing) Pumps

1. Switch Closure
   Switch closing triggers pump

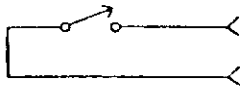

2. NPN Transistor
   Base goes high to trigger pump

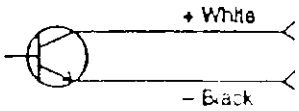

3. PNP Transistor
   Base goes low to trigger pump

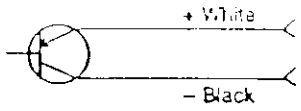

4. Opto Isolator

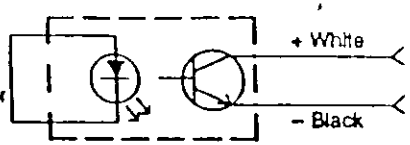

Note:
Switch or transistors must be capable of switching 15V DC at 2 milliamperes. Minimum time in low impedance state (on) is 50 milliseconds. Minimum time in high impedance state (off) is 100 milliseconds.

VIBROPAC COM. DE EQUIP. INDL. LTDA
FONE (5511) 6914 8255 FACSIMILE (5511) 63 6888
RUA GAL EUGÊNIO DE MELO, 85 - VILA MONUMENTO - CEP 01553-010 - SÃO PAULO - SP

6.0 PARTIDA E AJUSTES

1-Normalmente a bomba se escorvara automaticamente se a coluna de sucção for menor ou igual a 1.5 mts ou então siga as instruções abaixo.
2-Para auxiliar a escorva as bombas são enviadas de fabrica com água no cabeçote.

6.1 Controle e ajuste de vazão

NOTA : As bombas com controle manual de vazão não são equipadas com ajuste de pressão.

A maioria das bombas LMI possuem dois botões para ajuste de vazão. O botão superior do painel de controle altera a freqüência de pulsos (speed) o botão inferior controla o curso de deslocamento do diafragma (stroke).

6.1.1 Ajuste da freqüência de pulsos (speed).

Girando-se o botão de controle de speed no painel no sentido horário aumenta-se proporcionalmente o numero de pulsos da bomba.

NOTA : Somente para as bombas série "A7" quando formos operar com a bomba no modo externo (controle automático) deveremos girar totalmente o botão do speed no sentido horario. Um "click" indicara que a bomba está no modo externo.

6.1.2 Ajuste de curso (stroke).

O ajuste de curso se dará girando-se o botão do stroke no sentido horário. Aumentando proporcionalmente o deslocamento do diafragma e consequentemente a vazão.
CUIDADO : Não acione o botão de stroke com a bomba desligada, este procedimento poderá causar danos ao sistema de regulagem.

6.2 Partida e escorva para bombas com válvulas multi-funções

NOTA : Leia com atenção esta seção antes de proceder a partida da bomba.

Após todos os cuidados anteriores terem sido tomados, a bomba está montada e as mangueiras estão seguramente conectadas as válvulas, então podemos iniciar a escorva da bomba.
1-Conecte a bomba ao plug da tomada ou ligue o interruptor da bomba.
2-Com a bomba operando ajuste o botão do speed a 80% e o stroke a 100%.
NOTA : Se a bomba for equipada com botão de controle de pressão gire-o totalmente no sentido horário.
3-Girando ¼ de volta o botão da válvula multi-funções abre-se o alivio da bomba.
4-A mangueira de sucção deverá começar a encher-se com a solução do tanque.
5-Uma pequena quantidade de solução será descarregada pela linha de retorno da válvula multi-funções, gire o botão novamente ¼ de volta e desligue a bomba.

6-A bomba agora esta escorvada e pronta para operação.
7-Proceda o ajuste de vazão conforme item 6.4.
NOTA : Se a bomba não se escorvar sozinha remova a válvula multi-funções do cabeçote da bomba. Remova o cartucho e preencha com água ou solução a ser dosada o cabeçote pelo orifício de descarga. Recoloque a válvula e reinicie o procedimento.

6.3 Partida e escorva sem a válvula milti-funções.

NOTA : Leia com atenção esta seção antes de proceder a partir a bomba.

1-Conecte o plug na tomada ou ligue o interruptor da bomba.
2-Com a bomba operando, posicione o botão do speed a 80% e o stroke a 100%.
NOTA : Se a bomba for equipada com botão de controle de pressão gire-o totalmente no sentido horário.
3-A mangueira de sucção deverá encher-se com a solução do tanque.
4-Quando a solução começar a sair através da mangueira de descarga desligue a bomba.
5-A bomba agora esta escorvada e pronta para operação.
6-Proceda o ajuste de vazão conforme item 6.4.
NOTA : Se a bomba não escorvar sozinha remova a válvula de descarga do cabeçote. Remova o cartucho e preencha com água ou solução a ser dosada o cabeçote pelo orifício de descarga. Recoloque a válvula e reinicie o procedimento.

6.4 Ajuste de vazão

Uma vez a bomba escorvada, um ajuste de vazão apropriado deve ser feito.
A vazão da bomba deve ser calculada e ajustes feitos conforme abaixo:

6.4.1 Vazão de operação da bomba

Calcule a vazão de operação da bomba como segue :

Exemplo : Bomba modelo P-153-391TI, vazão máxima 3,8 l/h.

Vazão de operação da bomba = vazão máxima da bomba x % speed x % stroke.

Se a bomba for setada a 60% no speed e 70% no stroke, a vazão aproximada da bomba será:

Vazão de operação da bomba = 3,8 l/h x 0,6 x 0,7 = 1,59 l/h.

NOTA : Se a bomba não for equipada com controle de velocidade, calcule pela formula :
Vazão máxima da bomba x % stroke.

7.0 CALIBRAÇÃO

Uma vez completada a instalação e determinado o ajuste de vazão aproximado, a bomba deve ser calibrada para ajustar o speed e stroke para a vazão real desejada.

1-Se a bomba for equipada com controle de pressão, esteja certo que este esteja regulado no sentido horário.
2-Tenha certeza que a bomba esta escorvada, e a tubulação de descarga e válvula de injeção instalada no ponto de injeção.
3-Coloque a válvula de pé dentro de um recipiente graduado de no mínimo 1000 ml.
4-Ligue a bomba, e a deixe operar até que todo ar seja eliminado da linha de sucção e cabeçote.
5-Desligue a bomba, preencha novamente o recipiente graduado até uma marcação determinada.
6-Usando um cronometro, ligue a bomba pôr um periodo pré determinado de tempo (no mínimo o equivalente a 50 pulsos). Quanto maior o período de tempo mais confiável o resultado. Tenha certeza de contar o numero de pulsos durante o processo de calibração.
7-Desligue a bomba. Anote o tempo decorrido em relação ao volume total deslocado no recipiente graduado. Calcule a vazão na unidade de tempo escolhida (minutos, horas, dias).
8-Se a vazão estiver diferente do necessários, ajuste speed e stroke, estimando a correção
necessária e repita os passos de 1 a 7.

7.1 Controle de pressão.

Enquanto a bomba estiver operando, gire o botão de controle de pressão devagar no sentido anti horário até que a bomba comece a estolar. Deste ponto, agora gire o botão de controle de pressão no sentido horário de 1 a 1.1/2 marca de graduação até a bomba começar a dosar Este é o ponto ideal de ajuste de pressão para sua aplicação.
NOTAS :
1-Aumente a regulagem se a contra pressão na linha de descarga aumentar.
2-O ajuste de controle de pressão reduz choque, pulsações e aquecimento e prolonga a vida útil da bomba.

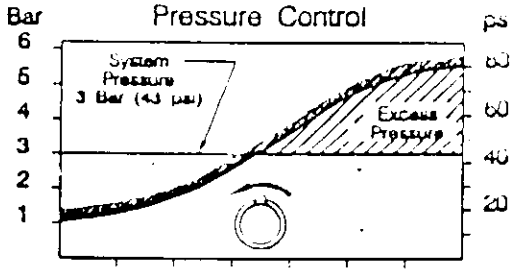

Adjust pressure control to reduce heat, shock, pulsations and prolong pump life.

FONE (5511) 6914 8255 FACSIMILE (5511) 6163 6888
RUA OLIVEIRA MELO 686 - IPIRANGA - CEP 04271-000 - SÃO PAULO - SP

7.2 Calibração no campo-Calibração volumétrica no modo automático.

1-Quando a vazão da bomba é comandada pôr um equipamento externo como um medidor de vazão, CLP ou sinal de 4-20 mA de qualquer outro equipamento, a vazão poderá ser calibrada somente pelo stroke.
2-Com a bomba escorvada e a mangueira de descarga e válvula de injeção instalada, coloque a válvula de pé em um recipiente graduado de no mínimo 1000 ml.
3-Coloque a bomba no modo interno (no painel de controle) com o botão de speed ajustado a 100% até que todo ar seja eliminado da linha de sucção e do cabeçote da bomba.
4-Ajuste o controle de pressão conforme item 7.1.
5-Desligue a bomba e note o nível da solução no recipiente graduado, preencha-o até um ponto determinado.
6-Ligue a bomba e conte o numero de pulsos pôr exatos um minuto, desligue a bomba.
7-Anote o volume bombeado durante um minuto, divida pelo numero de pulsos para determinar o volume de solução bombeado pôr pulso.

Exemplo : 500 ml em 100 pulsos = 5 ml pôr pulso.
Multiplique este resultado pelo numero de pulsos pôr minuto esperado (pôr controle automati co), pôr hora ou pôr dia e compare com o requisito de vazão.

8-Ajuste o comprimento de stroke (botão inferior do painel) para sua melhor estimativa de correção e repita o procedimento de calibração.

8.0 TROCA DE PEÇAS SOBRESSALENTES-MANUTENÇÃO DE ROTINA

8.1 Despressurizando a linha de descarga (para bombas com válvula multi-funções).

8.1.1-Sempre use roupas protetoras, óculos de segurança e luvas quando realizado qualquer tipo de manutenção ou troca de peças de sua bomba.
8.1.2-Tenha certeza que a válvula de injeção esta devidamente instalada e operando. Se uma válvula de bloqueio estiver instalada após a válvula de injeção esta devera ser fechada.
8.1.3-Tenha certeza que a mangueira de alivio está conectada a válvula multi-funções e que esteja retornando ao tanque.
8.1.4-Gire ¼ de volta o botão da válvula multi-funções. A linha de descarga esta agora sendo despressurizada. Mantenha a válvula aberta até que toda a mangueira de descarga esteja drenada, volte então o botão a posição original.

8.2 Troca do diafragma (Liquifram)

As bombas LMI são desenhadas para uma operação livre de problemas, porem manutenções de rotina em partes elastoméricas são essenciais para uma ótima performance. Isto envolve a troca do diafragma, anéis de selagem, cartuchos das válvulas e mola da válvula de injeção. A LMI recomenda a troca dessas peças no mínimo uma vez pôr ano, no entanto a frequencia de troca dependera da sua aplicação particular.
Quando trocado o diafragma, recomendamos a troca dos cartuchos das válvulas, anéis de selagem e mola da válvula de injeção. Estas peças fazem parte de um kit de reparo (SP-__ ou RPM).

8.2.1 Despressurize cuidadosamente, drene e desconecte a linha de descarga. Coloque a válvula de pé em uma solução de neutralização ou água. Ligue a bomba para limpa-la. Após a lavagem da bomba retire a válvula de pé da solução e bombeie ar até que toda solução seja purgada.
NOTA: Se o liquido não puder ser bombeado devido a ruptura do diafragma, use luvas protetoras, desconecte as válvulas de sucção e descarga, remova os quatro parafusos que fixam o cabeçote e lave-os com solução neutralizante ou água.
8.2.2 Ligue a bomba enquanto esta estiver operando, ajuste o botão do stroke a zero e desligue a bomba.
8.2.3 Com a unidade desligada, desrosqueie o diafragma, prendendo-se cuidadosamente sua lateral e gire-o no sentido anti-horario. Remova o disco atrás do diafragma (existente em alguns modelos de bomba) e verifique se o numero código é o mesmo do novo diafragma.
8.2.4 Reinstale o disco de forma que o pino de alinhamento (se presente) assentar no orifício recesso na EPU.
NOTA: Cuidado para não arranhar a face de teflon do diafragma.
8.2.5 Ligue a bomba e gire o botão do stroke até o ajuste indicado na tabela a seguir para a bomba do modelo em questão localizado na plaqueta do painel de controle. Com bomba operando, rosqueie o novo diafragma no sentido horário até que seu centro defleta para dentro. Desligue a bomba.
8.2.6 Ajuste o diafragma de forma que seu centro fique paralelo a superfície externa do espaçador.
8.2.7 Com o diafragma posicionado, remonte a cabeça da bomba, apertando os parafusos em cruz. Após uma semana de operação verifique os parafusos e se necessário reaperte-os.

For Series
B, C, & E

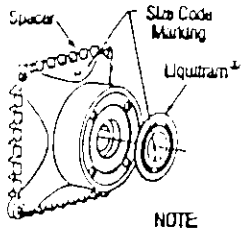

NOTE
Size code markings for pumps supplied with 6.0 Liquiframs® (diaphragms) should be referenced to the 6.0 Black Adapter not the 3.0 Spacer

For Series
A, J, & P

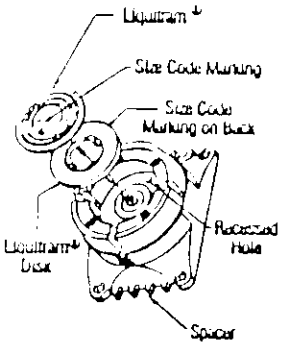

Liquifram® Stroke Setting Chart

Pump Series	Stroke Knob Setting
All A, J, P, Z Series B11, B71, B12, B14, B72, B13, B73, B74 C11, C71, C12, C72, C10, C70, E70, E71, E72	90%
All L Series	50%
C13, C14, C73, C77 E73	70%
C78 E74	50%
All U and M Series	100% but Liquifram® must be completely. Do Not Use Straight Edge.

8.3 Troca do anel de selagem, cartuchos e mola da válvula de injeção.

8.3.1 Verifique no seu guia de peças sobressalentes o código correto do kit de reparo para sua bomba.
8.3.2 Despressurize cuidadosamente e desconecte a linha de descarga. Coloque a válvula de pé em um recipiente com solução neutralizadora do produto bombeado ou água. Ligue a bomba para realizar a lavagem da mesma. Após lavagem retire a válvula de pé do recipiente e deixe a bomba operando com ar até que toda solução purgue do cabeçote.
Se o liquido não puder ser bombeado devido ao diafragma estar rompido, use luvas protetoras e cuidadosamente desconecte as mangueiras e o cabeçote. Coloque o cabeçote e demais peças em solução neutralizante ou água.
8.3.3 Cuidadosamente desconecte uma mangueira pôr vez e remova os cartuchos usados.
8.3.4 Instale novos cartuchos em seus respectivos locais, observando a posição correta.
8.3.5 Instale a nova mola na válvula de injeção.
NOTA : Despressurize e drene a tubulação para poder desmontar sem riscos a válvula de injeção.

9.0 VERIFICANDO A BOMBA PARA ZERAR O STROKE

9.0.1 Com a bomba operando, gire o botão de stroke totalmente no sentido anti-horario até o zero.
9.0.2 Ouça o ruído da bomba operando. A bomba deve operar silenciosamente na posição de stroke zero.
9.0.3 Se a bomba continuar a gerar ruído quando em zero, o zero deve ser ajustado.(vide itens 9.1 e 9.2 a seguir).

9.1 Botão a pressão

Rechecando o zero e montagem e desmontagem do botão de stroke.

9.1.1 Remova o botão de stroke da bomba segurando-o firmemente o botão e puxando-o na sua direção.
9.1.2 Retire a tampa amarela do botão.
9.1.3 Coloque o botão em uma superfície plana.
9.1.4 Usando alicate de bico, pressione a seção interna do botão enquanto levanta a seção externa.
9.1.5 Coloque a seção interna de volta no eixo do stroke.
9.1.6 Com a bomba operando, zere a bomba girando a seção interna do botão no sentido anti-horário, até que para de pulsar.
9.1.7 Posicione a seção externa do botão de forma que o ponteiro alinhe com o zero no painel.
9.1.8 Pressione a seção externa no conjunto do stroke, um "clik" irá indicar que as peças estão montadas.
9.1.9 Recoloque a capa amarela sobre a seção externa do botão.

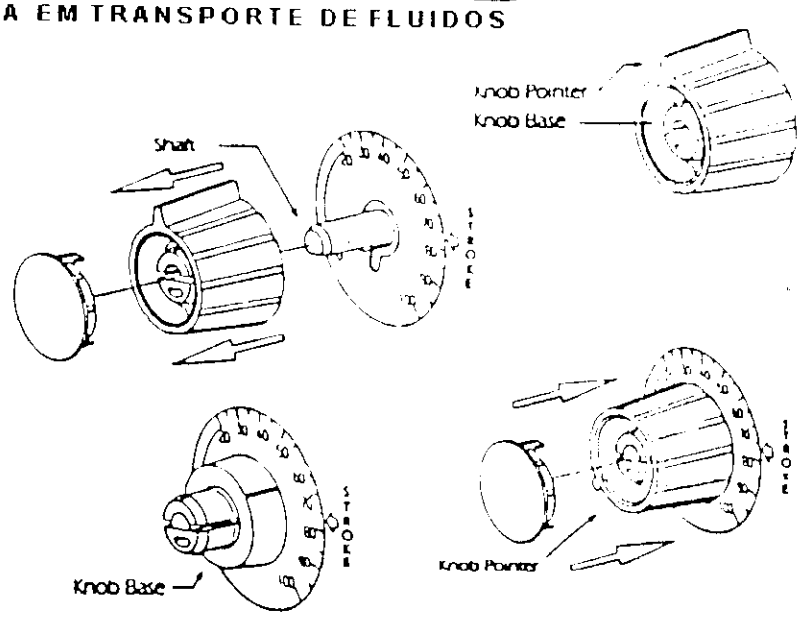

9.2 Botão a parafuso

Rechecando o zero e montando e desmontando o botão de stroke.

9.2.1 Remova a capa amarela do botão.
9.2.2 Segure o botão com alicate de ponta.
9.2.3 Desconecte o botão soltando a porca de 5/16", não há necessidade de retirar a porca.
9.2.4 Remova o botão puxando-o em sua direção.
9.2.5 Com a bomba operando, zere a bomba usando uma chave de fenda para girar o eixo no sentido anti-horário até que a bomba pare de bater.
9.2.6 A bomba está zerada agora.
9.2.7 Posicione o botão no zero e aperte a porca 5/16".
9.2.8 Recoloque a capa amarela.

11.0 RESISTENCIA OHMICA DA EPU

Se sua bomba não estiver operando, porem todas as verificações anteriores foram já realizadas, verifique a resistência ôhmica da unidade eletromagnética (EPU), conforme tabela abaixo Sua unidade eletromagnética poderá estar queimada, em curto ou com baixa isolação.
NOTA : Deixe a bomba esfriar completamente antes de medir a resistência ôhmica. Uma EPU Que operou pôr cerca de 10 horas pode apresentar um valor de até 20% acima no normal.

Pump Series	Voltage	Coil Resistance (Ohms) @ 20°C (68° F)
A14, A15, A16, A34, A74, A75, A76, A94, A95, A96, J02, J03, J04, J05, J06, J13, J15, J16, PW4, PW5, PW6, P04, P05, P06, P14, P15, P16, U01, U02, U03	115 VAC	76 - 87
	230 VAC	307 - 333
A17, A37, A77, A97, A18, A78, P02, P03, P12, P13 (NOTE 1)	115 VAC	152 - 176
	230 VAC	583 - 671
A17, A37, A77, A97, A18, A78, P02, P03, P12, P13, P77 (NOTE 2)	115 VAC	76- 87
	230 VAC	291- 335
J54D, J55D, J56D	12 VDC	1.1 - 1.3
D10, D11, D12, D13, D14, D70, D71, D72, D73, D74	115 VAC	25.7- [illegible]
	230 VAC	97 - 112
E70, E71, E72, E73, E74	115 VAC	22.8 - [illegible]
	230 VAC	91 - 105
B11, B12, B13, B14, B71, B72, B73, B74	115 VAC	43 - 49
	230 VAC	167 - 193
C10, C11, C12, C13, C14, C70, C71, C72, C73, C74	115 VAC	22.8 - [illegible]
	230 VAC	91 - 105
C77, C78	115 VAC	14.4 - 16.6
	230 VAC	57.7 - 66.3

FONE (5511) 6914 8255 FACSIMILE (5511) 6163 6888
RUA OLIVEIRA MELO 686 - IPIRANGA - CEP 04271-000 - SÃO PAULO - SP

PROBLEMAS	CAUSA PROVAVEL	SOLUÇÃO
Baixa vazão ou bomba não vence a contra pressão de descarga	1-A pressão de descarga do sistema está acima da pressão máxima da bomba instalada	1-A pressão de injeção não pode exceder a máxima pressão da bomba, consulte-nos para especificação do modelo mais adequado
	2-Anéis de sede gastos ou montados ao contrario.	2-Troque os cartuchos ou verifique sua posição correta
	3-Diafragma rompido	3-Verifique e troque o diafragma
	4-Ajuste de stroke incorreto	4-verifique o zero da bomba e regule o stroke corretamente
	5-A tubulação de descarga esta muito longa	5-Tubulações muito longas pode aumentar a perda de carga pôr atrito a ponto de exceder a máxima pressão da bomba
	6-Filtro da válvula de pé entupido	6-Remova o filtro e limpe-o
Bomba não funciona	1-Bomba desligada ou não plugada	1-Ligue a bomba ou conecte o cabo elétrico
	2-Falha na EPU	2-Verifique resistência ôhmica do EPU
	3-Falha no pulsor	3-Verifique se não está queimado
Excesso de vazão	1-Sifonamento	1-Mude o ponto de injeção para outro ponto de maior pressão ou instale uma válvula 4FV na descarga.
	2-Pouca ou nenhuma pressão na descarga	2-Se a pressão de descarga for inferior a 25 psi instale uma válvula 4FV na descarga
	3-Excesso de velocidade (pulsos pôr minuto)	3-Verifique o potenciômetro ou o pulsor.

10.0 PROBLEMAS, POSSIVEIS CAUSAS E SOLUÇÕES

PROBLEMAS	CAUSA PROVAVEL	SOLUÇÃO
Bomba não escorva	1-Bomba desligada ou não plugada	1-Ligue a bomba ou conecte o cabo elétrico
	2-Ajustes da vazão setados incorretamente	2-Sempre escorve a bomba com speed 80% e stroke 100%
	3-Válvula de pé não está na vertical ou no fundo do tanque	3-A válvula de pé deve sempre estar na vertical abaixo do nível mínimo
	4-A linha de sucção da bomba está muito longa	4-Sucção máxima de 1,5m, bombas de alta viscosidade devem ser instaladas afogadas.
	5-Tudo de sucção está curvado ou enrolado no tanque	5-O tubo de sucção deve estar na vertical ou mais reto possível utilize peso de cerâmica.
	6-Conexões estão muito apertadas	6-Não utilize ferramenta ou torque excessivo para apertar as conexões
	7-Ar na sucção	7-Tubo de sucção deverá estar sempre na vertical
	8-Excesso de pressão na descarga	8-Desconecte a linha de descarga até a bomba escorvar e conecte-a novamente após a escorva
Bomba perde escorva	1-A solução no tanque acabou	1-Repreencha o tanque de sucção
	2-A válvula de pé não esta na vertical ou no fundo do tanque	2-A válvula de pé deve sempre estar na vertical abaixo do nível mínimo
	3-A linha de sucção da bomba está muito longa	3-Sucção máxima de 1,5m, bombas de alta viscosidade devem ser instaladas afogadas.
	4-Tubo de sucção está curvado ou enrolado no tanque	4-O tubo de sucção deverá estar na vertical ou mais reto possível utilize peso de cerâmica.
	5-Conexões estão muito apertadas	5-Não utilize ferramenta ou torque excessivo para operar as conexões
	6-Ar na sucção	6-Tubo de sucção deverá estar sempre na vertical
	7-Entrada de ar na sucção	7-Verifique furos e rachaduras, se necessário troque mangueira
Vazamentos nas mangueiras	1-terminal dos tubos desgastados	1-Corte 25mm aproximadamente da ponta das mangueiras e conecte-as novamente.
	2-Conexão quebrada ou frouxa	2-Troque as conexões. Utilize somente aperto manual.
	3-Anéis sede desgastados.	3-Troque os cartuchos das válvulas
	4-Solução atacando quimicamente o material	4-Consulte-nos para verificação de material mais adequado

7. MEDIDORES DE PRESSÃO

Bourdon Tube Pressure Gauges

All Stainless Steel Construction

Industrial Series Liquid Fillable • Type 23X.53

Pressure Gauges

Application
Suitable for corrosive environments compatible with 316 stainless steel wetted parts, dry and liquid fillable case, where vibration and/or pressure pulsation occur in liquid or gaseous media which will not obstruct the pressure system.

Sizes (All sizes not stocked)
2", 2½" and 4" (50, 63 and 100 mm)

Accuracy
2", 2½" ± 1.5% of span
4" ± 1.0% of span (ASME B40.1 Grade 1A)

Ranges (All ranges not stocked)
Vacuum / Compound to 30"HG / 0 / 200 PSI
Pressure from 15 PSI to 15,000 PSI
or other equivalent units of pressure or vacuum

Working Range

2" & 2½"	Steady:	3/4 of full scale value
	Fluctuating:	2/3 of full scale value
	Short time:	full scale value
4"	Steady:	Full scale value
	Fluctuating:	0.9 x full scale value
	Short time:	1.3 x full scale value

Operating Temperature
Ambient: -40°F to 140°F (-40°C to 60°C) Note 1
Media: max. 212°F (+100°C)

Temperature Error
Additional error when temperature changes from reference temperature of 68°F (20°C) ±0.4% for every 18°F (10°C) rising or falling. Percentage of span.

Standard Features

Connection
Material: 316 stainless steel
Lower mount (LM)
Center back mount (CBM) 2½"
Lower back mount (LBM) 4"
1/4" or 1/2" NPT limited to wrench flat area

Bourdon Tube
Material: 316 stainless steel
30"Hg (Vac) to 1000 PSI C-type - 2" & 2½"
30"Hg (Vac) to 1500 PSI C-type - 4"
1500 PSI to 15,000 PSI helical type - 2" & 2½"
2000 PSI to 15,000 PSI helical type - 4"

Movement
Stainless steel

Dial
White aluminum with black lettering. 2½" with stop pin.

Pointer
Black aluminum, non-adjustable

Case
304 stainless steel with vent plug and SS crimping ring.
Welded case/socket connection

Weather Protection
Weather resistant (NEMA 3 / IP 54) - dry case
Weather tight (NEMA 4X / IP 65) - liquid-filled case

Standard Scale
PSI
PSI, PSI/BAR, PSI/KPA, PSI/KG/CM² (2½" CBM)

Window Gasket
Buna-N

Case Filling
232.53 - None
233.53 - Glycerine

Window
Polycarbonate
Acryic (4")

ORDER OPTIONS (min. order may apply)
Custom dial layout
Steel zinc plated u-clamp bracket (field installable)
Stainless steel u-clamp bracket (field installable)
Pressure compensating membrane window for filled gauges
Stainless steel polished front flange (CBM or LBM only)
Stainless steel rear flange
316 SS threaded restrictor
Glycerine, silicone, or fluorolube case filling **(Type 233.53)** (Note 1)
Special connections limited to wrench flat area
Other pressure scales available:
Bar, kPa, MPa, Kg/cm² and dual scales
DIN standards
Cleaned for oxygen service
Externally adjustable red drag pointer (max. hand)
Externally adjustable red mark pointer (set pointer)

Note 1 Temperature Ranges (Liquid filled gauges)
Glycerine: -4°F to 140°F (-20°C to 60°C)
Silicone: -40°F to 140°F (-40°C to 60°C)

Dimensions:

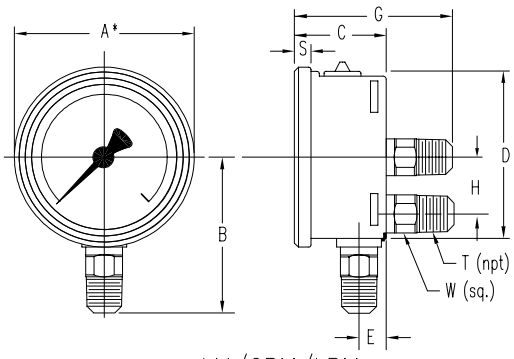

23X.53 LM/CBM/LBM

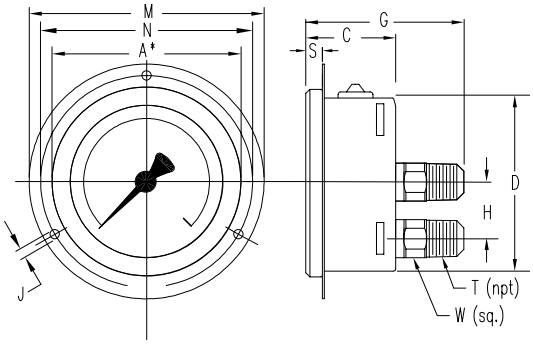

23X.53 CBM/LBM/FF

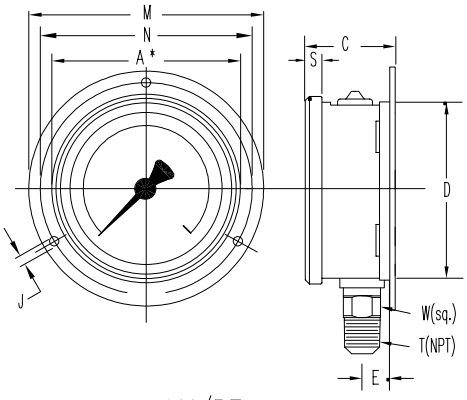

23X.53 LM/RF

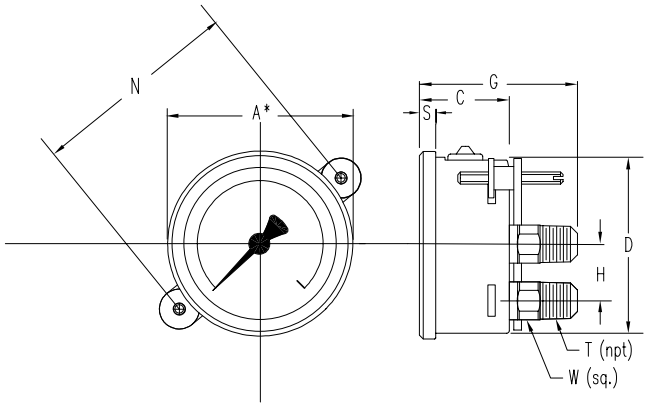

23X.53 CBM/LBM/UC

A* NOMINAL SIZE

TYPE/SIZE	WEIGHT	KEY	A*	B	C	D	E	G	H	J	L	M	N	S	T	W
23X.53 2"	0.27 lbs. + 0.06 lbs. if filled	mm	50	48	30	50	12	53	--	3.6	6.5	71	60	5.5	--	14
		in	2	1.89	1.18	1.97	0.47	2.09		0.14	0.26	2.80	2.36	0.22	1/4"	0.55
23X.53 2.5"	0.36 lbs. + 0.08 lbs. if filled	mm	63	54	32	62	13	54	--	3.6	7.5	85	75	6.5	--	14
		in	2.5	2.13	1.26	2.44	0.51	2.13		0.14	0.30	3.35	2.95	0.26	1/4"	0.55
23X.53 4"	1.10 lbs. + 0.66 lbs. if filled	mm	100	87	48	100	15.5	79.5	30	4.8	9	132	116	8	--	22
		in	4	3.43	1.89	3.94	0.61	3.13	1.18	0.19	0.35	5.20	4.57	0.31	1/2"	0.87

NOTE: For 1/4" NPT connections on 3" and 4" gauges, reduce B* dimension by 5 mm / 0.02 in.

Panel cut-out dimensions: D + 1mm

THE MEASURE OF

Total Performance™

Ordering Information:
State computer part number (if available) / type number / size / range / connection size and location / options required.

05/02

WIKA Instrument Corporation
1000 Wiegand Boulevard
Lawrenceville, Georgia 30043-5868
Tel: 770-513-8200 Fax: 770-338-5118
http://www.wika.com e-mail: info@wika.com

USER'S GUIDE

CodeLine™ OCTA Series

Side Ported Pressure Vessels

For Reverse Osmosis, Nano-Filtration, Ultra-Filtration & Micro-Filtration

MODEL OCTA 80R15

150 PSI

MODEL OCTA 80R30

300 PSI

MODEL OCTA 80R45

450 PSI

MODEL OCTA 80R60

600 PSI

MODEL OCTA 80R100

1000 PSI

MODEL OCTA 80R120

1200 PSI

Chardon, Ohio. Phone: 1-440-286-4116 • Fax: 1-440-286-7432
Goa, India. Phone: 91-832-2883300 • Fax: 91-832-2883312

Australia +61-40-2251-777 • China +86-215-8777-088 • India +91-832-2883300
Middle East +97-14-345-5074 • UK +44-77-689-79-3901 • USA +1-440-286-4116

Please visit our website at www.codeline.com

Product Bulletin 94019.

Preface

The CodeLine™ OCTA Series

Family of Vessels

The CodeLine™ OCTA Series is a standardized family of fiberglass pressure vessels designed for continuous, long-term use as housings for reverse osmosis, nano-filtration, ultra-filtration and micro-filtration membranes. Any make of an eight-inch diameter spiral-wound membrane element is easily accommodated.

The CodeLine™ OCTA Series is designed for different pressure ratings. They are unified in design and have maximum number of parts in common. Each model has the appropriate strength and materials of construction to provide years of continuous use in typical service when properly maintained. Each model is available in lengths to house from one to eight 40-inch long membrane elements.

The CodeLine™ OCTA Series is designed and built in accordance with the engineering standards of the Boiler and Pressure Vessel Code of the American Society of Mechanical Engineers (ASME Code). A vessel marked with an ASME Code stamp is accepted worldwide as being built to the highest standards of safety.

Each model in the CodeLine™ OCTA Series has passed rigorous ASME Code qualification tests which require that vessels not burst at less than six times their design pressure. Safe use is further assured in that vessels will not fail catastrophically; overpressure is relieved by weeping through the fiberglass shell. Also, every production vessel is hydro-tested to 1.3 times its design pressure to verify structural integrity.

While undertaking regular maintenance / repair / replacement of a pressure vessel it may be necessary to remove the pressure vessel from a bank. Also ensure sufficient spares are available for replacement. Care must be taken in installation / removal of the vessel to avoid damage to the shell. Damage to the shell can result in catastrophic failure and possible injury to personnel. Any corrections or recommendations for improvement of this manual should be addressed to:

CodeLine Division
Pentair Water India Pvt. Ltd.
L/52-55, Verna Industrial Area
Verna, Goa – 403 722. INDIA
Tel: 91-832-2883300 Fax: 91-832-2883312

CodeLine™
Pentair Water

Contents

CodeLine™
Pentair Water

Operation and Maintenance Guide

Introduction

MODELS

OCTA 80R15	OCTA 80R30	OCTA 80R45	OCTA 80R60	OCTA 80R100	OCTA 80R120
150 PSI	300 PSI	450 PSI	600 PSI	1000 PSI	1200 PSI

This section is a guide to proper operation and maintenance of CodeLine™ OCTA Series pressure vessels.

Good industrial practice must be used in applying this information to assure safe vessel use. These guidelines are not intended to relieve the user from full responsibility for correct operation and maintenance of the vessels.

For technical specifications and dimensions, refer to the Engineering Drawings of each specific model.

The information in all sections must be carefully followed for the vessel to provide the safe, long service life for which it is designed.

DANGER - High Pressure Device

Operation of this vessel may cause loss of life, severe bodily harm, and / or property damage if not correctly installed, operated and maintained. Read and understand all guidelines given in this bulletin before attempting to open, service or operate this vessel.

Failure to follow these guidelines and observe every precaution may result in malfunction and could result in catastrophic failure.

Misuse, incorrect assembly or use of damaged or corroded components can result in explosive release of the end closure.

We recommend that only a qualified technician experienced in servicing high-pressure hydraulic systems, open, close and service this vessel.

Safety Precautions

DO

- Read, understand and follow every part of this section. Failure to take every precaution may void warranty and could result in explosive head failure.
- Install in an area where water leakage resulting from a vessel or piping malfunction would not damage sensitive equipment, such as electronic components.
- Install protective covering over equipment located below pressure vessels when performing maintenance.
- Verify that head locking components are properly placed and secured.
- Inspect end closures regularly, replace deteriorated components and correct causes of corrosion.
- Follow membrane element manufacturer's recommendations for loading elements into vessel (see Replacing Elements on page no.13).

DO NOT

- Operate vessel at pressures in excess of their specific rating.
- Service any component until you verify that pressure is fully relieved from the vessel.
- Use corroded components. Use of such components may result in catastrophic failure.
- Pressurize vessel until after visually inspecting to ensure that both locking segments are correctly installed and seated in their grooves.
- Tolerate leaks or allow end closures to be wetted in any way.
- Allow petroleum or silicone based products to come in contact with membrane elements during installation or maintenance.
- Pressurize vessel without element in place, unless permeate ports are plugged properly.
- Overtighten fittings in ports.
- Stand or climb on the pressure vessels, or the feed/concentrate or permeate ports.
- Allow force in excess of 15 lbs to be applied laterally to feed, concentrate or permeate ports.

CodeLine™
Pentair Water

Pre-Pressurization Checklist

DANGER - High Pressure Device

Operation of this vessel may cause loss of life, severe bodily harm, and / or property damage if not correctly installed, operated and maintained. Read and understand all guidelines given in this bulletin before attempting to open, service or operate this vessel.

Failure to follow these guidelines and observe every precaution may result in malfunction and could result in catastrophic failure.

Misuse, incorrect assembly or use of damaged or corroded components can result in explosive release of the end closure.

We recommend that only a qualified technician experienced in servicing high-pressure hydraulic systems, open, close and service this vessel.

This checklist is an aid intended to remind servicing and operating personnel of the detailed guidelines given in the CodeLine™ OCTA series operation and maintenance guide. The checklist alone does not include all the details needed for safe vessel operation. Use the checklist each time any service operation is carried out to ensure that each step is completed before pressurizing the vessel.

MEMBRANE ELEMENTS

- [ ] Installed per manufacturer's recommendation.
- [ ] Feed flow direction correctly noted and elements correctly oriented.

HEAD ASSEMBLY INTERLOCK

- [ ] Locking segment groove at each end of shell is clean, free of corrosion and / or delamination with outboard face of groove true and is in sound condition.
- [ ] All components in as-new condition, clean and free of damage or corrosion.
- [ ] Locking segment is fully seated in the locking segment groove of the vessel.

ELEMENT INTERFACE

- [ ] Adapters installed at both ends and element column.
- [ ] Thrust cone installed downstream (concentrate or brine end) of the element column.

HEAD

- [ ] All components in as-new condition clean and free of damage or corrosion.
- [ ] All components are properly assembled with new, freshly lubricated seals.
- [ ] Permeate port locking ring installed.
- [ ] Head marked with proper pressure rating for system.

PIPING CONNECTIONS

- [ ] Properly aligned (strain free) and secured.
- [ ] Leak free.

Assembled by:_____ Date of assembly:_____

Checked by:_____ Date of inspection:_____

The following vessels listed by serial number below were serviced under this checklist:

_____ _____ _____ _____ _____

_____ _____ _____ _____ _____

Installation Notes

Even though your vessel may be installed by others, there are few installation checks that you should make before system start–up. Vessels must be installed correctly to ensure safe use and long service life.

☐ Check that vessels are mounted on horizontal support frame using compatible black urethane saddles with hold–down straps snug, not tight.

☐ Check that each vessel is free to expand under pressure, shell is not rigidly clamped in place, and piping to vessel is not connected using rigid connections.

WARNING

FAILURE TO ALLOW EXPANSION IN DIAMETER OR LENGTH WILL RESULT IN VESSEL DAMAGE

☐ Check that vessel does not support any other component; that piping manifolds are separately mounted, and that interconnection piping is self supported and connected to the pressure vessel with Victaulic® couplings. (Use of Victaulic® couplings is recommended).

If you have any question about the installation of vessel in your unit, contact your supplier. For installation guidelines, refer to page no.26-30.

VESSEL INFORMATION CHART						
	OCTA 80R15	OCTA 80R30	OCTA 80R45	OCTA 80R60	OCTA 80R100	OCTA 80R120
MAX OPERATING PRESSURE (PSI)	150	300	450	600	1000	1200
OPERATING TEMPERATURE RANGE	20° F - 190° F	20° F - 190° F	20° F - 190° F	20° F - 190° F	20° F - 150° F	20° F - 150° F
ASME FACTORY TEST PRESSURE (PSI) [1.3 times the design pressure]	195	390	585	780	1300	1560
CE FACTORY TEST PRESSURE (PSI) [1.5 times the design pressure]	225	450	675	900	1500	1800
PROTOTYPE MIN. QUALIFICATION PRESSURE (PSI)	900	1800	2700	3600	6000	7200
ENGINEERING DRAWING NUMBER	99119	99120	99121	99122	99123	99124
USER'S GUIDE	94109					

Component Identification

OCTA 80R15, OCTA 80R30, OCTA 80R45, OCTA 80R60 (NON-CODED)

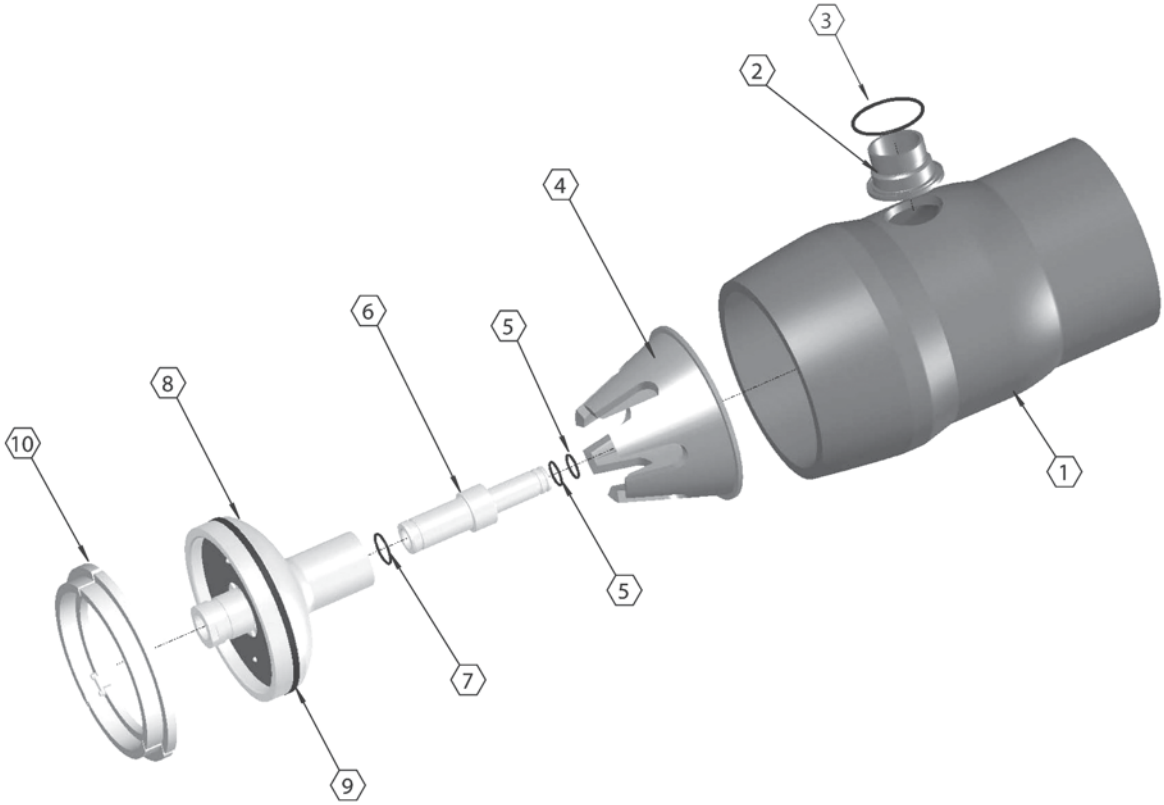

Dwg. Ref.	Qty. Per	Part Number	Description
1	1	Order Section	Shell
2	As Reqd.	Order Section	F/C Port
3	As Reqd.	Order Section	F/C Port Seal
4	1	52609	Thrust Cone
5	As Reqd.	As Reqd.	PWT Seal
6	2	As Reqd.	Adapter
7	2	52245	Adapter Seal
8	2	52570	Noryl Head Assy.
9	2	52574	Head Seal
10	2	52510	Locking Ring
11*	3**	45042	Strap Assy
12*	3**	52169	Universal Saddle
13*	3**	46265	Strap Screw
* Not shown in above cross section view			
** 2 Each furnished with length code 1, 2 & 3			

Component Identification contd...

OCTA 80R15, OCTA 80R30, OCTA 80R45, OCTA 80R60 (CODED)

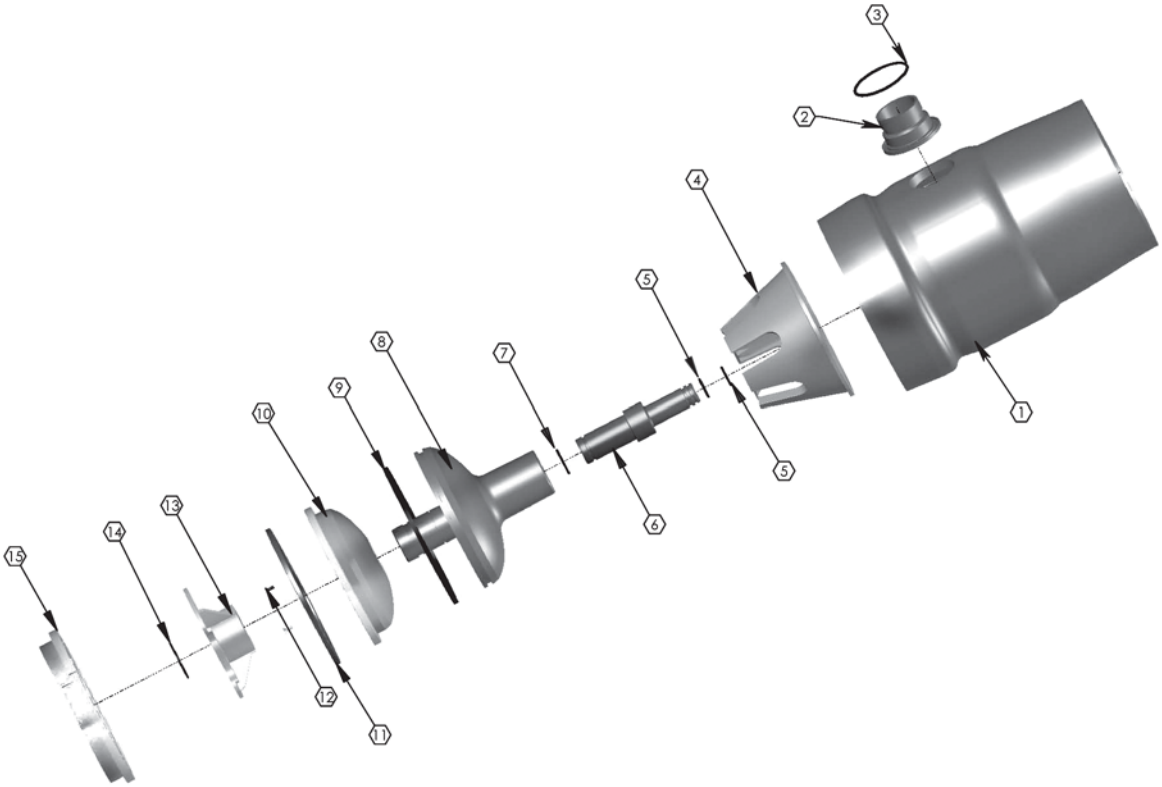

Dwg. Ref.	Qty. Per	Part Number	Description
1	1	Order Section	Shell
2	As Reqd.	Order Section	F/C Port
3	As Reqd.	Order Section	F/C Port Seal
4	1	52609	Thrust Cone
5	As Reqd.	As Reqd.	PWT Seal
6	2	As Reqd.	Adapter
7	2	52245	Adapter Seal
8	2	52506	Universal Noryl Head
9	2	52574	Head Seal
10	2	52501	Elliptical Head
11	2	52576	Spacer Plate
12	4	52590	Screw
13	2	52500	Securing Plate
14	2	45247	Port Retainer
15	2	52510	Locking Ring
16*	3**	45042	Strap Assy
17*	3**	52169	Universal Saddle
18*	3**	46265	Strap Screw
* Not shown in above cross section view			
** 2 Each furnished with length code 1, 2 & 3			

Component Identification contd...

OCTA 80R100, OCTA 80R120 (NON-CODED & CODED)

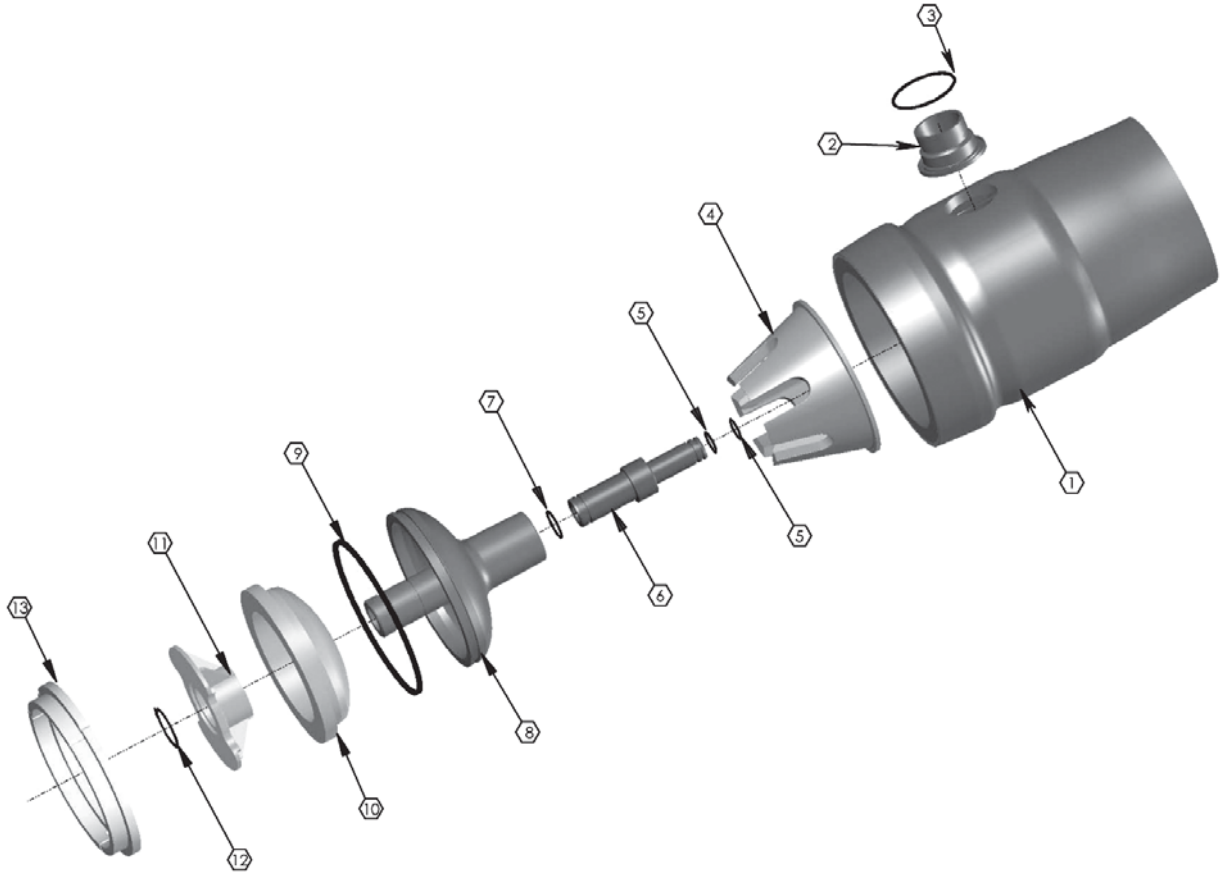

Dwg. Ref.	Qty. Per	Part Number	Description
1	1	Order Section	Shell
2	As Reqd.	Order Section	F/C Port
3	As Reqd.	Order Section	F/C Port Seal
4	1	52609	Thrust Cone
5	As Reqd.	As Reqd.	PWT Seal
6	2	As Reqd.	Adapter
7	2	52245	Adapter Seal
8	2	52506	Universal Noryl Head
9	2	52574	Head Seal
10	2	52502	Elliptical Head
11	2	52500	Securing Plate
12	2	45247	Port Retainer
13	2	52510	Locking Ring
14*	3**	45042	Strap Assy
15*	3**	52169	Universal Saddle
16*	3**	46265	Strap Screw
* Not shown in above cross section view			
** 2 Each furnished with length code 1, 2 & 3			

Opening Vessel

Step-By Step Guide

WARNING

Read all guidelines in this section before attempting to open the vessel. Do not attempt to service any component without first verifying that vessel PRESSURE is fully relieved from the vessel. Attempting to remove any component before pressure is relieved may result in EXPLOSIVE release of head.

Step 1 Relieve pressure

1. Shut off all sources of pressure and relieve pressure from the vessel, following the system manufacturer's recommendations.

Step 2 Disconnect permeate port

1. Disconnect permeate piping as required at nearest convenient joint, being careful not to place undue stress on the threaded connections of the permeate port(s).

CAUTION

DO NOT tap on fittings as this could damage ports.

Step 3 Examine end enclosure

1. Examine enclosure of vessel for corrosion. Metal oxidation products and mineral deposits can interfere with vessel disassembly. If any is evident, proceed as follows:

   a Loosen any deposits with a small wire brush and / or a medium grade piece of Scotchbrite™.

   b Flush away loosened deposits with clean water.

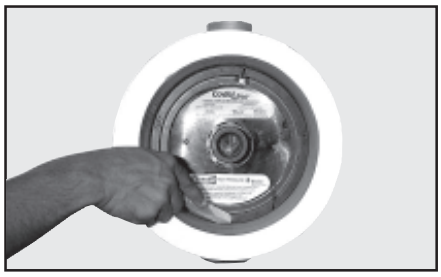

Loosening deposits

Step 4 Removing locking ring

1. Remove the locking segments by lifting the bottom segment and then collapsing the LH & RH segment.

Removing Locking Segment

2. Once the locking segment has been removed, examine the area for burrs or dings which could damage the head or membrane. If necessary, use ScotchBrite™ to smooth the area.

Step 5 Removing head assembly

A. *Removing head assembly by hand*

1. Grasp permeate port/securing plate and pull head straight out. A sharp forceful tug may be required to start head assembly moving. Care should be taken to avoid placing too much stress on the product port threads.

Removing Head Assembly

Opening the vessel contd...

NOTE

It may be necessary to rock the head slightly and/or tap the head inboard to break head seal bond.

B Removing head assembly using tool

1. Using the Head Removal Tool, fix the 1" NPT connection to the permeate end and tighten the nut till the head comes out.

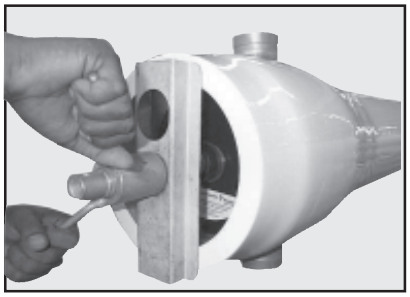

Removing Head Assembly using Head Removing Tool

Repeat above procedure for the opposite end of the vessel.

Replacing Elements

WARNING

Read all parts of this section before replacing elements. These procedures are provided for general information only. Elements should be installed in accordance with the element manufacturer's recommendations.

Do not attempt to service any components without first verifying that VESSEL pressure is fully relieved from the vessel.

MAKE SURE THAT THE CENTRAL (PERMEATE) TUBE OF MEMBRANE ELEMENT STACK IS CONNECTED TO THE PERMEATE PORTS INSIDE BOTH ENDS OF VESSEL, using the adapters supplied. Pressurizing vessel without elements and both adapters installed could result in explosive head failure.

Preliminary Steps

Do not proceed with step by step instructions until...

1. All pressure has been relieved from the vessel, following system manufacturer's recommendations.

2. Both heads have been removed from vessel following step by step instructions in the Opening Vessel section.

Step 1 Remove element interface hardware.

1. Remove thrust cone from downstream (concentrate) end.

2. Remove adapters from elements at each end.

Step 2 Element removal

1. Remove elements from the vessel following element manufacturer's instructions. Clean off any excess lubricant from vessel inside diameter before removing elements.

NOTE

Always remove and install elements in the direction of feed flow. The feed end (upstream end) is the end plumbed most directly to the pump.

A record of element serial numbers and locations should be made and checked during loading.

Do not scratch or damage vessel bore when removing or installing elements.

Step 3 Element loading

1. Examine the inside diameter of the vessel for scratches or imperfections that may affect sealing capability of head or element seals. Corrosion deposits or other foreign matter, including any excess lubricant, should be removed as described in Closing Vessel, Step 1 on page no.16.

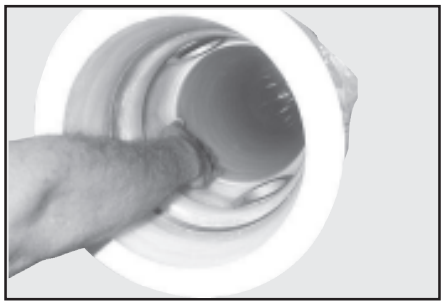

Examining for scratches

Replacing Elements contd...

2. Flush out the vessel with clean water to remove any dust and debris.

3. Examine membrane element surfaces for any imperfection which could scratch the vessel bore. Pay particular attention to edges of anti-telescope device (ATD/brine seal carrier).

4. Using an approximate 50% mixture of glycerine in water, lubricate the inside of the vessel. This may best be accomplished using a suitably sized swab soaked in the mixture. This procedure will ease membrane element loading and reduce chance of scratching the vessel bore.

NOTE

If the brine seal is not installed on the element and the element supplier does not specify otherwise, a brine seal should be placed on the upstream end of the elements. Open side of a seal must face upstream.

5. Load the first element into the upstream end of the vessel. Leave a few inches of the element projecting from the vessel to facilitate interconnection to the next element.

6. Apply a light film of a non-petroleum based lubricant, such as Parker Super O-Lube™, to the interconnector O-ring. (The amount of O-Lube should be just enough to give a lustre to the O-ring. Excess O-lube must be removed to prevent possibility of element contamination).

7. Assemble the interconnector to the loaded element.

8. Line up the next element to be loaded and assemble it to the interconnector already assembled on first element.

CAUTION

Maintain element alignment carefully during assembly procedure. Do not allow element weight to be supported by interconnector.

Mis-alignment can result in damage to interconnectors or permeate tubes or to element outer surface.

9. Push both elements into the vessel until a few inches are projecting from the vessel. Repeat loading process until all elements are installed.

10. When the final element is installed, push the element stack forward until the face of the first (downstream) element is just short of counter bore ramp.

NOTE

Take care to avoid pushing elements too far as it can be difficult to push the stack in a reverse direction.

Alternate to Measurement Method

- Slide the small end of a thrust cone over the adapter end of the permeate port on a head assembly.
- Insert head assembly without thrust cone or adapter, into downstream end of vessel.
- Install locking segment fully into groove.
- Load elements as described in Steps 5 through 9.
- Remove head assembly and move to Step 4 - Install Element Interface Hardware.

Replacing Elements contd...

Step 4 Install element interface hardware

1. Assemble adapter to element permeate tube at each end of vessel.

2. Install Head Seals.

WARNING

Connect the central (permeate) tube of the membrane element stack, with an adapter on each end, to the permeate port in the head at both ends of vessel. Pressurizing vessel without both adapters installed could result in explosive head failure.

3. Install the thrust cone over the permeate port on the head assembly at the downstream (Concentrate) end of the vessel.

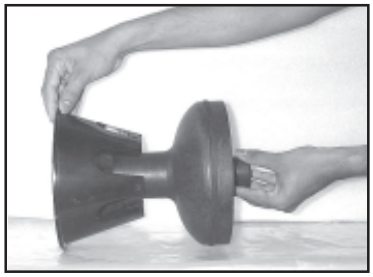

Installing Thrust Cone

CAUTION

Install the thrust cone at the downstream (Concentrate) end. Serious damage may result if the thrust cone is not installed in the correct location.

Closing The Vessel

WARNING

Read all guidelines in this section before attempting to close the vessel.

CHECK THE HEAD ASSEMBLY FOR CORROSION AS DESCRIBED IN THE HEAD REBUILDING SECTION. CORRODED PARTS CAN RESULT IN CATASTROPHIC FAILURE.

Do not pressurize vessel until after visually inspecting to ensure that head locking segment is fully seated in the locking groove.

Preliminary steps

Do not proceed until...

1. Elements and adapters have been installed in the vessel following guidelines in the Replacing Elements section.

2. Head has been checked for correct component assembly by following step-by-step instructions in the Head Rebuilding section.

3. Vessel has been shimmed to prevent movement of the membrane elements if required. See page no.25 of the Trouble Shooting section for a description of when shimming is required.

Step 1 Inspect shell inside surface

1. Inspect the vessel inside surface for any corrosion deposits or other foreign matter. If any are found, clean the surface as follows:

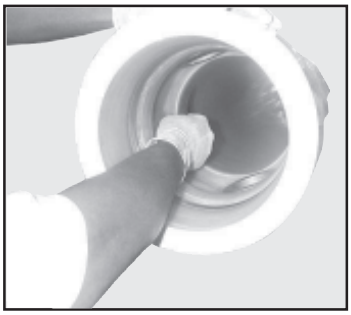

Cleaning inside the vessel

Using a medium or finer grade of Scotchbrite™ and a mild soap solution, clean each end of the vessel inner surface upto 8” inch from each end of the vessel.

Rinse away all loosened deposits from the shell inside surface using clean fresh water.

2. Inspect the vessel inside surface for scratches or other damage which could cause leaks. Vessels that leak must be replaced.

3. Inspect Feed/Concentrate port seals and attachments for internal and external damage or deterioration.

CAUTION

Never attempt to repair a fiberglass shell.

Step 2 Head seal and head lubrication

1. Install head seal in the groove provided in the head and lubricate O.D. of head seal only. Apply a thin layer of lubricant in the seal area.

NOTE

Any remaining lubricant should be cleaned from the vessel bore before applying fresh lubricant. Glycerine is a commercially available lubricant that will not foul membranes.

** Contact Pentair for guidance if damage to the vessel’s internal surface or Feed/Concentrate port, seals or attachments are discovered during inspection.*

Closing The Vessel contd...

Step 3 Install Head

1. Hold the head assembly square to the axis of the shell by grasping the securing plate/ permeate port. Slide it straight in until a slight resistance is felt.

2. Grasp tightly and push the head in as far as it will go. (A sharp, forceful thrust or may be light tapping with a mallet may be necessary to enter the head into the vessel bore.) When the head is correctly positioned, the locking groove will be exposed.

Installing Head Assembly

NOTE

In some installations it may be advisable to tighten a system-required permeate port nipple or fitting into the Permeate port before the head is assembled into the vessel.

Do not tighten a component into the Permeate port more than one turn past hand tight.

Step 4 Install interlock

1. Carefully wipe out any debris or moisture from the locking segment groove. The groove must be clear and dry before proceeding.

2. With the head assembly installed in shell, hold the locking ring and collapse the shortest segment which is marked as 'Bottom' to the center and achieve a eye shape with left segment at the top, bottom segment at the center and right segment at the bottom, as shown in the following picture.

Locking Segment (Eye-shaped)

3. Place the locking ring in the locking groove with flat face facing the head.

4. Open up the collapsed segment of the locking ring. The locking rings should be positioned as per the markings on the segment.

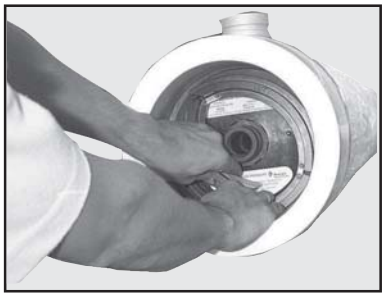

Installing Locking Segment

5. Verify that the locking ring is fully seated in the groove before proceeding.

WARNING

If the locking ring is not installed as per the markings on the segment, the bottom segment will collapse. Incorrect assembly or installation can result in EXPLOSIVE HEAD failure.

Step 5 Reconnect Permeate Piping

1. Reconnect manifold piping to the vessel Permeate port. Using teflon tape or anaerobic sealant on all threaded connections will help ensure a leak-free assembly.

Closing The Vessel contd...

CAUTION

Do not tighten a component into permeate port more than one turn past hand tight.

It is vitally important that the following checks be carried out before any attempt is made to pressurize the vessel.

It is recommended that the Pre-Pressurization Checks mentioned below be used to systematically verify that all steps have been performed.

HEAD ASSEMBLY

Verify the following at each end of the vessel:
1. Head assembly is in good condition, with no evidence of damage or corrosion. See the sections on Head Rebuilding and Maintenance.

2. Locking segment is properly in place.

MEMBRANE ELEMENTS

Verify that...
1. Elements are installed in the vessel.
2. Element adapters are installed at each end of the vessel.
3. Thrust cone is installed at downstream end of the vessel.

PIPING CONNECTIONS

1. Check all piping connections to ensure that they will provide a leak-free seal.

Step 7 Pressurization

1. After following the above pre-pressurization checks, pressurize vessel in accordance with element manufacturer's specifications.

2. Vessels should be filled slowly to assist trapped air in escaping.

3. Vessels should be pressurized slowly to avoid damage to membrane elements and vessel components.

WARNING

DO NOT PRESSURIZE the VESSEL WITHOUT ELEMENTS INSTALLED.

Do not pressurize the vessel until verifying that the locking segment is properly installed.

Head Re-Building

NOTE

Read all guidelines in this section before attempting to rebuild the head.

Head rebuilding should be performed in a clean work area. Dust or dirt on O-rings or other parts can scratch inner surfaces and cause subsequent leakage.

Replace any components not in "as-new" condition. Re-using corroded or damaged components can result in explosive head failure.

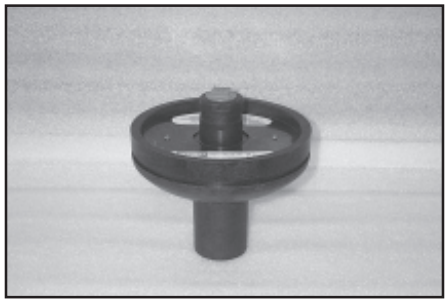

Single Piece Noryl Head
(OCTA 80R15 / 30 / 45 / 60 Non-Coded)

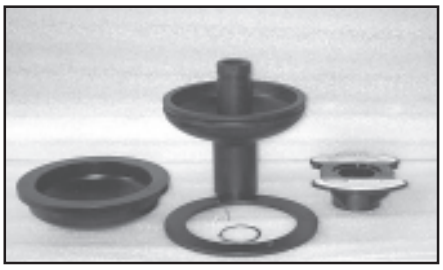

Steel backed Noryl Head
(OCTA 80R15 / 30 / 45 / 60 Coded)

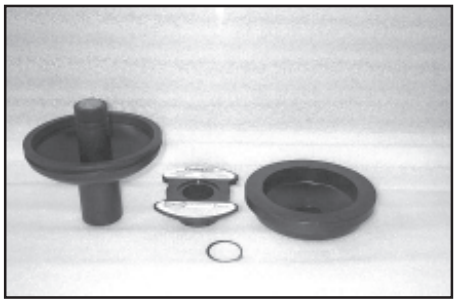

Steel backed Noryl Head
(OCTA 80R100 / 120 Coded & Non-Coded)

Preliminary Steps

Do not proceed with step by step guidelines until...

1. All pressure has been relieved from the vessel, following system manufacturer's recommendations.

2. Head has been removed from the vessel following guidelines in the Opening Vessel section.

To dissemble head

Step 1 Removing Adapter

1. Remove the Membrane Adapter from the permeate port.
   Grasp the end of the adapter in one hand and the permeate port in the other and pull them apart.

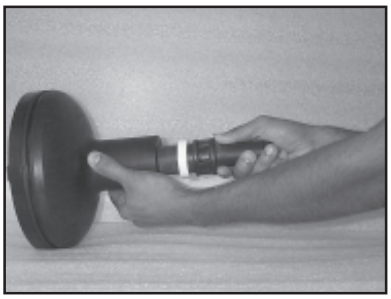

Removing the Adapter

2. Remove the O-ring(s) from the Permeate port adapter.

Head Re-Building contd...

NOTE

It may be necessary to twist the two parts in opposite directions to break a seal between them.

A small screw driver or similar tool may be used to remove O-rings. However, do not damage the sealing surfaces in any way or leakage may result.

It is recommended that all seals be replaced each time the head is assembled.

** Following Steps 2-3 are applicable only for Steel backed Noryl head.*

Step 2 Remove Permeate Port locking ring

1. Remove the permeate port locking ring located on the external side of the securing plate using a locking ring removal tool.

Removing the Permeate Port Locking Ring

Step 3 Removing Securing plate

1. Separate the securing plate from the elliptical metal dish.

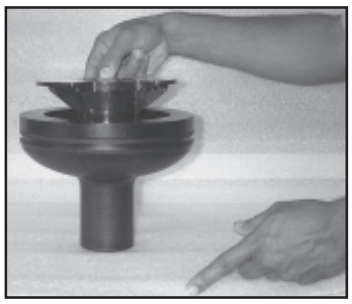

Removing the Securing Plate

** Following Steps 4-5 are applicable only for OCTA 80R15 / 30 / 45 / 60 Coded head.*

Step 4 Removing Screws from the head Spacer plate

1. Remove the Screw using allen key tool

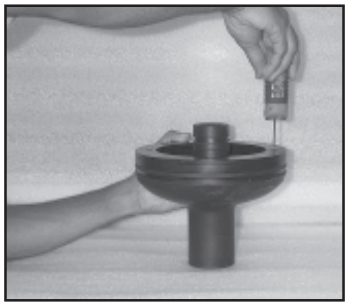

Removing the Screw

Step 5 Removing Spacer Plate from elliptical metal dish.

1. Separate the spacer plate from the Elliptical metal dish

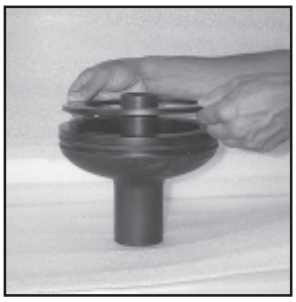

Removing the Spacer Plate

Step 6 Removing Elliptical metal dish

1. Separate the elliptical metal dish from the Universal Noryl head.

Removing the Elliptical Metal Dish

Head Re-Building contd...

Component cleaning and examination

Step 1 Wash components

1. Wash all components in fresh water.

2. Blow components dry with compressed air, if available. Otherwise wipe dry with a dry, lint-free cloth.

CAUTION

Read all guidelines in this section before making any decisions on component structure or corrosion problems and treatment.

This section is intended only to provide guidelines in dealing with corrosion or component damage. In combination with good industrial practice, these guidelines provide a basis for safe system operation.

Any condition not covered in this section should be referred to Pentair Water.

Corrosion in this context includes metal oxidation products and mineral deposits.

Step 2 Initial component inspection

1. Examine all components for any damage that could affect structural strength or sealing properties.

2. Replace any parts considered to be structurally unacceptable.

CAUTION

Feed and Concentrate ports and attachments to the shell must be carefully inspected to ensure that connections and sealing materials are sound and tight. Any questions or evidence of deterioration of these areas should be referred to Pentair Water engineers.

Other than head seals, adapter seals & PWT seals replacement, field repair should not be attempted by user maintenance personnel without first contacting the manufacturer for guidance.

The following example indicate when replacement is required.

A. Permeate port internal thread stripped or over-strained.

B. Elliptical metal dish dented or distorted (possibly from being dropped or hit).

C. Locking segment bent or damaged.

Any other details considered to be a potential problem should be referred to Pentair Water.

NOTE

If any component is cracked, softened or discoloured, it may indicate a chemical resistance problem. These components must be replaced. Alternate materials may be required in these applications. Contact Pentair Water for a solution.

Step 3 Evaluating corroded metal components.

This procedure applies to the following parts:

A. Elliptical metal dish
B. Locking segment

Head Re-Building contd...

1. Examine these components for corrosion. For any components not in “as-new” condition, proceed as follows:

   A Loosen any large deposits with small wire brush.

   B Place components in shallow container of soapy water and scrub entire surface with medium grade Scotchbrite™ until all corrosion is removed.

   C Rinse components clean with fresh water.

   D Blow components dry with compressed air, if available.

   E Re-examine components for damage that could affect structural strength or sealing properties. Any components not in “as-new” condition must be replaced.

   F Inspect components for any condition that might have promoted corrosion, (e.g. external damage, inappropriate material selection, etc.).

CAUTION

This procedure for evaluating corroded components is to be used on any corroded metal parts. If this fails to bring any component to “as-new” standards, the part must be replaced.

To re-assemble head

Step 1 Install head seals and adapter O-rings

Lubricating Head Seals & O-rings

1. Lubricate and install O-rings on the membrane adapter.

2. Lubricate and install the square cut seal in the head seal groove provided in the head.

NOTE

It is recommended that all seals be replaced each time the head is assembled. A seal replacement kit is available from Pentair Water.

Lubricate seals sparingly, using non-petroleum based lubricants, i.e. Parker Super O-Lube®, Glycerine, or suitable silicone based lubricants. (Silicone based lubricants, correctly used, will ease head assembly and disassembly). (Glycerine is a commercially available lubricant that will not foul membranes).

WARNING

Head must be carefully assembled following these instructions. Incorrect assembly can result in explosive head failure.

Step 2 Assemble Securing plate and dished metal head

1. Place the Elliptical metal dish on the smaller diameter bore of the permeate port of universal Noryl head.

2. Place the spacer plate on the elliptical metal dish, align the holes and fix the spacer plate by tightening the screws using an allen key tool. *(This step is applicable only for OCTA 80R15 / 30 / 45 / 60 Coded head)*

3. Press the securing plate in the elliptical metal dish. The permeate port locking groove should be exposed.

4. Using a plier place the locking ring in the Permeate port locking groove.

Preventive Maintenance

Corrosion prevention is essential for the maintenance of safe operating conditions and to ease membrane element servicing.

Attention to the points listed below will enhance long-term safe operation and will ease servicing.

For suggestions on cleaning corrosion deposits from the vessel inside surface, refer to the Closing Vessel section.

For suggestions on cleaning corrosion deposits from head components, refer to the Head Rebuilding section

PREVENTIVE CHECKLIST

- [ ] End closures. Inspect for components that may have deteriorated. Replace as needed.
- [ ] Keep external head assembly components as dry as possible.
- [ ] Do not tolerate leaks.

CAUTION

Any leakage indicates a potentially dangerous condition. Failure to eliminate leakage may void the warranty and could result in vessel failure.

Trouble Shooting

This section is intended only to provide guidelines for dealing with problems that might arise while working with CodeLine™ OCTA Series pressure vessels.

These guidelines are not in any way a replacement for the good industrial practice required to ensure safe operation. We recommend that only a qualified mechanic, experienced in servicing high pressure hydraulic systems, carry out the following tasks.

Preliminary Inspection

Inspect the vessel at each end for corrosion which may interfere with head assembly removal. If corrosion is evident, proceed as follows:

1. Loosen any deposits with a small wire brush and/or a medium grad piece of Scotchbrite™.

Loosening Deposits

CAUTION

Do not use a wire brush on Noryl components.

2. Flush away loosened deposits with clean water.

3. Proceed with instructions given in Opening Vessels section.

Difficulty in opening vessel

NOTE

Recommendations listed below are intended only as a guide. If the head assembly is still difficult to remove after all recommendations have been followed, call Pentair Water for technical assistance.

Head Assembly

1. Will not release from shell when pulling on securing plate with both hands.

   Using a head removal tool, fix the 1” NPT connection to the permeate end and tighten the nut till the head comes out.

   OR

   Thread a 1” ID pipe approximately 1 feet long into the Permeate port.

   Carefully rock the head assembly back and forth to release the seal.

   Once the head seal has been broken, complete removal as instructed in the Opening Vessel section.

NOTE

If the head assembly will not release from the shell after all recommendations have been followed, call Pentair Water for technical assistance.

HEAD

1. **Seal leaks.**

   A Carefully inspect the seal gland area in the shell and clean any contaminants from the gland.

   B Clean the seal area on the head and re-lubricate.

   C Install a new head seal that has been properly lubricated.

Trouble Shooting contd...

Sudden drop in Permeate quality

If a system is started and stopped frequently and no provision is made to raise the pressure slowly, movement of the membrane column may damage O-ring seals and reduce permeate quality.

If the quality of the permeate suddenly drops off, and poor membrane performance is not suspected, remove the heads per instructions in the Users Guide (See OPENING VESSEL section on page nos. 11-12). Inspect these O-ring seals carefully for breakage or other damage. If the seals have rolled out of the groove, or are damaged, this may indicate excessive movement is occurring during start-up and shutdown. To overcome this problem, the vessel should be shimmed to minimize this movement. Follow the procedure for shimming as given below:

SHIMMING

Shimming is accomplished by placing spacers between the adapter and the hub on the permeate port on the upstream end of the vessel. When done properly, shimming will prevent excessive movement of the membrane elements and the adapters, thus preventing potential damage of the O-ring seals. The spacers used for shimming are shaped like a plastic washer and are 0.20 inches thick.

The suggested procedure for shimming is as follows:

1 With the membrane properly loaded, install the adapter in the last element and place the thrust cone on the head for the downstream end of the vessel. (See Replacing Element section on page nos. 13-15).

2 Install the head in the downstream end of the vessel following Steps 1 through 4 of the section entitled Closing Vessel on page nos. 16-18.

3 Remove the product water tube seals from the upstream adapter and the head seal.

4 Push the straight end of the adapter into the permeate hub, just far enough so that it is held in by the adapter seal.

5 Line the adapter up with the product water tube on the first element and install the head fare enough into the vessel so that you can place a locking ring segment in the groove.

6 Carefully remove the head and observe the space between the hub of the adapter and the face of the permeate port. Determine the number of spacers necessary to fill this space.

7 Remove the adapter and place the product water tube seals. Insert the adapter in the product water tube of the first element.

8 Slide the number of spacers determined in Step 6, over the end of the adapter.

9 Now close the vessel according to the Vessel Closing section which begins on page no.16.

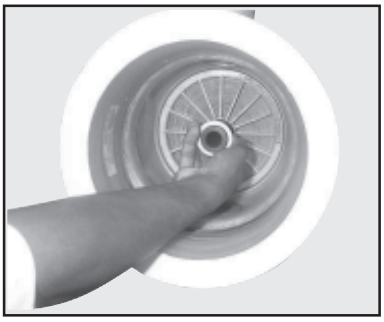

Sliding Spacer onto Adapter

Installation Guide

Introduction

The CodeLine™ OCTA Series fiberglass membrane housing is designed for continuous long term use as a housing for reverse osmosis, nano-filtration, ultra-filtration and micro-filtration membrane elements in typical water treatment systems at operating pressures of 150 PSI to 1200 PSI.

The CodeLine™ OCTA Series is designed to accommodate any make of 8-inch nominal diameter membrane element.

Improper assembly, misuse, rigid clamping, impact, scratches, abrasion or corrosion can result in mechanical failure, property damage and serious injury or death.

The information and guidelines incorporated in this User's Guide are intended only as supplement to good industrial practice. Full responsibility for correct operation and maintenance of vessel remains with the user.

This guide should be used in conjunction with engineering drawings.

When properly installed and maintained, the CodeLine™ OCTA Series vessels can be expected to provide safe operation over a long service life.

Should any information in this guide not agree with the system supplier's instructions, call Pentair Water for clarification.

Regardless of when and by whom your vessel may have been installed, there are a few quick checks you should make before use. Check that each vessel is:

- Mounted with compliant material (Polyurethane Saddle) between the fiberglass shell and any rigid frame.
- Free to expand under pressure – shell <u>not</u> clamped rigidly in place, <u>no</u> rigid piping connection to port fittings.
- <u>Not</u> used in any way to support other vessels / objects.

Handling, Receiving And Storage

Fiberglass reinforced plastic (FRP) Pressure vessels are extremely rugged and durable. They are designed for safe, long-term service when they are handled and installed properly. However, damage to the vessel shell or related components from improper handling or installation could result in malfunction or explosive head failure while in service. Therefore exercise the following precautions whenever handling vessel.

1. Never lift or move a vessel by placing anything inside it. The vessel is durable and ideally suited to its purpose, but careless handling can permanently damage it.
2. Be careful not to scratch the inside wall of the shell, especially in the sealing area inboard of locking segment groove near the end.
3. Do not drop vessel or allow it to hit hard on the ground or against other objects.
4. Do not apply undue stress to shell.
5. Before using a forklift to handle the vessel, pad the forks to lessen the chance of damaging the shell. Severe scratches or gouging of the vessel can result in failure of the vessel wall.

NOTE ON IMPACT DAMAGE

Exterior vessel damage can lead to early vessel failure. Damage received in shipment should be reported to the shipping company immediately upon receipt minor damage such as scratches that go no deeper than the paint may be acceptable. Call the Pentair Water customer service department for advice if in doubt.

STORAGE

Pentair Water recommends storing the vessel in the received packing or in a secure place. Vessel should not be stored in such a manner that they will roll over and get damaged.

Mounting Shell

NOTE

If mounting vessel for the first time, see "piping recommendations for CodeLine™ OCTA Series sideport vessel", page no.50.

This section is concerned with the mounting of OCTA 80R15 / 30 / 45 / 60 / 100 / 120 pressure vessels.

These guidelines must be integrated with any additional procedure required for your specific installation.

Installation Guidelines

1. Provide adequate room for servicing at both ends of vessel. Elements are installed from the upstream end (feed), pushed through towards the downstream end (concentrate) and, eventually, removed from the downstream end.

2. Follow all applicable Handling Guidelines (*page no.27*).

3. Position each vessel on its mounting frame such that it is centered between headers.

NOTE

It is important that each vessel be placed to minimize any strain on piping / tubing that connects a vessel to a header. Normally each vessel should be centered in the frame with the feed and concentrate ports positioned such that piping / tubing connections can be made easily, without undue strain at each end of the vessel.

4. Mount vessels on urethane saddles (provided with the vessel) positioned in line with pre-drilled frame holes for –1 through –3 vessels. Holes for the mounting straps should be drilled at approximate center span 'S'. For -4 and -8 vessels, holes for the mounting straps should be drilled at span 'S' from the middle of the vessel and a third saddle, without a strap, should be placed at mid span. These dimensions are shown on the corresponding engineering drawing.

WARNING

DO NOT MOUNT VESSEL RIGIDLY. RESTRICTED EXPANSION CAN RESULT IN DAMAGE TO THE VESSEL. SEE ELASTICITY AND MOUNTING REQUIREMENTS IN THE APPLICATION SECTION FOR FURTHER DETAILS.

Mounting Shell contd...

5. Place mounting straps over vessel with plastic strip against vessel.

6. Position screw through the frame mounting holes into strap nuts and run up to the frame finger tight.

7. Connect vessel feed piping (See Piping Connections on *page no.30*)

8. Using a wrench, tighten mounting bolts one additional full turn. This should result in 25-50 lbs-in. of torque.

CAUTION

To avoid damage to vessel shell DO NOT over-tighten mounting nuts.

NOTE

OCTA straps are designed to secure the vessels during operation. They are not designed to handle all loads that might occur during shipment. Appropriate vessel restraint should be employed considering such factors as the mode of shipment, distance to be traveled and design of the system. The vessels and frame should be blocked to prevent any differential movement which could be caused by the forces experienced during shipment.

Piping Connections

The following are suggested guidelines to ensure that the vessel is allowed to expand and is easily serviced:

1. Support the header and interconnecting piping in a manner that they are self-supporting.

2. Connecting piping alignment to feed, concentrate and permeate ports should not exceed 0.030 inch (0.762 mm) misalignment.

3. Piping connections to the vessel's feed / concentrate ports should be via flexible Victaulic couplings. (See page no. 50 for further details.)

Application Guide

Introduction

This Application Guide, together with the Installation Guide and the Operation and Maintenance Guide, outlines the general conditions for safe use of CodeLine™ OCTA Series pressure vessels. Because of the considerable risk inherent in high pressure vessels, it is the purchaser's responsibility to carefully evaluate each specified application to ensure that the CodeLine™ OCTA Series vessel selected is appropriate to that application.

Pentair Water will assist the purchaser in determining the suitability of the standard vessel for their specific operating conditions. For non-standard applications, alternate materials are available on special order. The final determination, however, including evaluation of the standard materials of construction for compatibility with the specific environment, is the responsibility of the purchaser.

Suitability For Intended Use

CodeLine™ OCTA Series membrane housings are designed for continuous long-term use as housings for reverse osmosis, nano-filtration, ultra-filtration and micro-filtration membrane elements. Models are available for 150, 300, 450, 600, 1000 & 1200 psi. Any make of eight-inch nominal diameter spiral wound element is easily accommodated.

In a high pressure system there is considerable potential for catastrophic failure, which could result in serious injury or loss of life. All decisions as to suitability for use must include full consideration of the various safety aspects involved. These include, but are not limited to:

Process fluid compatibility (e.g. chemical and temperature consideration).

External environmental factors (e.g. corrosive atmosphere, remote or special environmental where certain material might be undesirable, etc.).

Abnormal back pressure which might result in pressurizing permeate port above the rated pressure (alternate materials are available).

Capability of the user to maintain vessel properly.

Requirement for increased fire resistance in some circumstances.

Use of CodeLine™ OCTA Series pressure vessel for other than its intended application will void the warranty.

Elasticity And Mounting Requirements

Mounting design must allow for vessel expansion, both axially and radially. Although the expansion under pressure is slight, undue restriction can result in damage to the vessel and to other system components. Typically a seven-element vessel, for example, would expand approximately 0.20 inch (6 mm) in length and 0.015 inch (0.4 mm) in diameter. The following suggestions will help to ensure the vessel is allowed to expand and will ease servicing.

1. Mount the vessel on the urethane support pads furnished. Do not mount directly to any rigid structure.

2. Use the stainless steel straps furnished. Straps should be tightened sufficiently to hold the vessel on the urethane support pads, but not so tightly so as to restrict expansion. (A torque of 25-50 lbs-in. is sufficient.)

3. U-bolts should not be used for vessel mounting under any circumstances.

4. Provide flexible piping connection to permit de-coupling the header from the vessel. The recommended Permeate Port connection is a U-bend pipe with flexible connections at each end, or a flexible hose. Recommended Feed and Concentrate connections are via flexible Victaulic® coupling.

5. Do not hard plumb any piping connections to the vessel.

6. Support the header independently. Piping should be self-supporting or supported by the headers.

7. Include an expansion loop in the branch connection to allow for:
   A. Elastic growth under pressure.
   B. Thermal growth in vessel length.

8. The total weight of branch connection and fittings supported by the vessel should not exceed 8 lbs for either the Feed / Concentrate ports or the Permeate port for CodeLine™ OCTA series vessels.

The above suggestions are intended to help prevent damage in typical applications. Unusual or special applications may involve other considerations to be determined by the system designer.

Corrosion

Considerations relating to corrosion are an important factor in vessel application. Corrosion can result in catastrophic failure and / or cause difficulty in removing head components from the shell. Correct component material selection is essential for safe long-term use. Although the process fluid is the main consideration, external environment conditions should also be taken into account.

All reasonable precautions should be taken to protect head assemblies from external wetting, particularly in corrosive atmospheres (e.g. salt-water areas or acid atmosphere such as near lead acid battery arrays, etc.). Leaks from vessel or nearby components, which allow head parts to be routinely wetted, should not be tolerated.

The following typical list of CodeLine™ OCTA Series, pressure vessel components indicating the standard material of construction of each part is listed in the Engineering drawings. An evaluation of the possibility of corrosion damage to metal head interlock components is of critical importance. Alternate materials are available upon request.

Safety

CAUTION

Pressure vessel may cause loss of life, severe bodily harm or property damage if not correctly installed, operated and maintained.

Safety in service of fiberglass vessel depends on proper application, installation, operation and maintenance. This section is intended to provide guidance towards safe system design. The safety information given in the installation and operation and maintenance section should also be studied and used appropriately in conjunction with the precautions listed below.

Design Considerations for Safety

Fluid compatibly

The materials of construction selected must be compatible with the process fluid and with proposed preserving and cleaning fluids. Standard materials are listed on the engineering drawings. In case where the standard materials are unacceptable, suitable alternative may be available.

Pressure and temperature design limits

Operation of a vessel outside its design limits will void the warranty and would result in vessel fatigue with possible eventual catastrophic failure. Although each CodeLine™ OCTA vessel is tested as per ASME/CE specifications, long term operation above the designed pressure must be prevented. For permeate port pressure rating and maximum operating temperature, refer respective sales drawings.

Over pressure protection

It is essential that over pressure protection be provided such that the pressure to which any vessel is subjected cannot exceed 105% of design pressure.

Mounting

The pressure vessel should not be used as a support. Piping manifolds and other fittings should be supported by properly designed system framework. Operating personnel should be discouraged from applying from undue force to any fittings connected directly to a pressure vessel.

Accessibility

Pressure vessel should be positioned within the system such that elements can be inserted at the upstream end and removed from the downstream end (i.e. elements are installed and removed in the direction of feed flow).

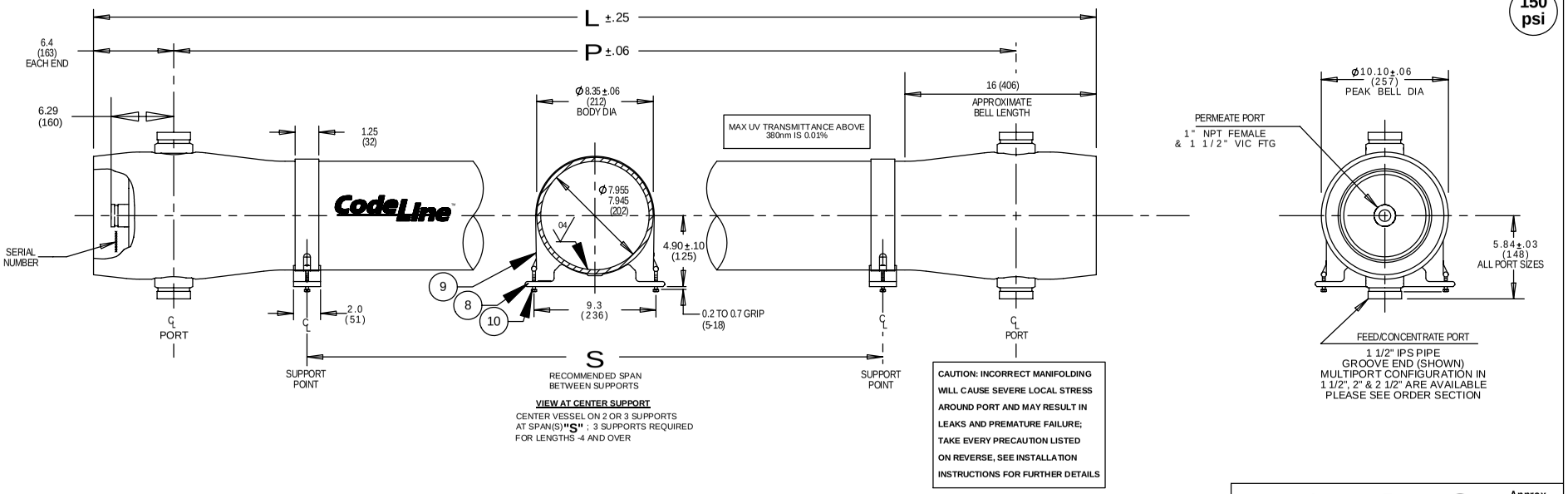

Dwg. Ref.	Qty. Per	Part Number		Description	Materials/Remarks	
				SHELL		
1	1	ORDER SECTION		Shell	Filament wound epoxy/glass composite-Head locking grooves integrally wound in-place.	
2	A/R			F/C Port	CF3M	
3	A/R			F/C Port Seal	EPDM	
				HEAD		
		CODE	NON-CODE		ASME CODE	NON-ASME CODE
4	2	52571	52570	Head Assy	Noryl Backed with Steel	Noryl
5	2	52574	52574	Head Seal	EPDM - Square Cut	
6	2	52245	52245	Adapter ,seal	EPDM - O-ring	
				HEAD INTERLOCK		
7	2		52510	Locking Ring	Steel SA 105,Nickel Plated.	
				VESSEL SUPPORT		
8	* 3		52169	Universal Saddle	Engineering Thermoplastic	
9	* 3		45042	Strap Assy	304 Stainless Steel - PVC cushion	
10	6		46265	Strap Screw	5/16-18 UNC, 18-8 Stainless Steel	
				ELEMENT INTERFACE		
11	2		A/R	Adapter	Engineering Thermoplastic	
12	A/R		A/R	PWT SEAL	EPDM	
13	1		52609	Thrust Cone	Engineering Thermoplastic	

* 2 each furnished with length code 1, 2 & 3

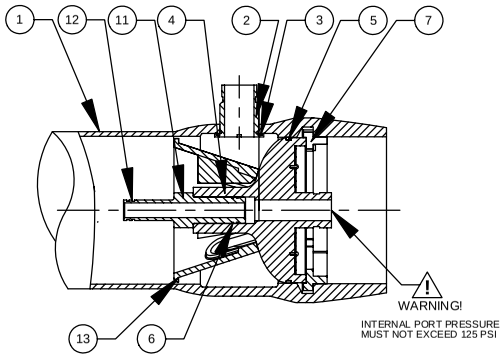

SECTION THROUGH NON-CODE END

ITEM 13 DOWNSTREAM ONLY

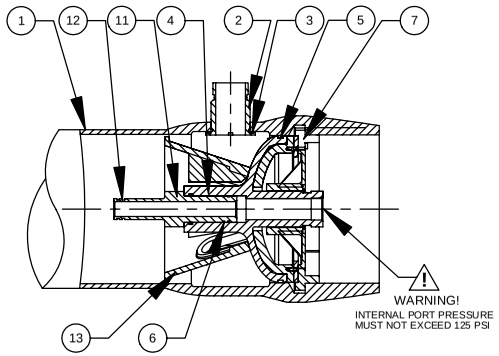

SECTION THROUGH CODE END

ITEM 13 DOWNSTREAM ONLY

NOTES

- MAX. ANGULAR VARIATION BETWEEN ANY PORTS ± 0.5°
- SHELL EXTERIOR COATED WITH WHITE, HIGH GLOSS POLYURETHANE PAINT
- DIMENSION IN INCHES (MM APPROX.)
- NOT TO BE USED FOR CONSTRUCTION UNLESS CERTIFIED

Shell Length Code	L L.O.A. IN (MM)	P Span IN (MM)	S Span IN (MM)	Approx. Weight LB (KG)
1	60 (1524)	47.0 (1194)	28X 1 (711)	82 (37)
2	100 (2540)	87.0 (2210)	56 X 1 (1422)	99 (45)
3	140 (3556)	127.0 (3226)	80 X 1 (2032)	117 (53)
4	180 (4572)	167.0 (4242)	64 X 2 (1626)	135 (61)
5	220 (5588)	207.0 (5258)	78 X 2 (1981)	152 (69)
6	260 (6604)	247.0 (6274)	92 X 2 (2337)	170 (77)
7	300 (7620)	287.0 (7290)	106 X 2 (2692)	187 (85)

CodeLine™ Pentair Water

DRAWN ARBP	CODELINE OCTA 80R15 MEMBRANE HOUSING				
CHECKED SM					
DATE 14JUL04	ECN 634	SHEET 1 OF 2	SIZE A3	NUMBER 99119	REV C

RATING:

DESIGN PRESSURE……....150 PSIG at 190°F
(1.0 MPa at 88°C)
MIN. OPERATING TEMP……..…....……..20°F
(-7°C)
FACTORY TEST PRESSURE…… CE / ASME
225 PSIG / 195 PSIG
(1.6 MPa) (1.3 MPa)
QUALIFICATION PRESSURE…… 900 PSI
(6.2 MPa)

INTENDED USE:

The CodeLine OCTA 80R15 Fiberglass RO Pressure Vessel is designed for continuous, long term use as a housing for reverse osmosis membrane elements to desalt typical brackish waters at pressures up to 150 psi. Any make of eight-inch nominal diameter spiral-wound element is easily accommodated; the appropriate interfacing hardware for the element specified is furnished with the vessel.

The CodeLine OCTA 80R15 with Steel Backed Noryl Head is designed in accordance with the engineering standards of the Boiler and Pressure Vessel Code of the American Society of Mechanical Engineers (ASME) Code. At small additional cost vessels can be inspected during construction by an ASME Authorized Inspector and ASME Code stamped.

In case of membrane housing with Noryl Head, only the shell is ASME compliant.

The CodeLine OCTA 80R15 must be installed, operated and maintained in accordance with the listed precautions and good industrial practice to assure safe operation over a long service life.

The high performance Filament wound FRP shell must be allowed to expand under pressure; undue restraint at support points or piping connections can cause leaks to develop in the shell. This side-ported vessel requires special precautions in mounting and connection to piping so that the vessel will not be subjected to excessive stress due to bending moments acting at the side openings in the fiberglass shell. The end closure, incorporating close fitting, interlocking metal components, must be kept dry and free of corrosion; deterioration can lead to catastrophic mechanical failure of the head.

Pentair Water will assist the purchaser in determining the suitability of this standard vessel for their specific operating conditions. The final determination however, including evaluation of the standard material of construction for compatibility with the specific corrosive environment, shall be the responsibility of the purchaser. Alternate materials with enhanced corrosion resistance are available on special order.

Specifications are subject to change without notice.

PRECAUTIONS:

DO…read, understand and follow all instructions; failure to take every precaution will void warranty and may result in vessel failure
DO…mount the shell on horizontal members at span "S" using compliant vessel supports furnished; tighten hold down straps just snug
DO…align and center side ports with the manifold header. Correct, causes of misalignment in a row of vessels connected to the same header
DO…use flexible type grooved-end pipe couplings, Victaulic® Style 77 or equal, at side ports; allow full, 0.125 inch gap between port and piping, and position piping to maximize flexibility of connection.
DO…provide flexibility in, and support for piping manifolds so that vessel can grow in length under pressure without undue restraint; provide additional flexible joints in large pipes leading to manifold header.
DO…provide overpressure protection for vessel set at not more than 105% of design pressure
DO…inspect end closures regularly; replace components that have deteriorated and correct causes of corrosion

DO NOT…work on any component until first verifying that pressure is relieved from vessel
DO NOT…make rigid piping connections to ports or clamp vessel in any way that resists growth of fiberglass shell under pressure;
***ΔDIA = 0.015 in. (0.4mm) and
***ΔL = 0.2 in. (6mm) for a length code –7 vessel
DO NOT… hang piping manifolds from ports or use vessel in any way to support other components
DO NOT…tighten Permeate Port connection more than one turn past hand tight
DO NOT… operate vessel without connecting both Permeate Ports internally to complete set of elements or otherwise plug ports internally so that external piping connection is not subjected to feed pressure
DO NOT…install Spacer on downstream end of vessel
DO NOT…operate vessel without Thrust Cone installed downstream
DO NOT…pressurize vessel until double-checking to verify that the Locking Ring is in place and fully seated.
DO NOT…operate vessel at pressure and temperature in excess of its rating.
DO NOT…operate vessel with permeate pressure in excess of 125 psi at 190°F (0.86 MPa at 88°C).
DO NOT…tolerate leaks or allow end closures to be routinely wetted in any way
DO NOT…operate outside the pH range of 3-10.

ORDERING:
Using the chart below, please check the features you require and fax them with your purchase order to our customer service department for further processing.
For optional materials and / or feature not listed below, please consult the factory for pricing and availability

VESSEL LENGTH CODE – please check one

MODEL OCTA 80R15 ☐ -1 ☐ -2 ☐ -3 ☐ -4 ☐ -5 ☐ -6 ☐ -7

MEMBRANE BRAND AND MODEL – please check one and fill in information

- ❑ Please supply adapters for the following membrane brand and specific model
  Brand_____ Model_____
- ❑ Membrane brand and model information is not currently available, but will be supplied to Pentair Water on or before the following date. ___ / ___ / ___

CERTIFICATION REQUIRED

- ❑ ASME Stamped and National Board Registered (Please consult factory for pricing)
- ❑ CE Marked
- ❑ NSF / ANSI-61 Certified
- ❑ Standard, Certified by Pentair water .

MATERIAL AND PORT CONFIGURATIONS OPTIONS – please check one
- ❑ Standard: all materials and port configurations as per drawing 99119 on the previous page
  NOTE: The options listed below will increase the vessel price. Call factory for pricing details.
- ❑ Option: Customer specified port configuration. Using the chart below, please indicate the customized options you require for each end of the pressure vessel (multiple options are available at each end).
  (Please consult factory as these options will affect pricing and vessel lead time)

PORT SIZE CODE	
D	1½" GROOVED END
E	2" GROOVED END
F	2½" GROOVED END

FEED PORT CONFIGURATION
- ❑ Standard – 1½" IPS pipe, grooved ends, with ports in-line
- ❑ Optional – Multi-Ports™
  Using the instructions in Order Specification Sheet #99007 please fill out your feed port configuration in the space below. List port location first, followed by port size for each choice.
- ❑ 2" Triclover, Sanitary. (For Material and Head assembly details refer Dwg. No. 99125)

Serial number end ☐ ☐ ☐ ☐ ☐ ☐ ☐ ☐
Opposite end ☐ ☐ ☐ ☐ ☐ ☐ ☐ ☐

PERMEATE PORT CONFIGURATION:
- ❑ Standard
- ❑ 1" Triclover.
  (For Material and Head assembly details refer Dwg. No. 99125)

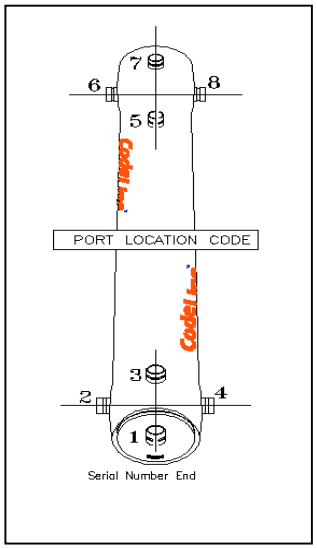

For complete information on proper use of the vessel
Please refer to the OCTA 80R Series USER'S GUIDE

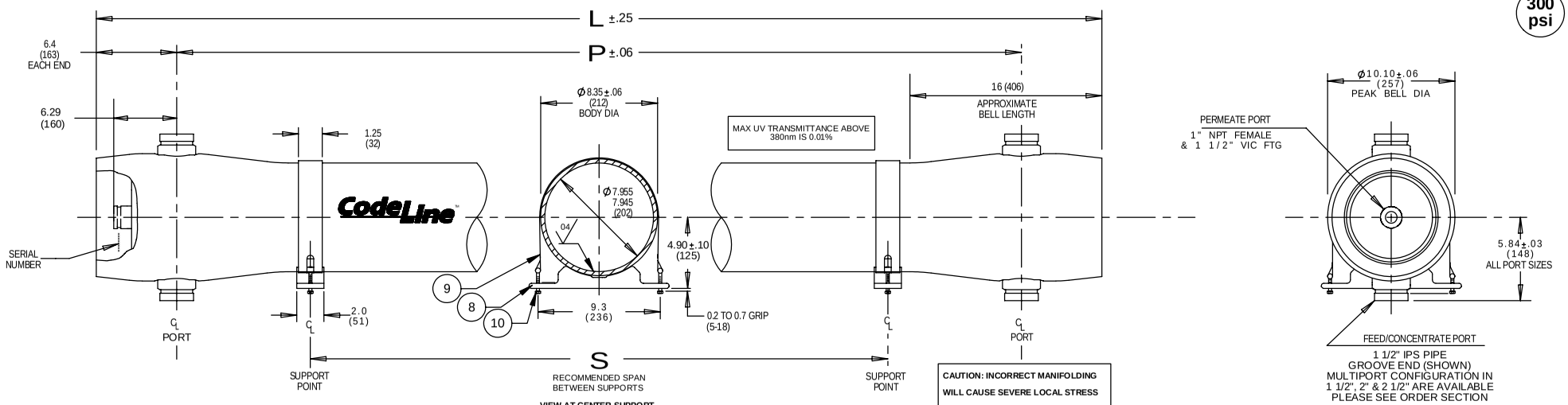

Dwg. Ref.	Qty. Per	Part Number	Description	Materials/Remarks
			SHELL	
1	1	ORDER SECTION	Shell	Filament wound epoxy/glass composite-Head locking grooves integrally wound in-place.
2	A/R		F/C Port	CF3M
3	A/R		F/C Port Seal	EPDM
			HEAD	
		CODE / NON-CODE		ASME CODE / NON-ASME CODE
4	2	52571 / 52570	Head Assy	Noryl backed with Steel / Noryl
5	2	52574 / 52574	Head Seal	EPDM - Square Cut
6	2	52245 / 52245	Adapter ,seal	EPDM - O-ring
			HEAD INTERLOCK	
7	2	52510	Locking Ring	Steel SA 105, Nickel Plated.
			VESSEL SUPPORT	
8	* 3	52169	Universal Saddle	Engineering Thermoplastic
9	* 3	45042	Strap Assy	304 Stainless Steel - PVC cushion
10	6	46265	Strap Screw	5/16-18 UNC, 18-8 Stainless Steel
			ELEMENT INTERFACE	
11	2	A/R	Adapter	Engineering Thermoplastic
12	A/R	A/R	PWT SEAL	EPDM
13	1	52609	Thrust Cone	Engineering Thermoplastic

* 2 each furnished with length code 1, 2 & 3

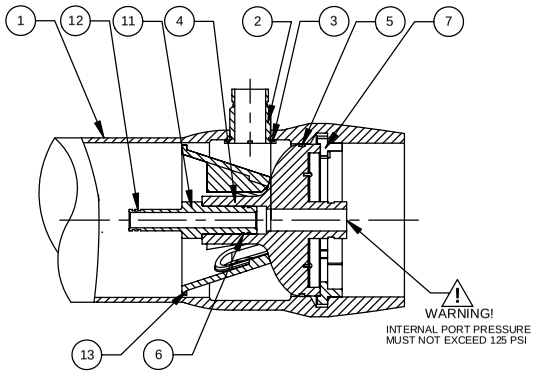

SECTION THROUGH NON-CODE END
ITEM 13 DOWNSTREAM ONLY

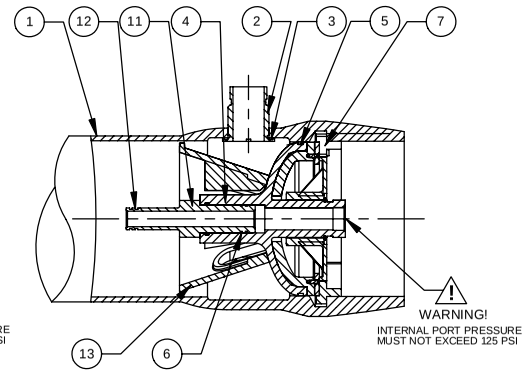

SECTION THROUGH CODE END
ITEM 13 DOWNSTREAM ONLY

NOTES

- MAX. ANGULAR VARIATION BETWEEN ANY PORTS ± 0.5°
- SHELL EXTERIOR COATED WITH WHITE, HIGH GLOSS POLYURETHANE PAINT
- DIMENSION IN INCHES (MM APPROX.)
- NOT TO BE USED FOR CONSTRUCTION UNLESS CERTIFIED

Shell Length Code	L L.O.A. IN (MM)	P Span IN (MM)	S Span IN (MM)	Approx. Weight LB (KG)
1	60 (1524)	47.0 (1194)	28X 1 (711)	82 (37)
2	100 (2540)	87.0 (2210)	56 X 1 (1422)	99 (45)
3	140 (3556)	127.0 (3226)	80 X 1 (2032)	117 (53)
4	180 (4572)	167.0 (4242)	64 X 2 (1626)	135 (61)
5	220 (5588)	207.0 (5258)	78 X 2 (1981)	152 (69)
6	260 (6604)	247.0 (6274)	92 X 2 (2337)	170 (77)
7	300 (7620)	287.0 (7290)	106 X 2 (2692)	187 (85)

CodeLine™
Pentair Water

DRAWN ARBP	CODELINE OCTA 80R30 MEMBRANE HOUSING				
CHECKED SM					
DATE 14 JUL 04	ECN 634	SHEET 1 OF 2	SIZE A3	NUMBER 99120	REV C

RATING:

DESIGN PRESSURE……..300 PSIG at 190°F (2.1 MPa at 88°C)
MIN. OPERATING TEMP……..……20°F (-7°C)
FACTORY TEST PRESSURE…. CE / ASME
450 PSIG / 390 PSIG
(3.1 MPa) (2.7 MPa)
QUALIFICATION PRESSURE ……....1800 PSI (12.4 MPa)

INTENDED USE:

The CodeLine OCTA 80R30 Fiberglass RO Pressure Vessel is designed for continuous, long term use as a housing for reverse osmosis membrane elements to desalt typical brackish waters at pressures up to 300 psi. Any make of eight-inch nominal diameter spiral-wound element is easily accommodated; the appropriate interfacing hardware for the element specified is furnished with the vessel.

The CodeLine OCTA 80R30 with Steel Backed Noryl Head is designed in accordance with the engineering standards of the Boiler and Pressure Vessel Code of the American Society of Mechanical Engineers (ASME) Code. At small additional cost vessels can be inspected during construction by an ASME Authorized Inspector and ASME Code stamped.

In case of membrane housing with Noryl Head, only the shell is ASME compliant.

The CodeLine OCTA 80R30 must be installed, operated and maintained in accordance with the listed precautions and good industrial practice to assure safe operation over a long service life.

The high performance Filament wound FRP shell must be allowed to expand under pressure; undue restraint at support points or piping connections can cause leaks to develop in the shell. This side-ported vessel requires special precautions in mounting and connection to piping so that the vessel will not be subjected to excessive stress due to bending moments acting at the side openings in the fiberglass shell. The end closure, incorporating close fitting, interlocking metal components, must be kept dry and free of corrosion; deterioration can lead to catastrophic mechanical failure of the head.

Pentair Water will assist the purchaser in determining the suitability of this standard vessel for their specific operating conditions. The final determination however, including evaluation of the standard material of construction for compatibility with the specific corrosive environment, shall be the responsibility of the purchaser. Alternate materials with enhanced corrosion resistance are available on special order.

Specifications are subject to change without notice.

PRECAUTIONS:

DO…read, understand and follow all instructions; failure to take every precaution will void warranty and may result in vessel failure
DO…mount the shell on horizontal members at span "S" using compliant vessel supports furnished; tighten hold down straps just snug
DO…align and center side ports with the manifold header. Correct, causes of misalignment in a row of vessels connected to the same header
DO…use flexible type grooved-end pipe couplings, Victaulic® Style 77 or equal, at side ports; allow full, 0.125 inch gap between port and piping, and position piping to maximize flexibility of connection.
DO…provide flexibility in, and support for piping manifolds so that vessel can grow in length under pressure without undue restraint; provide additional flexible joints in large pipes leading to manifold header.
DO…provide overpressure protection for vessel set at not more than 105% of design pressure
DO…inspect end closures regularly; replace components that have deteriorated and correct causes of corrosion

DO NOT…work on any component until first verifying that pressure is relieved from vessel
DO NOT…make rigid piping connections to ports or clamp vessel in any way that resists growth of fiberglass shell under pressure;
***ΔDIA = 0.015 in. (0.4mm) and
***ΔL = 0.2 in. (6mm) for a length code –7 vessel
DO NOT… hang piping manifolds from ports or use vessel in any way to support other components
DO NOT…tighten Permeate Port connection more than one turn past hand tight
DO NOT… operate vessel without connecting both Permeate Ports internally to complete set of elements or otherwise plug ports internally so that external piping connection is not subjected to feed pressure
DO NOT…install Spacer on downstream end of vessel
DO NOT…operate vessel without Thrust Cone installed downstream
DO NOT…pressurize vessel until double-checking to verify that the Locking Ring is in place and fully seated.
DO NOT…operate vessel at pressure and temperature in excess of its rating.
DO NOT…operate vessel with permeate pressure in excess of 125 psi at 190°F (0.86 Mpa at 88°C).
DO NOT…tolerate leaks or allow end closures to be routinely wetted in any way
DO NOT…operate outside the pH range 3-10.

ORDERING:

Using the chart below, please check the features you require and fax them with your purchase order to our customer service department for further processing.
For optional materials and / or feature not listed below, please consult the factory for pricing and availability

VESSEL LENGTH CODE – please check one

MODEL OCTA 80R30 ☐ -1 ☐ -2 ☐ -3 ☐ -4 ☐ -5 ☐ -6 ☐ -7

MEMBRANE BRAND AND MODEL – please check one and fill in information

- ❑ Please supply adapters for the following membrane brand and specific model
  Brand_____ Model_____
- ❑ Membrane brand and model information is not currently available, but will be supplied to Pentair Water on or before the following date. ___ / ___ / ___

CERTIFICATION REQUIRED

- ❑ ASME Stamped and National Board Registered (Please consult factory for pricing)
- ❑ CE Marked
- ❑ NSF / ANSI-61 Certified
- ❑ Standard, Certified by Pentair water.

MATERIAL AND PORT CONFIGURATIONS OPTIONS – please check one

- ❑ Standard: all materials and port configurations as per drawing 99120 on the previous page
  NOTE: The options listed below will increase the vessel price. Call factory for pricing details.
- ❑ Option: Customer specified port configuration. Using the chart below, please indicate the customized options you require for each end of the pressure vessel (multiple options are available at each end).
  (Please consult factory as these options will affect pricing and vessel lead time)

PORT SIZE CODE	
D	1½" GROOVED END
E	2" GROOVED END
F	2½" GROOVED END

FEED PORT CONFIGURATION

- ❑ Standard – 1½" IPS pipe, grooved ends, with ports in-line
- ❑ Optional – Multi-Ports™
  Using the instructions in Order Specification Sheet #99007 please fill out your feed port configuration in the space below. List port location first, followed by port size for each choice.
- ❑ 2" Triclover, Sanitary. (For Material and Head assembly details refer Dwg. No. 99125)

Serial number end ☐ ☐ ☐ ☐ ☐ ☐ ☐ ☐
Opposite end ☐ ☐ ☐ ☐ ☐ ☐ ☐ ☐

PERMEATE PORT CONFIGURATION:

- ❑ Standard
- ❑ 1" Triclover.
  (For Material and Head assembly details refer Dwg. No. 99125)

For complete information on proper use of the vessel
Please refer to the OCTA 80R Series USER'S GUIDE

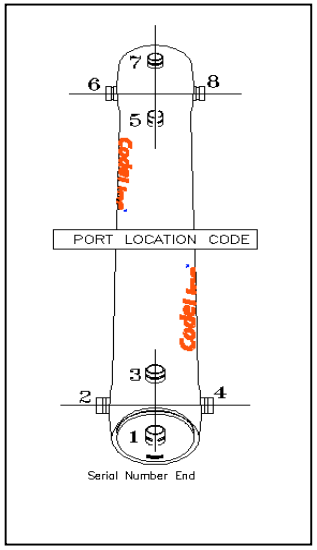

450 psi

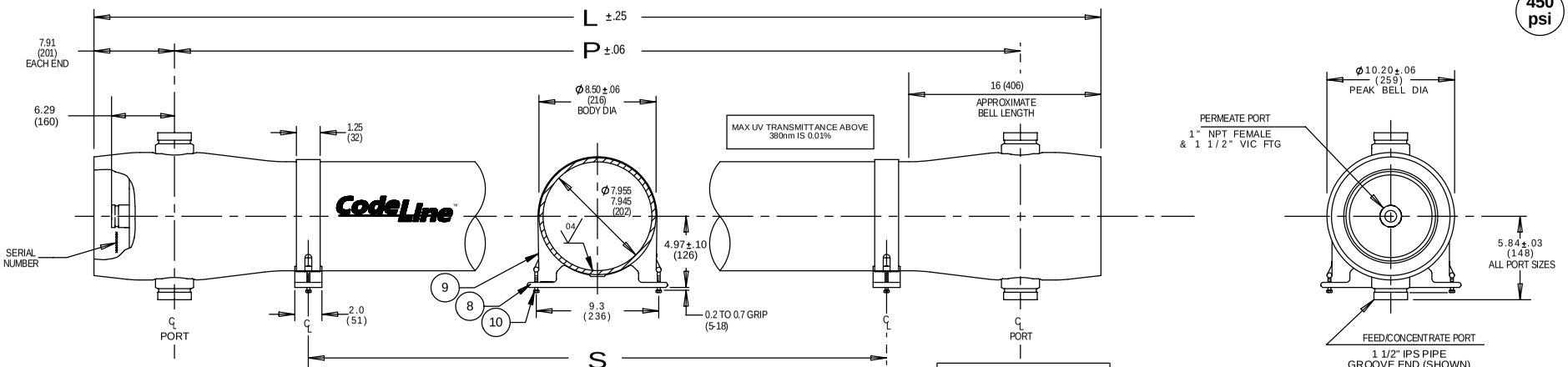

VIEW AT CENTER SUPPORT

CENTER VESSEL ON 2 OR 3 SUPPORTS AT SPAN(S) **"S"** ; 3 SUPPORTS REQUIRED FOR LENGTHS -4 AND OVER

CAUTION: INCORRECT MANIFOLDING WILL CAUSE SEVERE LOCAL STRESS AROUND PORT AND MAY RESULT IN LEAKS AND PREMATURE FAILURE; TAKE EVERY PRECAUTION LISTED ON REVERSE, SEE INSTALLATION INSTRUCTIONS FOR FURTHER DETAILS

Dwg. Ref.	Qty. Per	Part Number		Description	Materials/Remarks	
				SHELL		
1	1	ORDER SECTION		Shell	Filament wound epoxy/glass composite-Head locking grooves integrally wound in-place.	
2	A/R			F/C Port	CF3M	
3	A/R			F/C Port Seal	EPDM	
				HEAD		
		CODE	NON-CODE		ASME CODE	NON-ASME CODE
4	2	52571	52570	Head Assy	Noryl backed with Steel	Noryl
5	2	52574	52574	Head Seal	EPDM - Square Cut	
6	2	52245	52245	Adapter ,seal	EPDM - O-ring	
				HEAD INTERLOCK		
7	2	52510		Locking Ring	Steel SA 105, Nickel Plated.	
				VESSEL SUPPORT		
8	* 3	52169		Universal Saddle	Engineering Thermoplastic	
9	* 3	45042		Strap Assy	304 Stainless Steel - PVC cushion	
10	6	46265		Strap Screw	5/16-18 UNC, 18-8 Stainless Steel	
				ELEMENT INTERFACE		
11	2	A/R		Adapter	Engineering Thermoplastic	
12	A/R	A/R		PWT SEAL	EPDM	
13	1	52609		Thrust Cone	Engineering Thermoplastic	

* 2 each furnished with length code 1, 2 & 3

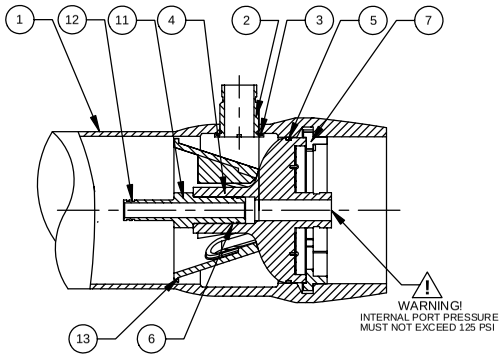

SECTION THROUGH NON-CODE END

ITEM 13 DOWNSTREAM ONLY

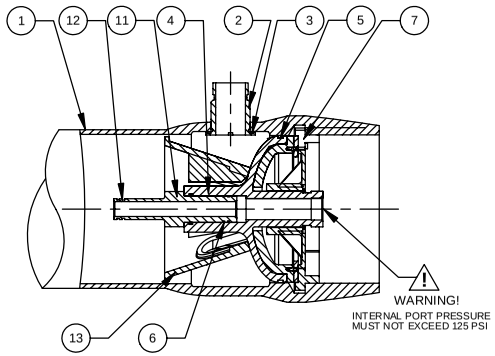

SECTION THROUGH CODE END

ITEM 13 DOWNSTREAM ONLY

NOTES

- MAX. ANGULAR VARIATION BETWEEN ANY PORTS ± 0.5°
- SHELL EXTERIOR COATED WITH WHITE, HIGH GLOSS POLYURETHANE PAINT
- DIMENSION IN INCHES (MM APPROX.)
- NOT TO BE USED FOR CONSTRUCTION UNLESS CERTIFIED

Shell Length Code	L L.O.A. IN (MM)	P Span IN (MM)	S Span IN (MM)	Approx. Weight LB (KG)
1	63 (1600)	47.0 (1194)	28X 1 (711)	104 (47)
2	103 (2616)	87.0 (2210)	56 X 1 (1422)	126 (57)
3	143 (3632)	127.0 (3226)	80 X 1 (2032)	148 (67)
4	183 (4648)	167.0 (4242)	64 X 2 (1626)	170 (77)
5	223 (5664)	207.0 (5258)	78 X 2 (1981)	192 (87)
6	263 (6680)	247.0 (6274)	92 X 2 (2337)	214 (97)
7	303 (7696)	287.0 (7290)	106 X 2 (2692)	236 (107)

CodeLine™ Pentair Water

DRAWN ARBP	CODELINE OCTA 80R45 MEMBRANE HOUSING				
CHECKED SM					
DATE 28 SEPT 04	ECN 634	SHEET 1 OF 2	SIZE A3	NUMBER 99121	REV D

RATING:

DESIGN PRESSURE……450 PSIG at 190°F
(3.1 MPa at 88°C)
MIN. OPERATING TEMP……..……..20°F
(-7°C)
FACTORY TEST PRESSURE…. CE / ASME
675 PSIG / 585 PSIG
(4.7 MPa) (4.03 MPa)
QUALIFICATION PRESSURE……..2700 PSI
(18.62 MPa)

INTENDED USE:

The CodeLine OCTA 80R45 Fiberglass RO Pressure Vessel is designed for continuous, long term use as a housing for reverse osmosis membrane elements to desalt typical brackish waters at pressures up to 450 psi. Any make of eight-inch nominal diameter spiral-wound element is easily accommodated; the appropriate interfacing hardware for the element specified is furnished with the vessel.

The CodeLine OCTA 80R45 with Steel Backed Noryl Head is designed in accordance with the engineering standards of the Boiler and Pressure Vessel Code of the American Society of Mechanical Engineers (ASME) Code. At small additional cost vessels can be inspected during construction by an ASME Authorized Inspector and ASME Code stamped.

In case of membrane housing with Noryl Head, only the shell is ASME compliant.

The CodeLine OCTA 80R45 must be installed, operated and maintained in accordance with the listed precautions and good industrial practice to assure safe operation over a long service life.

The high performance Filament wound FRP shell must be allowed to expand under pressure; undue restraint at support points or piping connections can cause leaks to develop in the shell. This side-ported vessel requires special precautions in mounting and connection to piping so that the vessel will not be subjected to excessive stress due to bending moments acting at the side openings in the fiberglass shell. The end closure, incorporating close fitting, interlocking metal components, must be kept dry and free of corrosion; deterioration can lead to catastrophic mechanical failure of the head.

Pentair Water will assist the purchaser in determining the suitability of this standard vessel for their specific operating conditions. The final determination however, including evaluation of the standard material of construction for compatibility with the specific corrosive environment, shall be the responsibility of the purchaser. Alternate materials with enhanced corrosion resistance are available on special order.

Specifications are subject to change without notice.

PRECAUTIONS:

DO…read, understand and follow all instructions; failure to take every precaution will void warranty and may result in vessel failure
DO…mount the shell on horizontal members at span "S" using compliant vessel supports furnished; tighten hold down straps just snug
DO…align and center side ports with the manifold header. Correct, causes of misalignment in a row of vessels connected to the same header
DO…use flexible type grooved-end pipe couplings, Victaulic® Style 77 or equal, at side ports; allow full, 0.125 inch gap between port and piping, and position piping to maximize flexibility of connection.
DO…provide flexibility in, and support for piping manifolds so that vessel can grow in length under pressure without undue restraint; provide additional flexible joints in large pipes leading to manifold header.
DO…provide overpressure protection for vessel set at not more than 105% of design pressure
DO…inspect end closures regularly; replace components that have deteriorated and correct causes of corrosion

DO NOT…work on any component until first verifying that pressure is relieved from vessel
DO NOT…make rigid piping connections to ports or clamp vessel in any way that resists growth of fiberglass shell under pressure;
***ΔDIA = 0.015 in. (0.4mm) and
***ΔL = 0.2 in. (6mm) for a length code –7 vessel
DO NOT… hang piping manifolds from ports or use vessel in any way to support other components
DO NOT…tighten Permeate Port connection more than one turn past hand tight
DO NOT… operate vessel without connecting both Permeate Ports internally to complete set of elements or otherwise plug ports internally so that external piping connection is not subjected to feed pressure
DO NOT…install Spacer on downstream end of vessel
DO NOT…operate vessel without Thrust Cone installed downstream
DO NOT…pressurize vessel until double-checking to verify that the Locking Ring is in place and fully seated.
DO NOT…operate vessel at pressure and temperature in excess of its rating.
DO NOT…operate vessel with permeate pressure in excess of 125 psi at 190°F (0.86 Mpa at 88^{0}C).
DO NOT…tolerate leaks or allow end closures to be routinely wetted in any way
DO NOT…operate outside the pH range 3-10.

ORDERING:
Using the chart below, please check the features you require and fax them with your purchase order to our customer service department for further processing.
For optional materials and / or feature not listed below, please consult the factory for pricing and availability

VESSEL LENGTH CODE – please check one

MODEL OCTA 80R45 ☐ -1 ☐ -2 ☐ -3 ☐ -4 ☐ -5 ☐ -6 ☐ -7

MEMBRANE BRAND AND MODEL – please check one and fill in information

- ❑ Please supply adapters for the following membrane brand and specific model
  Brand_____ Model_____
- ❑ Membrane brand and model information is not currently available, but will be supplied to Pentair Water on or before the following date. ___ / ___ / ___

CERTIFICATION REQUIRED

- ❑ ASME Stamped and National Board Registered (Please consult factory for pricing)
- ❑ CE Marked
- ❑ NSF / ANSI-61 Certified
- ❑ Standard, Certified by Pentair water .

MATERIAL AND PORT CONFIGURATIONS OPTIONS – please check one
- ❑ Standard: all materials and port configurations as per drawing 99121 on the previous page
  NOTE: The options listed below will increase the vessel price. Call factory for pricing details.
- ❑ Option: Customer specified port configuration. Using the chart below, please indicate the customized options you require for each end of the pressure vessel (multiple options are available at each end).
  (Please consult factory as these options will affect pricing and vessel lead time)

PORT SIZE CODE	
D	1½" GROOVED END
E	2" GROOVED END
F	2½" GROOVED END

FEED PORT CONFIGURATION
- ❑ Standard – 1½" IPS pipe, grooved ends, with ports in-line
- ❑ Optional – Multi-Ports™
  Using the instructions in Order Specification Sheet #99007 please fill out your feed port configuration in the space below. List port location first, followed by port size for each choice.
- ❑ 2" Triclover, Sanitary. (For Material and Head assembly details refer Dwg. No. 99125)

Serial number end ☐ ☐ ☐ ☐ ☐ ☐ ☐ ☐
Opposite end ☐ ☐ ☐ ☐ ☐ ☐ ☐ ☐

PERMEATE PORT CONFIGURATION:
- ❑ Standard
- ❑ 1" Triclover.
  (For Material and Head assembly details refer Dwg. No. 99125)

For complete information on proper use of the vessel
Please refer to the OCTA 80R Series USER'S GUIDE

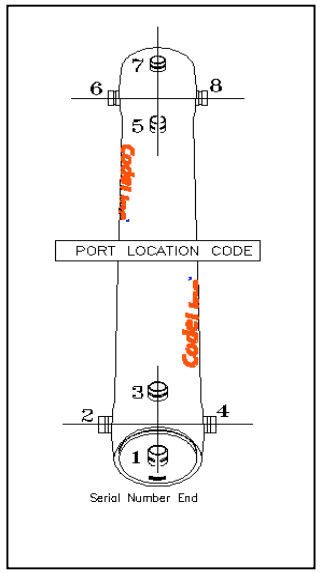

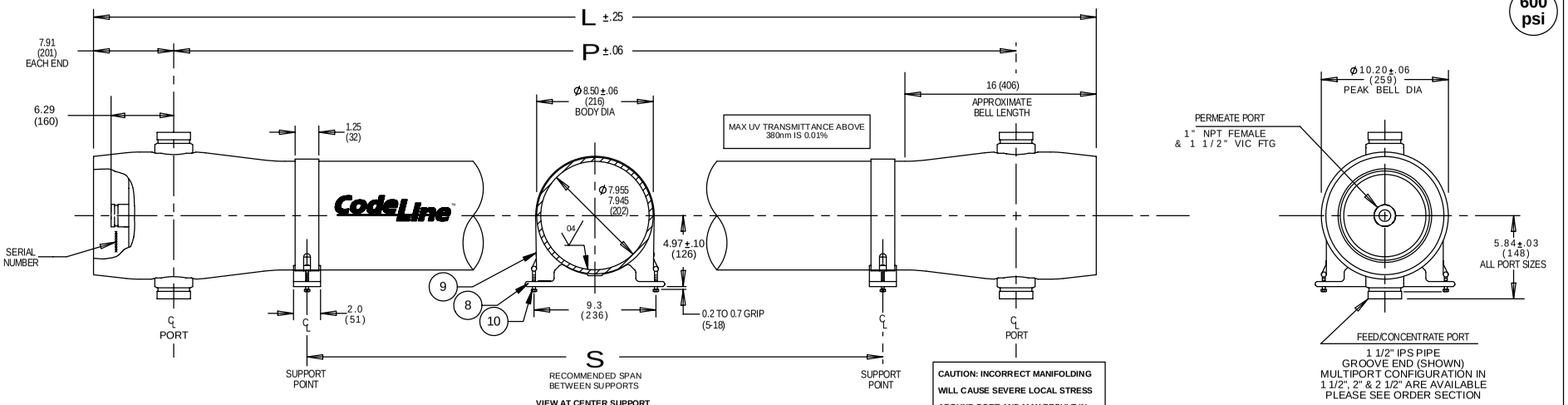

Dwg. Ref.	Qty. Per	Part Number		Description	Materials/Remarks	
				SHELL		
1	1	ORDER SECTION		Shell	Filament wound epoxy/glass composite-Head locking grooves integrally wound in-place.	
2	A/R			F/C Port	CF3M	
3	A/R			F/C Port Seal	EPDM	
				HEAD		
		CODE	NON-CODE		ASME CODE	NON-ASME CODE
4	2	52571	52570	Head Assy	Noryl backed with Steel	Noryl
5	2	52574	52574	Head Seal	EPDM - Square Cut	
6	2	52245	52245	Adapter ,seal	EPDM - O-ring	
				HEAD INTERLOCK		
7	2	52510		Locking Ring	Steel SA 105, Nickel Plated.	
				VESSEL SUPPORT		
8	* 3	52169		Universal Saddle	Engineering Thermoplastic	
9	* 3	45042		Strap Assy	304 Stainless Steel - PVC cushion	
10	6	46265		Strap Screw	5/16-18 UNC, 18-8 Stainless Steel	
				ELEMENT INTERFACE		
11	2	A/R		Adapter	Engineering Thermoplastic	
12	A/R	A/R		PWT SEAL	EPDM	
13	1	52609		Thrust Cone	Engineering Thermoplastic	

* 2 each furnished with length code 1, 2 & 3

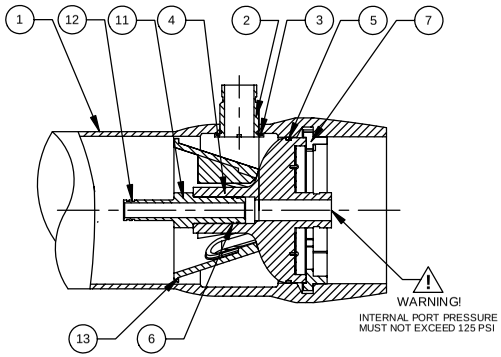

SECTION THROUGH NON-CODE END

ITEM 13 DOWNSTREAM ONLY

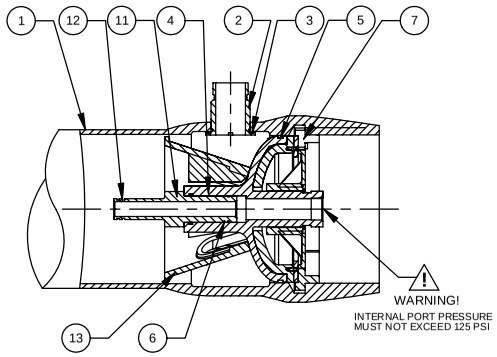

SECTION THROUGH CODE END

ITEM 13 DOWNSTREAM ONLY

NOTES

- MAX. ANGULAR VARIATION BETWEEN ANY PORTS ± 0.5°
- SHELL EXTERIOR COATED WITH WHITE, HIGH GLOSS POLYURETHANE PAINT
- DIMENSION IN INCHES (MM APPROX.)
- NOT TO BE USED FOR CONSTRUCTION UNLESS CERTIFIED

Shell Length Code	L L.O.A. IN (MM)	P Span IN (MM)	S Span IN (MM)	Approx. Weight LB (KG)
1	63 (1600)	47.0 (1194)	28X 1 (711)	104 (47)
2	103 (2616)	87.0 (2210)	56 X 1 (1422)	126 (57)
3	143 (3632)	127.0 (3226)	80 X 1 (2032)	148 (67)
4	183 (4648)	167.0 (4242)	64 X 2 (1626)	170 (77)
5	223 (5664)	207.0 (5258)	78 X 2 (1981)	192 (87)
6	263 (6680)	247.0 (6274)	92 X 2 (2337)	214 (97)
7	303 (7696)	287.0 (7290)	106 X 2 (2692)	236 (107)

CodeLine™ Pentair Water

DRAWN ARBP	CODELINE OCTA 80R60 MEMBRANE HOUSING				
CHECKED SM					
DATE 28SEP04	ECN 634	SHEET 1 OF 2	SIZE A3	NUMBER 99122	REV D

RATING:

DESIGN PRESSURE…….600 PSIG at 190°F
(4.1 MPa at 88°C)
MIN. OPERATING TEMP……...……..20°F
(-7°C)
FACTORY TEST PRESSURE….CE / ASME
900 PSIG / 780 PSIG
(6.2 MPa) (5.38 MPa)
QUALIFICATION PRESSURE……...3600 PSI
(24.8 MPa)

INTENDED USE:

The CodeLine OCTA 80R60 Fiberglass RO Pressure Vessel is designed for continuous, long term use as a housing for reverse osmosis membrane elements to desalt typical brackish waters at pressures up to 600 psi. Any make of eight-inch nominal diameter spiral-wound element is easily accommodated; the appropriate interfacing hardware for the element specified is furnished with the vessel.

The CodeLine OCTA 80R60 with Steel Backed Noryl Head is designed in accordance with the engineering standards of the Boiler and Pressure Vessel Code of the American Society of Mechanical Engineers (ASME) Code. At small additional cost vessels can be inspected during construction by an ASME Authorized Inspector and ASME Code stamped.

In case of membrane housing with Noryl Head, only the shell is ASME compliant.

The CodeLine OCTA 80R60 must be installed, operated and maintained in accordance with the listed precautions and good industrial practice to assure safe operation over a long service life.

The high performance Filament wound FRP shell must be allowed to expand under pressure; undue restraint at support points or piping connections can cause leaks to develop in the shell. This side-ported vessel requires special precautions in mounting and connection to piping so that the vessel will not be subjected to excessive stress due to bending moments acting at the side openings in the fiberglass shell. The end closure, incorporating close fitting, interlocking metal components, must be kept dry and free of corrosion; deterioration can lead to catastrophic mechanical failure of the head.

Pentair Water will assist the purchaser in determining the suitability of this standard vessel for their specific operating conditions. The final determination however, including evaluation of the standard material of construction for compatibility with the specific corrosive environment, shall be the responsibility of the purchaser. Alternate materials with enhanced corrosion resistance are available on special order.

Specifications are subject to change without notice.

PRECAUTIONS:

DO…read, understand and follow all instructions; failure to take every precaution will void warranty and may result in vessel failure
DO…mount the shell on horizontal members at span "S" using compliant vessel supports furnished; tighten hold down straps just snug
DO…align and center side ports with the manifold header. Correct, causes of misalignment in a row of vessels connected to the same header
DO…use flexible type grooved-end pipe couplings, Victaulic® Style 77 or equal, at side ports; allow full, 0.125 inch gap between port and piping, and position piping to maximize flexibility of connection.
DO…provide flexibility in, and support for piping manifolds so that vessel can grow in length under pressure without undue restraint; provide additional flexible joints in large pipes leading to manifold header.
DO…provide overpressure protection for vessel set at not more than 105% of design pressure
DO…inspect end closures regularly; replace components that have deteriorated and correct causes of corrosion

DO NOT…work on any component until first verifying that pressure is relieved from vessel
DO NOT…make rigid piping connections to ports or clamp vessel in any way that resists growth of fiberglass shell under pressure;
***ΔDIA = 0.015 in. (0.4mm) and
***ΔL = 0.2 in. (6mm) for a length code –7 vessel
DO NOT… hang piping manifolds from ports or use vessel in any way to support other components
DO NOT…tighten Permeate Port connection more than one turn past hand tight
DO NOT… operate vessel without connecting both Permeate Ports internally to complete set of elements or otherwise plug ports internally so that external piping connection is not subjected to feed pressure
DO NOT…install Spacer on downstream end of vessel
DO NOT…operate vessel without Thrust Cone installed downstream
DO NOT…pressurize vessel until double-checking to verify that the Locking Ring is in place and fully seated.
DO NOT…operate vessel at pressure and temperature in excess of its rating.
DO NOT…operate vessel with permeate pressure in excess of 125 psi at 190°F (0.86 MPa at 88^{0}C).
DO NOT…tolerate leaks or allow end closures to be routinely wetted in any way
DO NOT…operate outside the pH range 3-10.

ORDERING:
Using the chart below, please check the features you require and fax them with your purchase order to our customer service department for further processing.
For optional materials and / or feature not listed below, please consult the factory for pricing and availability

VESSEL LENGTH CODE – please check one

MODEL OCTA 80R60 ☐ -1 ☐ -2 ☐ -3 ☐ -4 ☐ -5 ☐ -6 ☐ -7

MEMBRANE BRAND AND MODEL – please check one and fill in information

- ❑ Please supply adapters for the following membrane brand and specific model
  Brand_____ Model_____
- ❑ Membrane brand and model information is not currently available, but will be supplied to Pentair Water on or before the following date. ___ / ___ / ___

CERTIFICATION REQUIRED

- ❑ ASME Stamped and National Board Registered (please consult factory for pricing)
- ❑ CE Marked
- ❑ NSF / ANSI-61 Certified
- ❑ Standard, Certified by Pentair water.

MATERIAL AND PORT CONFIGURATIONS OPTIONS – please check one
- ❑ Standard: all materials and port configurations as per drawing 99122 on the previous page
  NOTE: The options listed below will increase the vessel price. Call factory for pricing details.
- ❑ Option: Customer specified port configuration. Using the chart below, please indicate the customized options you require for each end of the pressure vessel (multiple options are available at each end).
  (Please consult factory as these options will affect pricing and vessel lead time)

FEED PORT CONFIGURATION
- ❑ Standard – 1½" IPS pipe, grooved ends, with ports in-line
- ❑ Optional – Multi-Ports™
  Using the instructions in Order Specification Sheet #99007 please fill out your feed port configuration in the space below. List port location first, followed by port size for each choice.
- ❑ 2" Triclover, Sanitary. (For Material and Head assembly details refer Dwg. No. 99125)

Serial number end ☐ ☐ ☐ ☐ ☐ ☐ ☐ ☐
Opposite end ☐ ☐ ☐ ☐ ☐ ☐ ☐ ☐

PERMEATE PORT CONFIGURATION:
- ❑ Standard
- ❑ 1" Triclover.
  (For Material and Head assembly details refer Dwg. No. 99125)

For complete information on proper use of the vessel
Please refer to the OCTA 80R Series USER'S GUIDE

PORT SIZE CODE	
D	1½" GROOVED END
E	2" GROOVED END
F	2½" GROOVED END

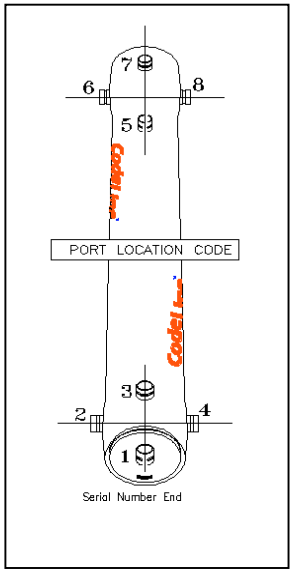

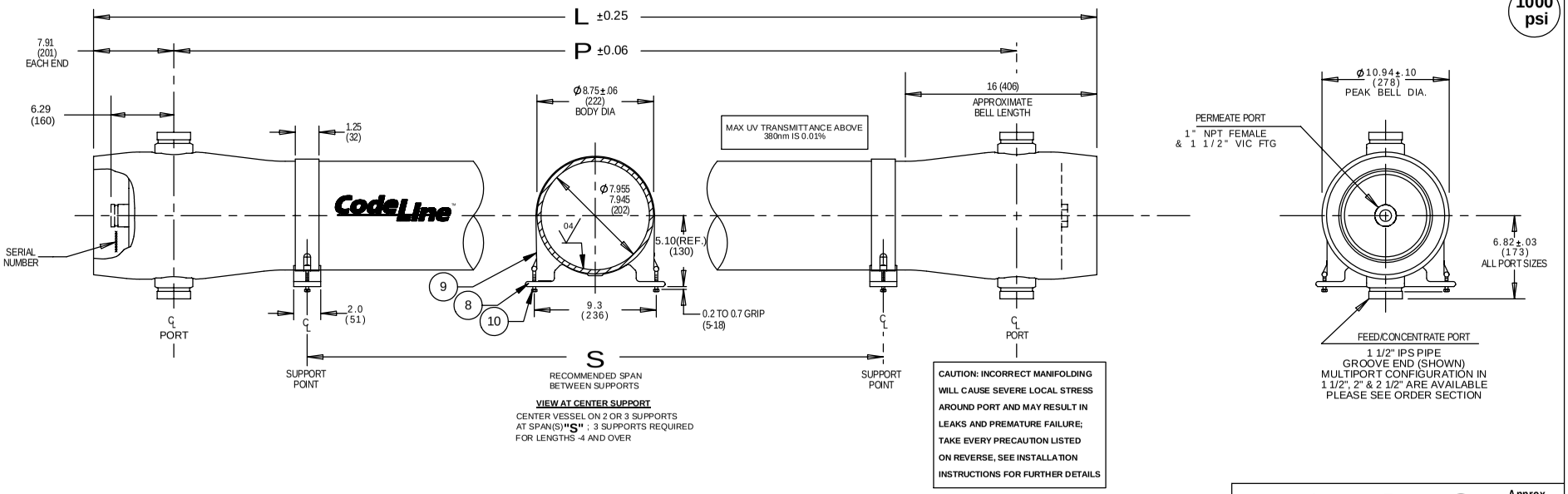

Dwg. Ref.	Qty. Per	Part Number	Description	Materials/Remarks
			SHELL	
1	1	ORDER SECTION	Shell	Filament wound epoxy/glass composite-Head locking grooves integrally wound in-place.
2	A/R		F/C Port	CN3MN
3	A/R		F/C Port Seal	EPDM
			HEAD	
4	2	96036	Head Assy	Noryl backed by Steel
5	2	52574	Head Seal	EPDM- Square Cut
6	2	52245	Adapter ,seal	EPDM - O-ring
			HEAD INTERLOCK	
7	2	52510	Locking Ring	Steel SA 105, Nickel Plated.
			VESSEL SUPPORT	
8	* 3	52169	Universal Saddle	Engineering Thermoplastic
9	* 3	45042	Strap Assy	304 Stainless Steel - PVC cushion
10	6	46265	Strap Screw	5/16-18 UNC, 18-8 Stainless Steel
			ELEMENT INTERFACE	
11	2	A/R	Adapter	Engineering Thermoplastic
12	A/R	A/R	PWT SEAL	EPDM
13	1	52609	Thrust Cone	Engineering Thermoplastic

* 2 each furnished with length code 1, 2 & 3

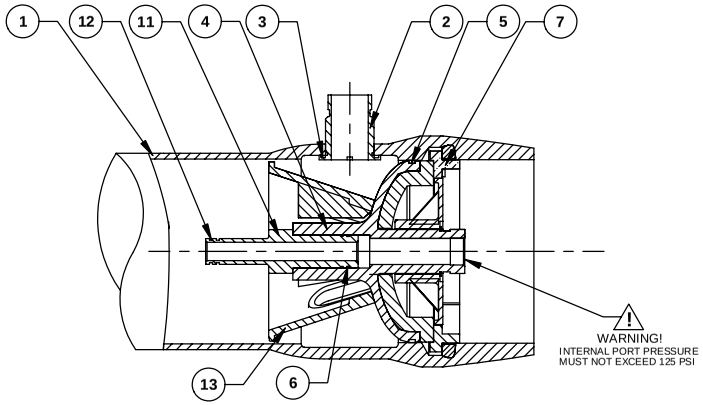

NOTES

- MAX. ANGULAR VARIATION BETWEEN ANY PORTS ± 0.5°
- SHELL EXTERIOR COATED WITH WHITE, HIGH GLOSS POLYURETHANE PAINT
- DIMENSION IN INCHES (MM APPROX.)
- NOT TO BE USED FOR CONSTRUCTION

SECTION THROUGH END CLOSURE

ITEM 13 DOWNSTREAM ONLY

Shell Length Code	L L.O.A. IN (MM)	P Span IN (MM)	S Span IN (MM)	Approx. Weight LB (KG)
1	63 (1600)	47.0 (1194)	28X 1 (711)	152 (69)
2	103 (2616)	87.0 (2210)	56 X 1 (1422)	185 (84)
3	143 (3632)	127.0 (3226)	80 X 1 (2032)	218 (99)
4	183 (4648)	167.0 (4242)	64 X 2 (1626)	251 (114)
5	223 (5664)	207.0 (5258)	78 X 2 (1981)	284 (129)
6	263 (6680)	247.0 (6274)	92 X 2 (2337)	318 (144)
7	303 (7696)	287.0 (7290)	106 X 2 (2692)	351 (159)

CodeLine™ Pentair Water

DRAWN ARBP	CODELINE OCTA 80R100 MEMBRANE HOUSING				
CHECKED SM					
DATE 14 JUL 04	ECN 662	SHEET 1 OF 2	SIZE A3	NUMBER 99123	REV D

RATING:

DESIGN PRESSURE……....1000 PSIG at 150°F (6.9 MPa at 66°C)
MIN. OPERATING TEMP……..…..……..20°F (-7°C)
FACTORY TEST PRESSURE….CE / ASME
1500 PSIG / 1300 PSIG
(10.3 MPa) (8.96 MPa)
QUALIFICATION PRESSURE..……....6000 PSI (41.37 MPa)

INTENDED USE:

The CodeLine OCTA 80R100 Fiberglass RO Pressure Vessel is designed for continuous, long term use as a housing for reverse osmosis membrane elements to desalt typical brackish and sea waters at pressures up to 1000 psi. Any make of eight-inch nominal diameter spiral-wound element is easily accommodated; the appropriate interfacing hardware for the element specified is furnished with the vessel.

The CodeLine OCTA 80R100 with Steel Backed Noryl Head is designed in accordance with the engineering standards of the Boiler and Pressure Vessel Code of the American Society of Mechanical Engineers (ASME) Code. At small additional cost vessels can be inspected during construction by an ASME Authorized Inspector and ASME Code stamped.

The CodeLine OCTA 80R100 must be installed, operated and maintained in accordance with the listed precautions and good industrial practice to assure safe operation over a long service life.

The high performance Filament wound FRP shell must be allowed to expand under pressure; undue restraint at support points or piping connections can cause leaks to develop in the shell. This side-ported vessel requires special precautions in mounting and connection to piping so that the vessel will not be subjected to excessive stress due to bending moments acting at the side openings in the fiberglass shell. The end closure, incorporating close fitting, interlocking metal components, must be kept dry and free of corrosion; deterioration can lead to catastrophic mechanical failure of the head.

Pentair Water will assist the purchaser in determining the suitability of this standard vessel for their specific operating conditions. The final determination however, including evaluation of the standard material of construction for compatibility with the specific corrosive environment, shall be the responsibility of the purchaser. Alternate materials with enhanced corrosion resistance are available on special order.

Note: This vessel can be operated at 190°F (88°C) upto 600 psi (4.1 MPa)

PRECAUTIONS:

DO…read, understand and follow all instructions; failure to take every precaution will void warranty and may result in vessel failure
DO…mount the shell on horizontal members at span "S" using compliant vessel supports furnished; tighten hold down straps just snug
DO…align and center side ports with the manifold header. Correct, causes of misalignment in a row of vessels connected to the same header
DO…use flexible type grooved-end pipe couplings, Victaulic® Style 77 or equal, at side ports; allow full, 0.125 inch gap between port and piping, and position piping to maximize flexibility of connection.
DO…provide flexibility in, and support for piping manifolds so that vessel can grow in length under pressure without undue restraint; provide additional flexible joints in large pipes leading to manifold header.
DO…provide overpressure protection for vessel set at not more than 105% of design pressure
DO…inspect end closures regularly; replace components that have deteriorated and correct causes of corrosion

DO NOT…work on any component until first verifying that pressure is relieved from vessel
DO NOT…make rigid piping connections to ports or clamp vessel in any way that resists growth of fiberglass shell under pressure;
***ΔDIA = 0.015 in. (0.4mm) and
***ΔL = 0.2 in. (6mm) for a length code –7 vessel
DO NOT… hang piping manifolds from ports or use vessel in any way to support other components
DO NOT…tighten Permeate Port connection more than one turn past hand tight
DO NOT… operate vessel without connecting both Permeate Ports internally to complete set of elements or otherwise plug ports internally so that external piping connection is not subjected to feed pressure
DO NOT…install Spacer on downstream end of vessel
DO NOT…operate vessel without Thrust Cone installed downstream
DO NOT…pressurize vessel until double-checking to verify that the Locking Ring is in place and fully seated.
DO NOT…operate vessel at pressure and temperature in excess of its rating.
DO NOT…operate vessel with permeate pressure in excess of 125 psi at 190°F (0.86 MPa at 88°C).
DO NOT…tolerate leaks or allow end closures to be routinely wetted in any way
DO NOT…operate outside the pH range 3-10.

ORDERING:
Using the chart below, please check the features you require and fax them with your purchase order to our customer service department for further processing.
For optional materials and / or feature not listed below, please consult the factory for pricing and availability

VESSEL LENGTH CODE – please check one

MODEL OCTA 80R100 ☐ -1 ☐ -2 ☐ -3 ☐ -4 ☐ -5 ☐ -6 ☐ -7

MEMBRANE BRAND AND MODEL – please check one and fill in information

❑ Please supply adapters for the following membrane brand and specific model
Brand_____ Model_____

❑ Membrane brand and model information is not currently available, but will be supplied to Pentair Water on or before the following date. ___ / ___ / ___

CERTIFICATION REQUIRED

❑ ASME Stamped and National Board Registered (please consult factory for pricing)
❑ CE Marked
❑ NSF / ANSI-61 Certified
❑ Standard, Certified by Pentair water.

MATERIAL AND PORT CONFIGURATIONS OPTIONS – please check one
❑ Standard: all materials and port configurations as per drawing 99123 on the previous page
NOTE: The options listed below will increase the vessel price. Call factory for pricing details.
❑ Option: Customer specified port configuration. Using the chart below, please indicate the customized options you require for each end of the pressure vessel (multiple options are available at each end).
(Please consult factory as these options will affect pricing and vessel lead time)

PORT SIZE CODE	
D	1½" GROOVED END
E	2" GROOVED END
F	2½" GROOVED END

FEED PORT CONFIGURATION
❑ Standard – 1½" IPS pipe, grooved ends, with ports in·
❑ Optional – Multi-Ports™
Using the instructions in Order Specification Sheet #9 please fill out your feed port configuration in the space below. Ports not available in 90^0 configurations.
List port location first, followed by port size for each port.

Serial number end ☐ ☐ ☐ ☐ ☐ ☐ ☐ ☐
Opposite end ☐ ☐ ☐ ☐ ☐ ☐ ☐ ☐

For complete information on proper use of the vessel
Please refer to the OCTA 80R Series USER'S GUIDE

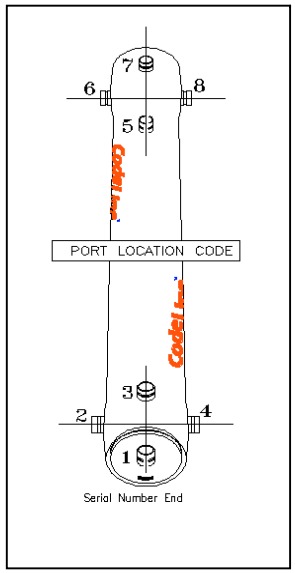

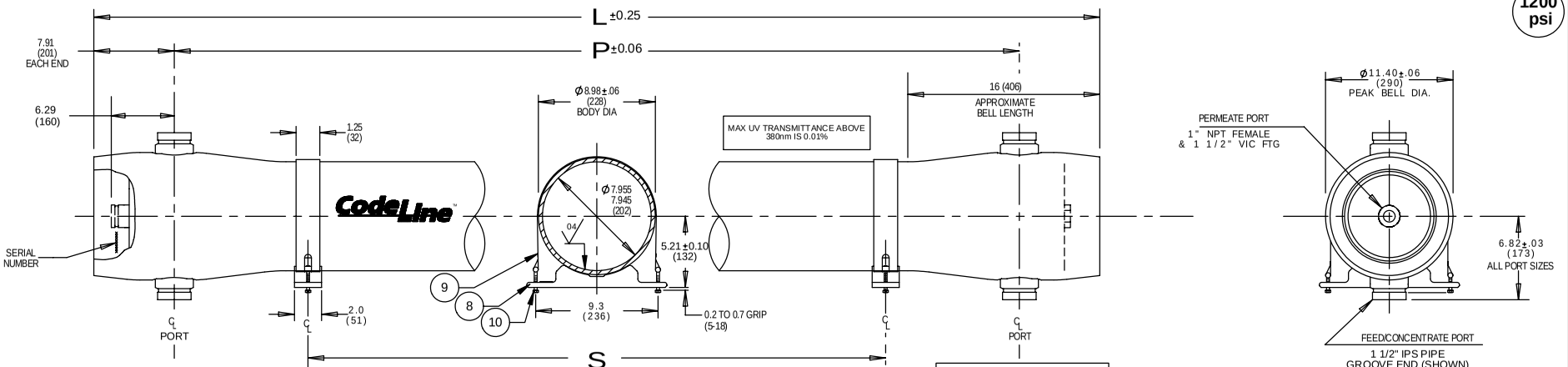

Dwg. Ref.	Qty. Per	Part Number	Description	Materials/Remarks
			SHELL	
1	1	ORDER SECTION	Shell	Filament wound epoxy/glass composite-Head locking grooves integrally wound in-place.
2	A/R		F/C Port	CN3MN
3	A/R		F/C Port Seal	EPDM
			HEAD	
4	2	96036	Head Assy	Noryl backed with Steel
5	2	52574	Head Seal	EPDM - Square Cut
6	2	52245	Adapter ,seal	EPDM - O-ring
			HEAD INTERLOCK	
7	2	52510	Locking Ring	Steel SA 105, Nickel Plated.
			VESSEL SUPPORT	
8	* 3	52169	Universal Saddle	Engineering Thermoplastic
9	* 3	45042	Strap Assy	304 Stainless Steel - PVC cushion
10	6	46265	Strap Screw	5/16-18 UNC, 18-8 Stainless Steel
			ELEMENT INTERFACE	
11	2	A/R	Adapter	Engineering Thermoplastic
12	A/R	A/R	PWT SEAL	EPDM
13	1	52609	Thrust Cone	Engineering Thermoplastic

* 2 each furnished with length code 1, 2 & 3

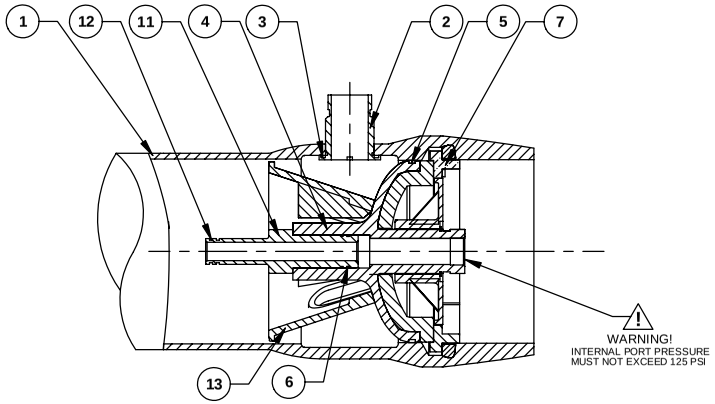

NOTES

- MAX. ANGULAR VARIATION BETWEEN ANY PORTS ± 0.5°
- SHELL EXTERIOR COATED WITH WHITE, HIGH GLOSS POLYURETHANE PAINT
- DIMENSION IN INCHES (MM APPROX.)
- NOT TO BE USED FOR CONSTRUCTION

SECTION THROUGH END CLOSURE

ITEM 13 DOWNSTREAM ONLY

Shell Length Code	L L.O.A. IN (MM)	P Span IN (MM)	S Span IN (MM)	Approx. Weight LB (KG)
1	63 (1600)	47.0 (1194)	28X 1 (711)	185 (84)
2	103 (2616)	87.0 (2210)	56 X 1 (1422)	229 (104)
3	143 (3632)	127.0 (3226)	80 X 1 (2032)	273 (124)
4	183 (4648)	167.0 (4242)	64 X 2 (1626)	318 (144)
5	223 (5664)	207.0 (5258)	78 X 2 (1981)	362 (164)
6	263 (6680)	247.0 (6274)	92 X 2 (2337)	406 (184)
7	303 (7696)	287.0 (7290)	106 X 2 (2692)	450 (204)

CodeLine™ Pentair Water

DRAWN ARBP	CODELINE OCTA 80R120 MEMBRANE HOUSING				
CHECKED SM					
DATE 28 SEP 04	ECN 634	SHEET 1 OF 2	SIZE A3	NUMBER 99124	REV D

RATING:

DESIGN PRESSURE…….1200 PSIG at 150°F
(8.3 MPa at 66°C)
MIN. OPERATING TEMP……..……..……..20°F
(-7°C)
FACTORY TEST PRESSURE…. CE / ASME
1800 PSIG / 1560 PSIG
(12.41 MPa) (10.76 MPa)
QULIFICATION PRESSURE……..……...7200 PSI
(49.64 MPa)

INTENDED USE:

The CodeLine OCTA 80R120 Fiberglass RO Pressure Vessel is designed for continuous, long term use as a housing for reverse osmosis membrane elements to desalt typical brackish and sea waters at pressures up to 1200 psi. Any make of eight-inch nominal diameter spiral-wound element is easily accommodated; the appropriate interfacing hardware for the element specified is furnished with the vessel.

The CodeLine OCTA 80R120 with Steel Backed Noryl Head is designed in accordance with the engineering standards of the Boiler and Pressure Vessel Code of the American Society of Mechanical Engineers (ASME) Code. At small additional cost vessels can be inspected during construction by an ASME Authorized Inspector and ASME Code stamped.

The CodeLine OCTA 80R120 must be installed, operated and maintained in accordance with the listed precautions and good industrial practice to assure safe operation over a long service life.

The high performance Filament wound FRP shell must be allowed to expand under pressure; undue restraint at support points or piping connections can cause leaks to develop in the shell. This side-ported vessel requires special precautions in mounting and connection to piping so that the vessel will not be subjected to excessive stress due to bending moments acting at the side openings in the fiberglass shell. The end closure, incorporating close fitting, interlocking metal components, must be kept dry and free of corrosion; deterioration can lead to catastrophic mechanical failure of the head.

Pentair Water will assist the purchaser in determining the suitability of this standard vessel for their specific operating conditions. The final determination however, including evaluation of the standard material of construction for compatibility with the specific corrosive environment, shall be the responsibility of the purchaser. Alternate materials with enhanced corrosion resistance are available on special order.

Note: This vessel can be operated at 190°F (88°C) upto 600 psi (4.1 MPa)

PRECAUTIONS:

DO…read, understand and follow all instructions; failure to take every precaution will void warranty and may result in vessel failure
DO…mount the shell on horizontal members at span "S" using compliant vessel supports furnished; tighten hold down straps just snug
DO…align and center side ports with the manifold header. Correct, causes of misalignment in a row of vessels connected to the same header
DO…use flexible type grooved-end pipe couplings, Victaulic® Style 77 or equal, at side ports; allow full, 0.125 inch gap between port and piping, and position piping to maximize flexibility of connection.
DO…provide flexibility in, and support for piping manifolds so that vessel can grow in length under pressure without undue restraint; provide additional flexible joints in large pipes leading to manifold header.
DO…provide overpressure protection for vessel set at not more than 105% of design pressure
DO…inspect end closures regularly; replace components that have deteriorated and correct causes of corrosion

DO NOT…work on any component until first verifying that pressure is relieved from vessel
DO NOT…make rigid piping connections to ports or clamp vessel in any way that resists growth of fiberglass shell under pressure;
***ΔDIA = 0.015 in. (0.4mm) and
***ΔL = 0.2 in. (6mm) for a length code –7 vessel
DO NOT… hang piping manifolds from ports or use vessel in any way to support other components
DO NOT…tighten Permeate Port connection more than one turn past hand tight
DO NOT… operate vessel without connecting both Permeate Ports internally to complete set of elements or otherwise plug ports internally so that external piping connection is not subjected to feed pressure
DO NOT…install Spacer on downstream end of vessel
DO NOT…operate vessel without Thrust Cone installed downstream
DO NOT…pressurize vessel until double-checking to verify that the Locking Ring is in place and fully seated.
DO NOT…operate vessel at pressure and temperature in excess of its rating.
DO NOT…operate vessel with permeate pressure in excess of 125 psi at 190°F (0.86 MPa at 88°C).
DO NOT…tolerate leaks or allow end closures to be routinely wetted in any way
DO NOT…operate outside the pH range 3-10.

ORDERING:
Using the chart below, please check the features you require and fax them with your purchase order to our customer service department for further processing.
For optional materials and / or feature not listed below, please consult the factory for pricing and availability

VESSEL LENGTH CODE – please check one

MODEL OCTA 80R120 ☐ -1 ☐ -2 ☐ -3 ☐ -4 ☐ -5 ☐ -6 ☐ -7

MEMBRANE BRAND AND MODEL – please check one and fill in information

- ❑ Please supply adapters for the following membrane brand and specific model
  Brand_____ Model_____
- ❑ Membrane brand and model information is not currently available, but will be supplied to Pentair Water on or before the following date. ___ / ___ / ___

CERTIFICATION REQUIRED

- ❑ ASME Stamped and National Board Registered (please consult factory for pricing)
- ❑ CE Marked
- ❑ NSF / ANSI-61 Certified
- ❑ Standard, Certified by Pentair water.

MATERIAL AND PORT CONFIGURATIONS OPTIONS – please check one
- ❑ Standard: all materials and port configurations as per drawing 99124 on the previous page
  NOTE: The options listed below will increase the vessel price. Call factory for pricing details.
- ❑ Option: Customer specified port configuration. Using the chart below, please indicate the customized options you require for each end of the pressure vessel (multiple options are available at each end).
  (Please consult factory as these options will affect pricing and vessel lead time)

PORT SIZE CODE	
D	1½" GROOVED END
E	2" GROOVED END
F	2½" GROOVED END

FEED PORT CONFIGURATION
- ❑ Standard – 1½" IPS pipe, grooved ends, with ports in-line
- ❑ Optional – Multi-Ports™
  Using the instructions in Order Specification Sheet #99007 please fill out your feed port configuration in the space below. Ports not available in 90° configurations.
  List port location first, followed by port size for each port.

Serial number end ☐ ☐ ☐ ☐ ☐ ☐ ☐ ☐
Opposite end ☐ ☐ ☐ ☐ ☐ ☐ ☐ ☐

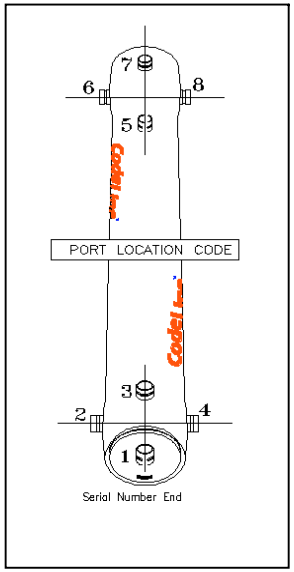

For complete information on proper use of the vessel
Please refer to the OCTA 80R Series USER'S GUIDE

OCTA 80R ☐ ☐☐☐☐☐☐ ☐☐☐☐☐☐

MODEL

15
30
45
△1 60
100
120

LOCATION
SIZE
LOCATION
SIZE
LOCATION
SIZE

LOCATION
SIZE
LOCATION
SIZE
LOCATION
SIZE

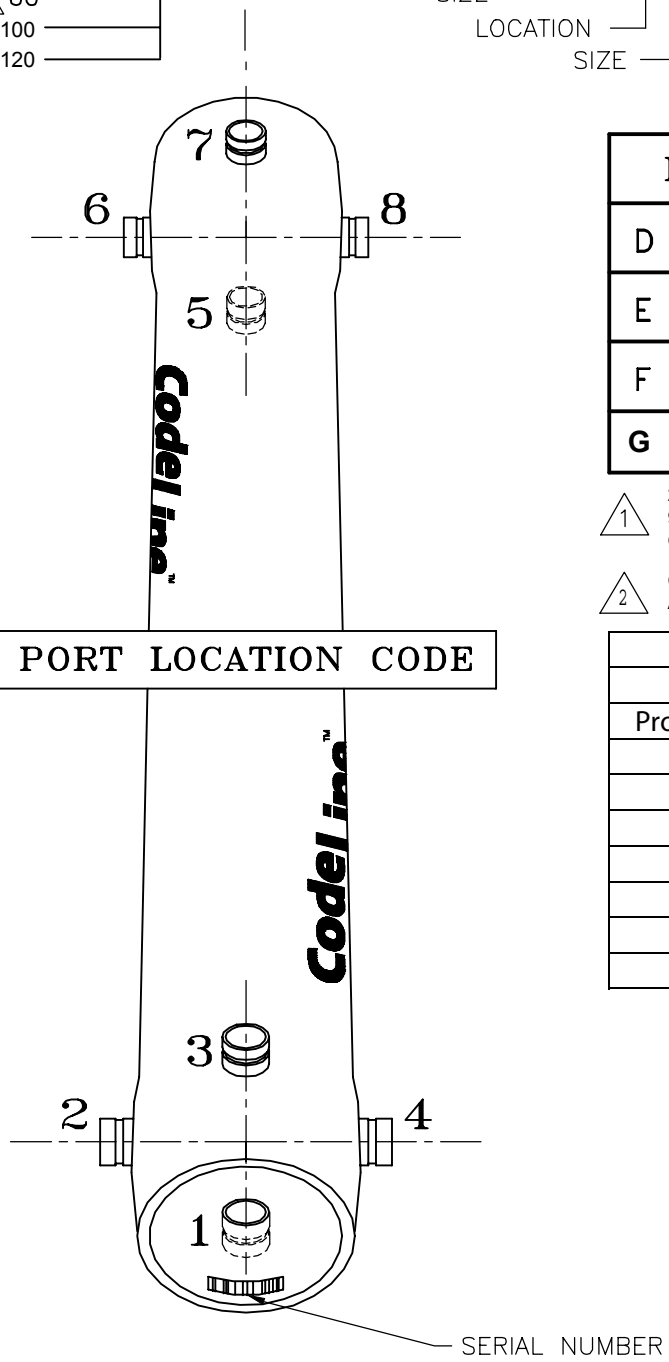

PORT LOCATION CODE

PORT SIZE CODE	
D	1 1/2" GROOVED END
E	2" GROOVED END
F	2 1/2" GROOVED END △1
G	3" GROOVED END △2

Material	
316L	
AL6XN	

△1 2-1/2" PORTS ARE NOT ALLOWED 90 DEGREES FROM ANY PORT ON OCTA 80R100 AND OCTA 80R120.

△2 CONSULT YOUR SALES MANAGER ABOUT SPECIFICATIONS ON 3" PORTS.

Date	
Customer	
Project Name / Number	
P.O. Number	
Ship to Address	
ASME	
Membrane	
Heads	
Sanitary ports	
Others	

For Internal Use Only	
S.O. Number	
Ship Date	

CodeLine™
Pentair Water

Approved by CUSTOMER: _____

PLEASE FAX THIS SHEET WITH YOUR ORDER TO: CODELINE CUSTOMER SERVICE DEPT.

www.codeline.com

ORDER SPECIFICATION SHEET
CODELINE OCTA 80R SERIES

SIZE AND LOCATION OF PORTS

ECN	SHEET	SIZE	NUMBER	REV
436	1 OF 1	A	99007	A

Piping Recommendations

Various methods of connecting sideport vessel to manifolds are possible. The recommendation method is to connect each vessel side port to the manifold using two flexible Victaulic® joints and an intermediate piping section. A 90^0-elbow would be ideal, however, a straight piping connection would also be acceptable. This two joint method is preferred over a single Victaulic® connection because it does not require as much care in vessel alignment and manifold welding accuracy. *Figures 1 & 2* illustrate the preferred method.

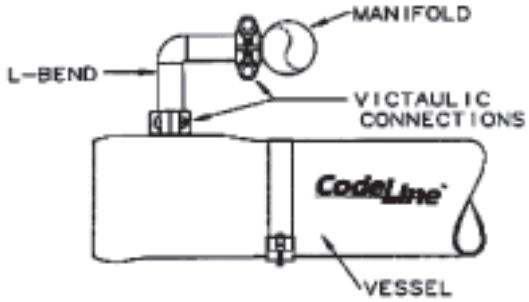

Figure 1

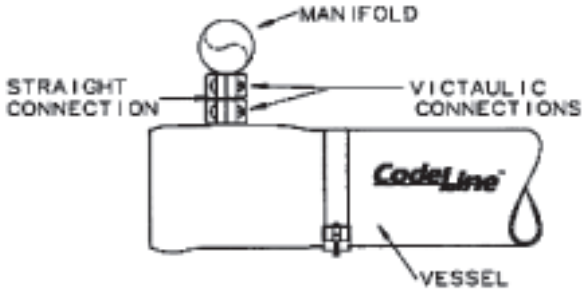

Figure 2

Piping Recommendations contd...

An alternate method using a single Victaulic® is acceptable but requires more thoughtful execution. The manifold must be fabricated using close tolerances to help ensure correct alignment. Installation must follow a sequence of assembly steps to initially ensure correct shell to manifold alignment. First, the vessel should be set into the rack and secured loosely into position using the mounting straps. Then connect the vessels to the manifold position for the best alignment possible. At this time set the side port to manifold clearance at .125 inches (3.17 mm) per Victaulic® recommendations for cut groove applications. After proper alignment is achieved, secure the shell and fix the manifolds into position. (See figure 3 & 4 for reference).

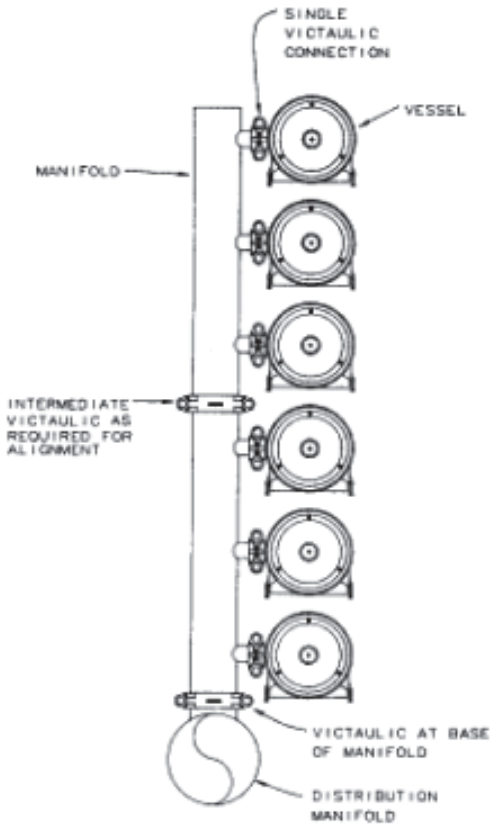

Figure 3

Piping Recommendations contd...

Even though a single Victaulic® coupling arrangement may be the choice for low cost and compactness, it brings with it the necessity to provide the required amount of flexibility in some other way.

A Victaulic® coupling allows angular but not lateral misalignment. Two rigidly restrained pipes not lying on a common axis can be forced to align if the fit is close enough to allow the two halves of the coupling to be pulled together by the bolts. This practice is not recommended. The resulting stresses are complex and have leveraged intensity. Any misalignment must therefore be kept to an absolute minimum.

Figure 3 illustrates how Victaulic® couplings might be incorporated in the manifolds to alleviate misalignment where a line of vessels is connected to a common manifold header and only one flexible Victaulic® joint is used between the vessel and the manifold.

In checking for correct alignment, the maximum axial misalignment from port to manifold should be .030 inches (.76 mm) in any direction (See figure 5). While exceeding .030 inches (.76 mm) misalignment should not significantly reduce vessel safety, it may decrease vessel service life. A recommended method of checking for acceptable alignment is to test for coupler rotation.

To use the rotation method, install the Victaulic® coupling between the vessel side port and the manifold. With the two coupling bolts tightened until snug, you should be able to rotate the coupling by hand. If hand rotation is possible, the alignment will be acceptable.

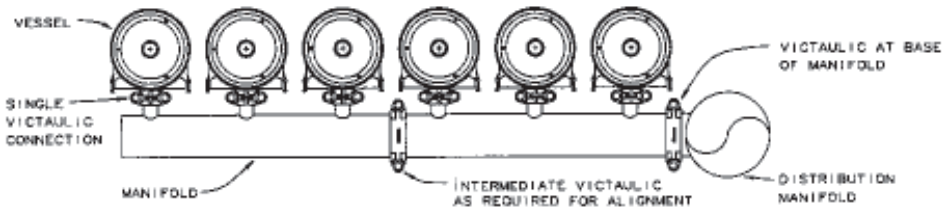

Figure 4

Figure 5

CodeLine
Pentair Water

Multi-Porting Information

What is Multi-porting and what can it do for your system?

Multi-porting is a term used to describe membrane housings that feature more than one feed or concentrate port per end. For example, two or three ports in the feed end of a membrane housing. Multi-porting allows vessels to be directly linked together. This powerful feature offers the opportunity to eliminate traditional manifolds resulting in potential system cost savings. While the cost reduction aspect of this technology is enticing, system performance must be carefully evaluated to assure that long term system performance is not compromised by improper port sizing.

While using multi-ported housings is not difficult, there are many variables that need to be properly addressed before vessels can be specified. To help ensure the performance of your system, please carefully consider the guidelines and pressure drop data on the following pages when attempting to eliminate external manifolds.

DO

Evaluate the affect of pressure drop
Consider how the drop across each vessel plenum affects the permeate and concentrate flow through each vessel.

Flow Balance the system
Take the combined concentrate flow from the last vessel in a particular pass.

Consider feeding from both ends or the centre of a pass
If differential pressure when feed from one end would be excessive.

Check with your membrane supplier
Let your supplier evaluate the performance of your proposed system.

Read the following pages for more detailed guidelines.

DO NOT

Use reduced port sizes
Using port sizes smaller that you would with an external manifold will create pressure drop problem.

Exceed traditional flow velocities
Even though the pressure drop across each vessel may be minimal, the water velocity should be kept at a reasonable rate.

Reduce the size of the feed/concentrate ports in a particular pass
Avoid this temptation unless you have carefully evaluated the affect of pressure drop on system performance.

Assume that Pentair endorses multi-porting for your system for all applications.
Just because vessels can be bolted together does not mean that Pentair endorses or recommends such use for your particular application. Pentair is not responsible for the mis-application of the multi-port option.

Multi-Porting Information contd...

Detailed guidelines for using Multi-Port membrane housings to eliminate manifolds

CAUTION

The following are Guidelines only. They are intended to aid the Purchaser when using Multi-port feature to eliminate manifolds. It is the system designer's responsibility to evaluate the specific application and carefully consider these guidelines when sizing ports.

Improper port sizing could lead to poor system performance and/or damage to membrane elements. Please contact Pentair if clarification of these Guidelines is required.

Evaluate the pressure drop across each vessel phenum (at the side port entry region) as this will affect the permeate and concentrate flows in each vessel.

Typically the feed and concentrate manifolds connecting to a number of vessels are designed to minimize variations in flow through the vessels. This is accomplished by assuring that the pressure throughout a manifold is nearly equal. The greater the differential across a particular manifold, or set of manifolds, the greater the potential for variations in the average feed pressure as well as the differential pressure across the different vessels in a pass. These factors will effect the flow of the product as well as the flow through the vessels.

The same considerations apply when attempting to eliminate manifolds by linking vessels directly together using Multi-port vessels. In this case, the pressure drop across the vessel plenum, as well as the entrance and exit losses through the side ports, must be considered. To simplify this process, we have provided actual test data which quantifies the total pressure drop versus the flow rate for various size ports.

This data is conservative in that the entire flow to a particular vessel during testing flowed through the vessel plenum and exited through the port that was opposite the feed. In actual systems, the flow through the vessel plenum would be reduced by the amount of flow of product and concentrate from that vessel. Although the test vessel contained an element , and all necessary hardware, there was no flow of product or concentrate. The test setup is given in Figure 1.

Flow balance the system by taking the combined concentrate flow from the last vessel in a particular pass.

This practice is commonly used when multiple filters are connected in parallel. If the feed comes in the first vessel the combined concentrate should exit the last vessel.

Multi-Porting Information contd...

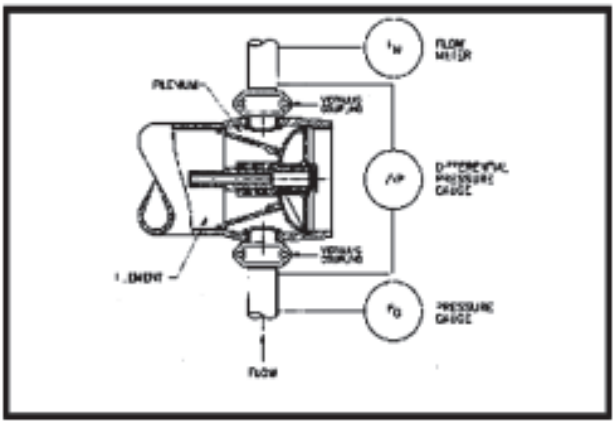

Figure 1 - Test Set-Up

The feed pressure to the last vessel will always be less than the feed pressure to the first vessel. By flow balancing, the concentrate pressure of the last vessel will also be the lowest of any vessel. This tends to keep the pressure drop across all vessels to be as close as possible.
The flow pattern is shown in Figure 2.

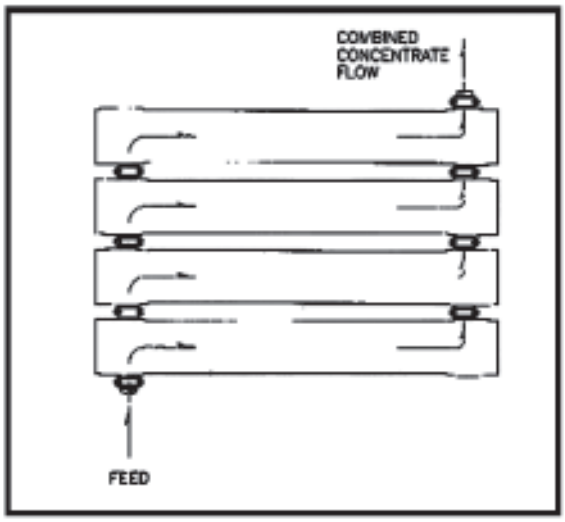

Figure 2 - Flow Balancing

The down side of this arrangement is that it will cause the average feed flow pressure between the first and last vessel to be at a maximum value thus affecting permeate flow in he last vessel.

For simplicity of piping, some customers may desire to take combined concentrate flow from the first vessel in a particular pass. This will result in a lower differential pressure and thus a lower concentrate flow in the last vessel. While this practice is less conservative than flow balancing, it has been successfully used in some systems. **In any event, the performance of the membranes in each vessel should be checked to confirm that all are within the membrane manufacturer's guidelines.**

Multi-Porting Information contd...

Consider feeding from both sides or the center of a pass if the differential pressure when feeding from one side would be excessive.

By splitting the feed flow the velocity will be reduced by one half and the pressure drop by an even greater amount since the pressure drop is proportional to the square of the flow. Feeding from both sides may be most economically feasible where the pressure is low enough to use plastic pipe. This option is shown in Figure 3.

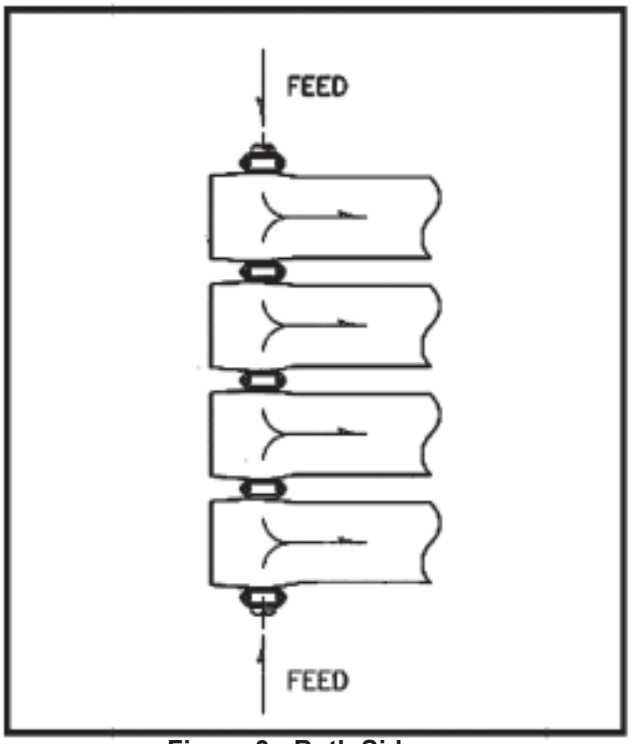

Figure 3 - Both Sides

Feeding from the center of the pass will either require the use of a tee as shown in Figure 4A or additional feed ports in the two center vessels as shown in Figure 4B.

Check with your membrane supplier for evaluation of membrane performance of your proposed system.

When properly sized, use of Multi-port vessels to eliminate external manifolds will have little if any affect on overall system performance. However, as pressure drops are increased, systems that are already being operated close to the edge of recommended conditions may experience problems within one or more vessels. It is therefore recommended that worst case conditions be evaluated carefully in conjunction with your membrane supplier.

Multi-Porting Information contd...

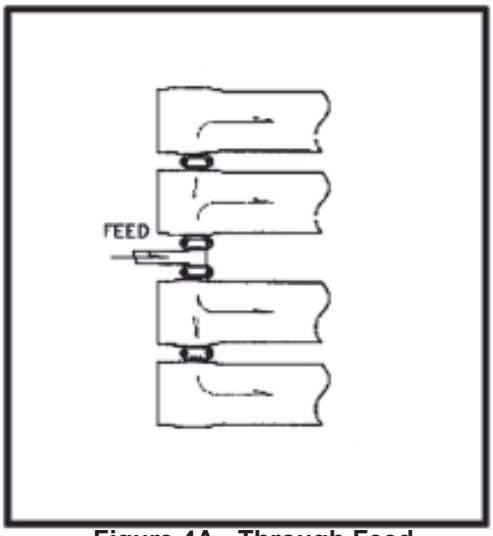

Figure 4A - Through Feed

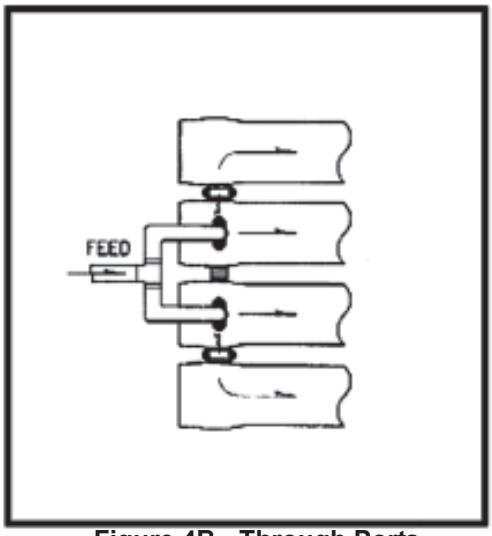

Figure 4B - Through Ports

Consider the effects of higher velocities that may occur during special situation such as flushing or cleaning.

It is sometimes advantageous to flush or clean systems at velocities higher than normal. These situations must be carefully considered when selecting port sizes. Pressure drops may be considerably increased under such conditions.

Do not size ports smaller than you would with external manifold.

Pressure drops across the plenum of a vessel will always be greater than through an equal length of straight pipe of the same size as the port. For this reason you should always select ports at least equal to, and possibly greater than, the size of pipe you would use if manifolds were external.

Do not reduce the size of the feed/concentrate ports in a particular pass, as shown in Figure 5, unless you have carefully evaluated the affect on system performance of such reductions.

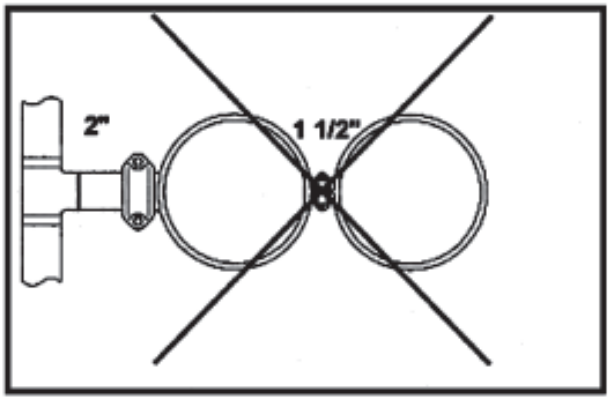

Figure 5

Multi-Porting Information contd...

Unlike with external manifolds, it is easy to reduce the size of ports of vessels which are linked together. The feed port may be one size and the port directly opposite it can be specified a smaller size. This however could lead to excessive pressure drops. Again, evaluate the affects of such a design carefully.

Do not exceed traditional flow velocities. Even though the pressure drop across each vessel may be acceptable, the velocity of the water through each port must also be evaluated. It is suggested that the water velocity throughout the entire system be checked for proper velocity, however, the first connection from the feed source is typically where problems can occur. While the length of each feed port is very short, velocities in excess of 11 ft. per second should be avoided to help ensure proper system performance. For your convenience, we have included the published velocities for schedule 40 pipe in this bulletin.

Do not assume, because a set of vessels can be manifolded together, that Pentair recommends or endorses such use in your particular application.

Used properly, multi-porting opens up a whole new world of potential cost savings. With this opportunity comes a responsibility to carefully evaluate projected membrane performance. Pentair recommends that you work directly with your membrane supplier to obtain approval of your proposed design.

Multi-Porting Information contd...

NOTE

Please be aware that this data represents CodeLine™ OCTA Series vessels only and does not represent other vessel manufacturer' s product.

HI-FLOW TEST
FOR CODELINE™ OCTA 80R SERIES VESSELS

WATER VELOCITY IN FEET PER SECOND
(METERS PER SECOND)

PORT SIZES	25 (95)	50 (189)	75 (284)	100 (379)	125 (473)	150 (567)	175 (662)	200 (757)
1 1/2"	3.9 (1.19)	7.8 (2.37)	11.8 (3.60)					
2"	2.4 (.73)	4.7 (1.43)	7.2 (2.19)	9.6 (2.93)	12 (3.66)			
2 1/2"	1.7 (.52)	3.4 (1.04)	5.0 (1.52)	6.7 (2.04)	8.4 (2.56)	10 (3.05)	11.7 (3.57)	13.4 (4.08)

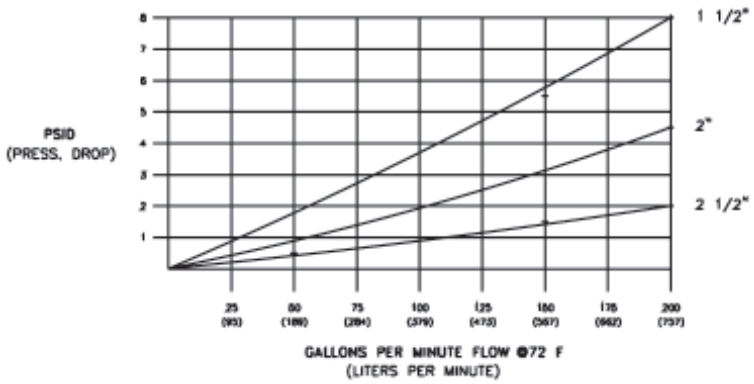

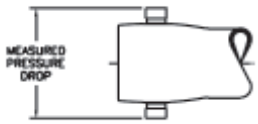

Component List for OCTA Models

Spares for OCTA 80R15 / 30 / 45 / 60 models	
Part No.	**Description**
52510	Locking Ring
52574	Head Seal
52609	Thrust Cone
52245	Adapter Seal
Coded Head Assembly	
52571	Head Assembly
52501	Elliptical Head
52576	Spacer Plate
52590	Screw
52506	Universal Noryl Head
45247	Port Retainer
52500	Securing Plate
Non Coded Head Assembly	
52570	Noryl Head Assembly
Vessel Support for all OCTA models	
52169	Saddle
45042	Strap Assembly
46265	Strap Screw

Component List for OCTA Models

Spares for OCTA 80R100 / 120 models	
Part No.	**Description**
96036	Head Assembly
52502	Head Elliptical
52506	Universal Noryl Head
45247	Port Retainer
52500	Securing Plate
52574	Head Seal
52245	Adapter Seal
52609	Thrust Cone
52510	Locking Ring
Vessel Support for all OCTA models	
52169	Saddle
45042	Strap Assembly
46265	Strap Screw

Pentair Water
Limited Warranty

Pentair Water India Pvt. Ltd., a division of "Pentair Water" manufactures its products ("Products") and parts ("Parts") under the highest standards of workmanship using quality materials. Accordingly, Pentair Water expressly warrants these Products and Parts as follows:

WARRANTY COVERAGE

a) All the "*CodeLine*" & *"Pentair"* branded membrane housing products are warranted to the original owner to be free of defects in material and/or workmanship under normal use for a period of one (1) year from date of Invoice.

b) Any replacement Product or Part provided hereunder will be warranted against defects in material and workmanship for the unexpired portion of the one-year warranty period applicable to the goods

EXCLUSIONS FROM THIS LIMITED WARRANTY

This warranty does not cover:

1. Defects not reported to Pentair Water within the above described warranty period.
2. Any items manufactured by other companies. Such items may carry warranties offered by the original manufacturers.
3. Problems resulting from failure to comply with installation instructions or drawings, or improper installation.
4. Damage caused by acts of nature or problems resulting from abuse, misuse, negligence or accident by any party other than Pentair Water.
5. Problems resulting in whole or in part from alteration, modification or attempted repair of these Products or Parts by any party other than Pentair Water.
6. Normal wear of replaceable components, including elastomeric Seals, Spacers etc. These parts require maintenance as part of a yearly service schedule.
7. Noncompliance with applicable codes, and ordinances including without limitation, plumbing codes.
8. Damage due to chemical attack.
9. Warranty applies only to original owner at the original installation location
10. Shortages in receipt of spares/components/products not intimated to the seller within 60 days of the receipt by buyer

WARRANTY OBLIGATIONS OF PENTAIR WATER

Should a defect in workmanship and/or material in Products or Parts covered by this warranty become evident during the term of the warranty, then upon compliance with the procedures, as set forth below, Pentair Water, at its option, will: In the case of Products, issue a credit in the amount of the original purchase price of the product, or repair or replace the defective Products. Pentair Water will consider, in good faith customer preference in making a determination whether to issue a credit or repair or replace a Product. In the case of Parts, whether purchased new or exchanged on a Product by other parts, Parts may not be returned for credit or repair. Pentair Water will only be responsible for the replacement of defective parts.

PROCEDURE FOR OBTAINING WARRANTY PERFORMANCE

If the buyer discovers within this period a failure of the product to conform to specifications, or a defect in material or Workmanship, the buyer must promptly notify Pentair Water in writing. In no event may that notification be received by Pentair Water more than 30 days after the end of the warranty period. Any goods that the buyer believes to be defective are to be returned to Pentair Water factory for examination. However, upon request of the buyer, Pentair Water may, at its discretion, agree to examine the goods in the field. If, upon examination by Pentair Water, any goods sold under this agreement or purchase order do fail to conform to CodeLine / Pentair- specifications, or prove to be defective in material or workmanship, Pentair Water will supply an identical or substantially similar part F.O.B., Pentair Water factory; or Pentair Water , at its option, will repair such part or give credit to the buyer for the original cost of such goods. However, if the goods were examined in the field and Pentair Water determines that they do conform to CodeLine / Pentair- specifications, the buyer will be responsible to pay to Pentair Water, a $750 field service charge, plus travel expenses and a $750 per diem charge.

NO OTHER WARRANTIES. To the maximum extent permitted by applicable law, PENTAIR WATER DISCLAIMS ALL OTHER WARRANTIES, WHETHER EXPRESS OR IMPLIED, INCLUDING, BUT NOT LIMITED TO THE IMPLIED WARRANTIES OF MERCHANTABILITY AND FITNESS FOR A PARTICULAR PURPOSE, with regard to the Product(s), Part(s) and/or any accompanying written materials. This limited warranty gives you specific legal rights. You may have others, which vary from state/jurisdiction to state/jurisdiction.

NO LIABILITY FOR CONSEQUENTIAL DAMAGES. To the maximum extent permitted by applicable law, in no event shall Pentair Water be liable for any damages whatsoever (including without limitation, loss of time, inconvenience, expenses such as telephone calls, labor or material charges incurred in connection with the removal or replacement of the Product(s) or Part(s), special, incidental, consequential, or indirect damages for personal injury, loss of business profits, business interruption, loss of business information, or any other pecuniary loss) arising out of the use of or inability to use the defective Product(s) or Part(s), even if Pentair Water has been advised of the possibility of such damages. In any case, Pentair Water entire liability under any provision of this Limited Warranty shall be limited to the amount actually paid for the Product(s) or part(s). PLEASE NOTE: Because some states/jurisdictions do not allow the exclusion or limitation of incidental or consequential damages, the above limitation or exclusion may not apply.

WARRANTIES OR REPRESENTATIONS BY OTHERS - No dealer or other person has any authority to make any warranties or representations concerning Pentair Water or its products. Accordingly, Pentair Water is not responsible for any such warranties or representations.

OTHER RIGHTS - This warranty gives specific legal rights, and other rights may apply.

CodeLine™
Pentair Water

PENTAIR WATER REGISTRATION CARD

Vessel Model:

Date of Purchase

OEM Purchased From: (Name/ Address/Tel no.)

____
____
____
____

Treatment System wherein used:
(Please circle the relevant)

- RO
- UF
- NF
- Other

System Capacity:__________GPD

No. of Vessels: ___________

Date of Installation:____________

Name/Address/Tel & email of your Company:

____
____
____
____

Installation Site:
(Address/Country)

____
____
____
____

Serial Numbers

Numbers are located at one end of the vessel. (If you have purchased more than 64 vessels, please attach the serial nos. separately).

__________ __________ __________
__________ __________ __________
__________ __________ __________
__________ __________ __________
__________ __________ __________
__________ __________ __________
__________ __________ __________
__________ __________ __________
__________ __________ __________
__________ __________ __________
__________ __________ __________
__________ __________ __________
__________ __________ __________
__________ __________ __________
__________ __________ __________
__________ __________ __________
__________ __________ __________
__________ __________ __________
__________ __________ __________
__________ __________ __________
__________ __________ __________
__________ __________ __________

Mailing Address:
CodeLine Division
Pentair Water India Pvt. Ltd.
L/52-55, Verna Industrial Area
Verna, Goa – 403 722. INDIA
Tel: 91-832-2883300
Fax: 91-832-2883312
www.codeline.com

Thank you for purchasing a world class CodeLine vessel. To help us service you better and update you on “improvement and changes”, please fill up the above registration card and mail at the address given in the same.

Instruções do Transmissor de Vazão 8550-3 +GF+ SIGNET

PORTUGUESE

PRECAUÇÃO!

- Remova a energia da unidade antes da instalação das conexões de entrada e saída.
- Siga cuidadosamente o manual de instruções para evitar danos pessoais.

Conteúdo

1. Instalação

O transmissor está disponível em três versões: uma versão de montagem de painel, uma versão integral (montagem em tubos) e um conjunto universal para instalação perto do sensor.

1.1 Instalação do Painel

Os kits do painel de montagem são fornecidos com hardware para instalação da instrumentação dentro dos painéis e conservam o selo NEMA 4X.

1. Retire o painel e desencaixe as bordas. Recomenda-se uma folga de uma polegada entre todos os lados do instrumento.
2. Coloque a junta no instrumento e instale no painel.
3. Deslize as abraçadeiras de montagem sobre a traseira do instrumento até que o "clique-rápido" encaixe no engate do lado do instrumento.
4. Conecte os fios aos terminais.
5. Para remover, firme o instrumento temporariamente com uma fita pela frente ou aperte a traseira do instrumento. NÃO SOLTE. Pressione o "clique-rápido" para fora e remova.

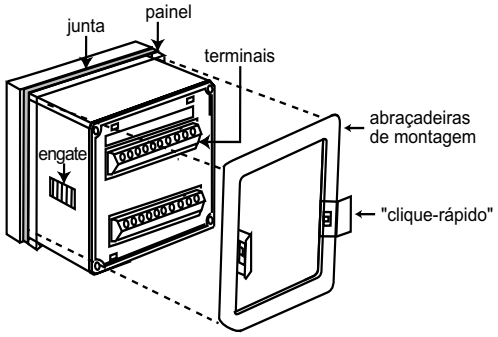

1.2 Conjunto Integral (3-8051)

1. Retire as saídas de conduíte se necessário.
2. Conecte o sensor a um adaptador integral. Empurre e torça o adaptador integral para conduzir a base e segure com uma arruela e um parafuso.
3. Monte a unidade no tubo. Dirija o cabo através da saída e conecte o transmissor.
4. Feche a unidade e trave. Sele a entrada do cabo.

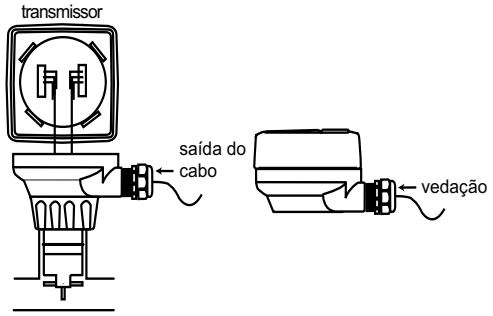

1.3 Conjunto Universal (3-8050)

1. Instale o transmissor na base.
2. Conecte os fios ao transmissor.
3. Feche a unidade e trave empurrando e torcendo.

Sele a entrada do cabo.

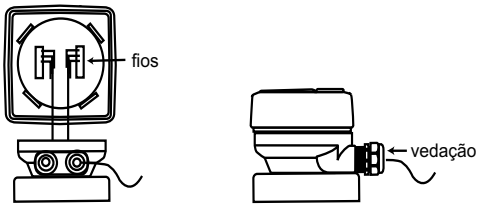

2. Especificações

Características Gerais

Compatibilidade: Todos os sensores de vazão +GF+ SIGNET com saída de freqüência
Precisão: ± 0.5 Hz
Invólucro:

- Classificação: Frontal NEMA 4X / IP65
- Material: PBT
- Display: Policarbonato revestido com Poliuretano
- Teclado: 4 teclas com vedação de borracha de silicone
- Peso: Aproximadamente 325 g

Display:

- Alfanumérico 2 x 16 LCD
- Velocidade de atualização:1 segundo
- Contraste: Selecionável pelo usuário, 5 níveis

Condições Ambientais:

Temperatura de Operação: -10 a 70 °C
Temperatura de Armazenamento: -15 a 80° C
Umidade Relativa: 0 a 95%, não-condensado

Padrão de Qualidade:

CE, CSA, UL
ISO 9001

Características Elétricas:

Entrada do Sensor:

- Faixa: 0.5 Hz a 1500 Hz
- Requisitos de Energia: 2 fios: 1,5 mA a 5 VCC ± 1%
  3 ou 4 fios: 20 mA a 5 VCC ± 1%
- Óticamente Isolado de corrente de loop
- Protegido contra curto circuito

Saída de corrente:

- 4 a 20 mA, isolada, totalmente ajustável e reversível
- Alimentação: 12 a 24 VCC ± 10 %, regulado
- Impedância máx. do loop: 50 Ω máx. a 12 V, 325 Ω máx. a 18 V, 600 Ω máx. a 24 V.
- Razão de atualização: 100 ms
- Precisão: ± 0.03 mA

Saída de Coletor Aberto: Alto, Baixo, Freqüência e Pulso Programável

- Coletor Aberto, Isolado óticamente, 50mA máx. sink, 30 VCC máx. voltagem retirada.

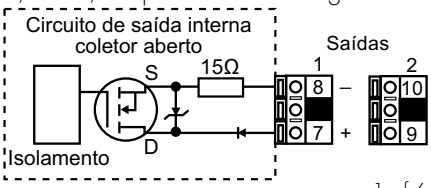

Dimensões

Painel de Montagem

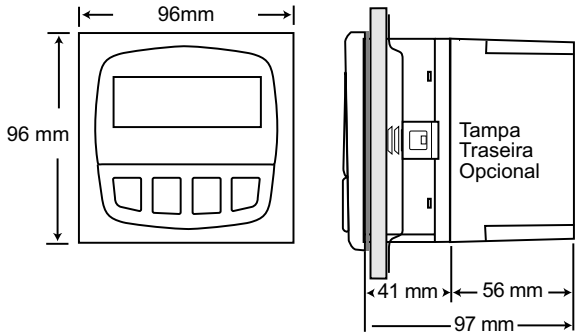

Área de Montagem

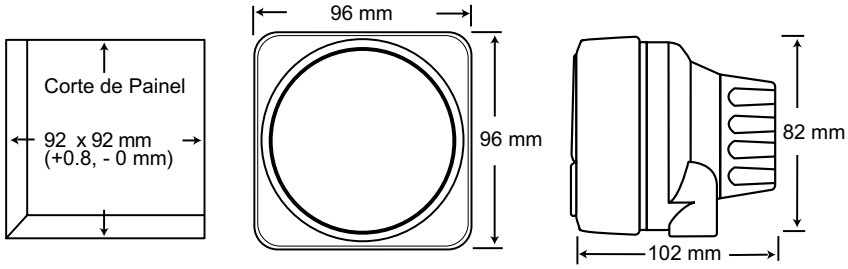

3. Conexões Elétricas

Cuidado: Deixar de abrir totalmente as garras antes da remoção dos fios pode causar danos permanentes no instrumento.

Procedimento de Instalação

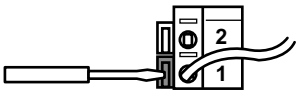

1. Remova 13 a 16 mm do isolamento na ponta do fio.
2. Pressione a alavanca laranja do terminal para baixo com uma chave de fenda pequena para abrir as garras do terminal.
3. Insira a ponta desencapada do fio (não isolado) no orifício do terminal até a sua total passagem.
4. Solte a alavanca laranja do terminal para fixar o fio no lugar. Gentilmente puxe cada fio para assegurar-se que a conexão esteja certa.

Procedimento de Retirada da Fiação
1. Pressione a alavanca laranja do terminal para baixo com uma chave de fenda pequena para abrir as garras do terminal.
2. Quando totalmente aberto retire os fios do terminal.

Terminais
1. AUX 1 + 12 a 24 VCC
2. AUX 2 -

Alimentação / Loop
3. Alimentação / Loop 1 + 12 a 24 VCC ± 5 %, força do sistema e conexões de loop de corrente.
4. Alimentação / Loop 1 - Impedância máxima do loop: 50 Ω máx. a 12 V, 600 Ω máx. a 24 V.
5. Loop 2 +
6. Loop 2 -

Saída de Coletor Aberto
7. Saída 1 + Transistor de Saída de Coletor Aberto programável como:
8. Saída 1 - • Alarme Alto e Baixo com histerésis ajustável
9. Saída 2 + • Saída de Pulso Proporcional
10. Saída 2 - • Seleção para Desligar (Off)

Entrada do Sensor / Pré-Amplificador
11. Preto (Sensor 1 V +)
12. Vermelho (Sensor 1 IN)
13. Prata (Sensor 1 Gnd)
14. Preto (Sensor 2 V +)
15. Vermelho (Sensor 2 IN)
16. Prata (Sensor 2 Gnd)

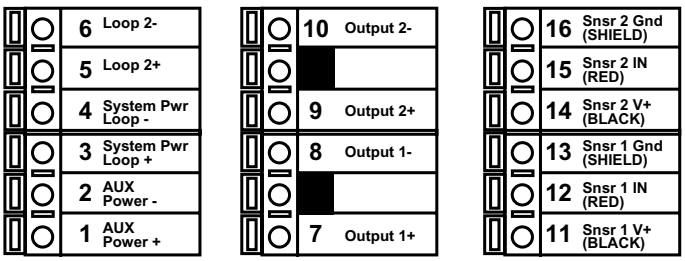

Dicas de Instalação:
- Não direcione o cabo do sensor em conduíte que contenha instalação de alimentação AC - ruídos elétricos podem interferir no sinal do sensor.
- Direcionando o cabo do sensor através de um conduíte metálicamente aterrado pode prevenir danos com umidade, ruídos elétricos e danos mecânicos.
- Vede as pontas de entrada do cabo para prevenir danos com a unidade.
- Quando colocados duas extremidades de cabos num único terminal, solde ou torça as pontas juntas.

3.1 Conexões de Alimentação / Loop

Aplicação dedicada, não há loop de corrente utilizado

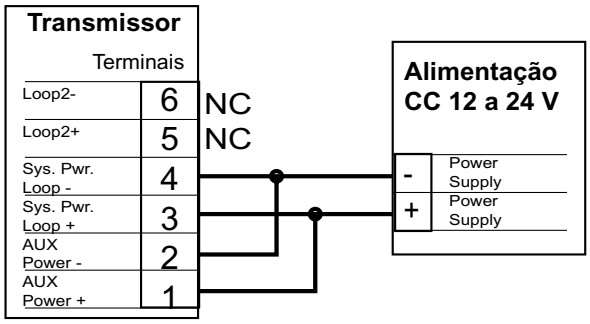

Conexão para um CLP com alimentação embutida

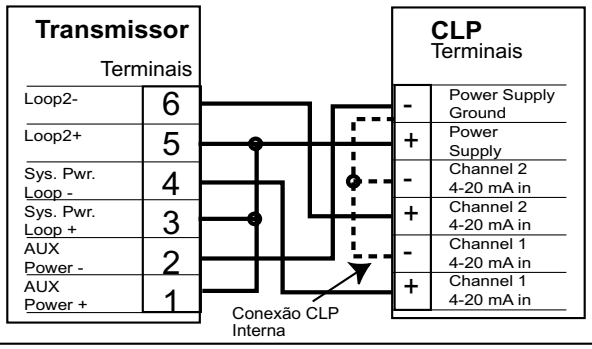

Conexão para um CLP/Registrador com alimentação separada

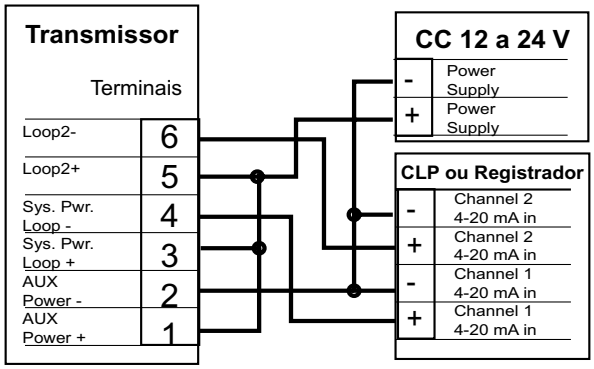

Exemplo: Dois transmissores conectados para CLP/Registrador com alimentação separada

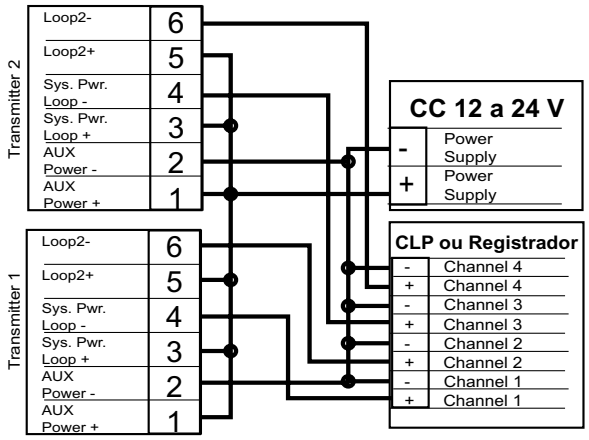

3.2 Conexões de Entrada do Sensor

Dica de Instalação:
Não direcione o cabo do sensor em conduíte que contenha instalação de alimentação AC - ruídos elétricos podem interferir no sinal do sensor.

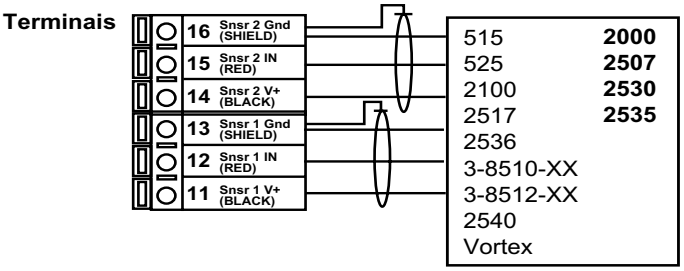

3.3 Funções de Coletor Aberto

- **Baixo (Low):** A saída dispara quando a variável do processo é menor do que o setpoint.
- **Alto (High):** A saída dispara quando a variável do processo é maior do que o setpoint.

Exemplo: No Modo de Operação Alarme Baixo, a saída torna-se ativa quando o processo cai abaixo do setpoint e torna-se inativa quando o processo sobe acima do setpoint mais a histerésis. O oposto é verdadeiro para o Modo de Alarme Alto.

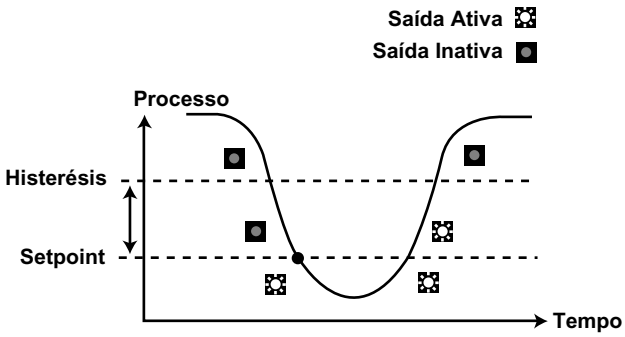

- **Desligado (Off):** Desabilita a saída de pulso.
- **Pulso (Pulse):** Sai um pulso sempre que uma quantia específica de volume for totalizada.
- **Freqüência:** Sai um pulso sempre que entrar o número dividido de pulsos.

4. Funções do Menu

Menu Vista (VIEW): é mostrado durante a operação padrão.

- Pressione os botões para CIMA ou para BAIXO para visualizar os parâmetros do processo.
- Pressione os botões para CIMA e para BAIXO ao mesmo tempo para sair de qualquer display e voltar a menu Vista.
- O display retornará ao menu Vista em 10 min., a menos que alguma tecla seja pressionada.

Menu Calibração (CALIBRATE): contem características de ajuste do display e parâmetros de saída. Um serviço de código de segurança evita o acesso não autorizado. Para acessar o menu Calibração:

- Pressione o botão ENTER por 2 segundos para mostrar: `CALIBRATE: ---- Enter Key Code`
- Pressione os botões em seqüência para CIMA, CIMA, CIMA, para BAIXO para mostrar: `CALIBRATE: XXXX Enter Key Code`

Menu Opções (OPTIONS): contem características de ajuste e display para pequenos ajustes no display ou saída de sinal. Para acessar o menu Options:

- Pressione o botão ENTER por 5 segundos para mostrar: `OPTIONS: ---- Enter Key Code`
- Pressione os botões em seqüência para CIMA, CIMA, CIMA, para BAIXO para mostrar: `OPTIONS: XXXX Enter Key Code`

Dicas para o Menu:

- O botão da direita move para a direita, da linha de cima para a linha de baixo, e permite edição quando o símbolo ">" é mostrado.
- Nos menus Calibração ou Opção, o transmissor continuará medindo e controlando as saídas. Quando > é pressionado, o valor de entrada é mantido no último valor medido do processo.
- Quando o sensor não está conectado, a unidade mostrará CHECK SENSOR e qualquer saída controlada pelo sensor será de 3,6 mA ou desligada (OFF).

Exemplo:

Para trocar data, primeiro entre no menu Calibração (pressione o botão ENTER por 2 segundos; pressione as teclas em seqüência CIMA, CIMA, CIMA, BAIXO). Quando estiver no menu Calibração, pressione o botão para CIMA uma vez.

1. O display mostra a seta para a direita

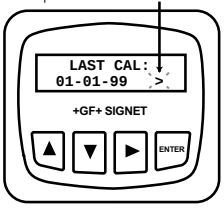

2. Pressione o botão da direita para o 01 piscar.

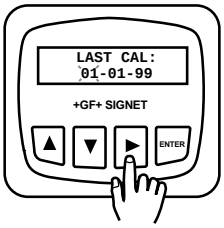

3. Pressione os botões para mover através dos números.

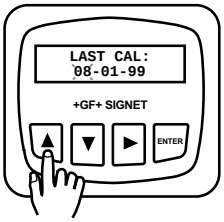

4. Pressione o botão ENTER para salvar.

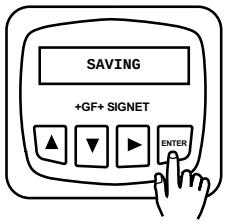

5. Agora o display lê a nova data.

Funções do Menu

Menu Vista	Faixa
Flow 1: Units Flow 2: Units	00000 - 99999
Delta Flow Units	Vazão 1 - Vazão 2(DF) positivo e negativo será mostrado
Tot 1: Tot 2: >	00000000 a 99999999
Reset Total 1	Tranca: Desligada
► Reset Total 1?	00000000
Reset Total 2	Tranca: Ligada
► Reset Total? Key Code —	▲ ▲ ▲ ▼
Repeats for Totalizer 2	
Perm 1: Total Units 1	00000000 a 99999999
Perm 2: Total Units 2	00000000 a 99999999
Loop 1 Output: mA	4 a 20 mA
Loop 2 Output: mA	4 a 20 mA
Last Cal: Date	00-00-00 to 39-39-99

Menu Calibração	Faixa	Preset
Repetir ajustes para sensor 2		
Flow 1 Units: GPM >	1, a-z, A-Z, 0-9 s,h,m,d s = segundos h = horas m = minutos d = dias	GPM
Flow 1 K-Factor: 60.000 >	0.0000 a 99999	60.00
Total 1 Units: Gallons >	a-z, A-Z, 0-9 campo para oito dígitos	Galões
Total 1 K-Factor: 60.00 >	0.0000 a 99999	60.00
Loop 1 Source: Flow 1 >	Vazão 1 Vazão 2 DF	Vazão 1
Loop 1 Range: GPM 000.00->100.00>	0.0000 a 99999	0 a 100
Loop 2 Source: Flow 2 >	Vazão 1 Vazão 2 DF	Vazão 2
Loop 2 Range: GPM 000.00->100.00>	0.0000 a 99999	0 a 100
Output 1 Source: Flow 1 >	Vazão 1 Vazão 2 DF	Vazão 1 (Saída 1) Vazão 2 (Saída 2)
Output 1 Mode: Low >	Desligado,Baixo,Alto, Pulso, Freqüência	Baixo 1 (Saída 1) Alto 2 (Saída 2)
Selecionado Baixo ou Alto		
Output 1 Setpnt: 10.0 GPM >	0.0000 a 99999	10 (Saída 1) 90 (Saída 2)
Output 1 Hys: 5.0 GPM >	0.0000 a 99999	5 gpm
Pulso Selecionado		
Output 1 Volume: 100.00 Gallons >	0.0000 a 99999	100
Output 1 Plswdth: 0.1 Seconds >	0.1 a 999.9 segundos	0.1 segundos
Freqüência		
Output 1 Freq: Divide by 1 >	1 a 254	1
Last Cal: 01-01-99	00-00-00 a 39-39-99	01-01-99

Repetir os ajustes para o Saída 2

Menu Opção	Faixa	Preset
Contrast: Level >	1 a 5	3
Flow 1 Decimal: ***.**	*.**** a *****.	****.*
Total 1 Decimal: ********.	******.** a ********.	********.
Flow 2 Decimal: ***.**	*.**** a *****.	****.*
Total 2 Decimal: ********.	******.** a ********.	********.
Averaging 1: Off >	Desligado (Off) Baixo (4 s) Alto (8 s)	Desligado
Averaging 2: Off >	Desligado (Off) Baixo (4 s) Alto (8 s)	Desligado
Total Reset: Lock Off >	Ligado Desligado	Desligado
Loop 1 Adjust: 4.00 mA >	3.8 a 5.0 mA	4.00 mA
Loop 1 Adjust: 20.00 mA >	19.0 a 21.0 mA	20 mA
Loop 2 Adjust: 4.00 mA >	3.8 a 5.0 mA	4.00 mA
Loop 2 Adjust: 20.00 mA >	19.0 a 21.0 mA	20 mA
Output 1 Active: Low >	Baixo Alto	Baixo
Output 2 Active: Low >	Baixo Alto	Baixo
Test Loop 1: >	4 a 20mA	Não Disponível
Test Loop 2: >	4 a 20mA	Não Disponível
Test Output 1: >	Ligado ou Desligado	Não Disponível
Test Output 2: >	Ligado ou Desligado	Não Disponível

Solução de Problemas

Display	Problema	Solução
——	A base de tempo do display é muito grande.	Troque a base de tempo da vazão (S = Segundos, M = Minutos, H = Horas, D = Dias) no menu CALIBRATE para um menor valor (ex. LP**H** para LP**M**).
Check settings for Output	O valor da largura do pulso é muito alta para a entrada de freqüência ou o pulso do volume é muito baixo.	Reduza o valor da largura do pulso ou aumente o valor do pulso do volume.
SETUP READ ERROR Press Any Key	Ocorreu falha na memória.	Pressione qualquer tecla para recarregar o preset, então reprograme os setpoints.

+GF+ SIGNET

Signet Scientific Company, 3401 Aerojet Avenue, El Monte, CA 91731-2882 U.S.A. • Tel. (626) 571-2770 • Fax (626) 573-2057
For Worldwide Sales and Service, visit our website: gfsignet.com • Or call (in the U.S.): (800) 854-4090

GEORGE FISCHER +GF+ Piping Systems
3-8550.090-3/(A-9/99) Portuguese

Printed in U.S.A. on Recycled Paper

8. SISTEMAS DE PURIFICAÇÃO DE ÁGUA

Statement of Qualifications

disinfection
filtration
instrumentation
bottling

2005

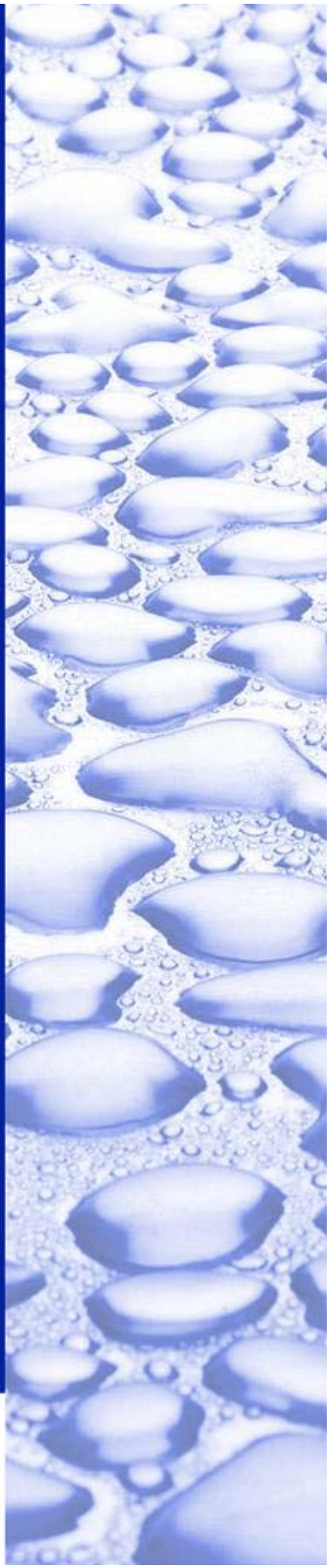

SEVERN
TRENT
SERVICES

Table of Contents

Table of Contents

Introduction

Severn Trent Services (Severn Trent) is a leading supplier of water and wastewater treatment solutions. We provide our clients with some of the industry's brightest minds, advanced technologies and quality products to provide truly efficient, cost effective solutions to water and wastewater challenges. Our broad range of products and services is concentrated around disinfection and filtration technologies, pipeline analysis, rehabilitation and repair services, contract operating services and state-of-the-art residential metering products.

There are many types of water purification applications – industrial, municipal, fresh water, salt water, potable water and wastewater. At Severn Trent, we offer the most complete line of disinfection, instrumentation and filtration equipment in the industry. Our disinfection product offering includes chlorine gas feed equipment plus a variety of alternative disinfection technologies such as ultraviolet light, chlorine dioxide, polymer feed and on-site hypochlorite generation. Our filtration technologies are just as varied and include reverse osmosis, nanofiltration, ion exchange, pretreatment/filtration, arsenic removal, aeration, precipitation, wastewater evaporators, bioreactor systems and separation technologies.

Some of our brand names include Aztec™, Capital Controls™, ClorTec™, Eclox™, EST™, MicroChem™, Semblex®, SORB 33™, TETRA DeepBed™, TETRA Denite®, TETRA SAF™, UAT™ and UltraDynamics®. The job doesn't end when the equipment is installed. At Severn Trent, our domestic and international field and factory service personnel are well trained to support Severn Trent's disinfection, instrumentation, bottling and filtration products. We have locations in:

- Fort Washington, Pennsylvania (headquarters)
- Colmar, Pennsylvania
- Pittsburgh, Pennsylvania
- Goffstown, New Hampshire
- Tampa, Florida
- Sugar Land, Texas
- Torrance, California
- Kuala Lumpur, Malaysia
- Cancun, Mexico
- Cairo, Egypt
- Bogotá, Columbia
- Minworth, United Kingdom
- Didcot, United Kingdom
- Milan, Italy
- Beijing, China

Disinfection Solutions

Severn Trent offers a variety of disinfection solutions including:

- Chemical feed system
- Chloramination
- Chlorine dioxide generation
- Gas feed systems and related products
- Chemical induction system
- Gas safety shut-down systems
- Liquid chemical chill system
- Odor, wet, dry and emergency scrubbers
- On-site sodium hypochlorite generating systems
- Ozone sterilization systems
- Polymer feed system
- Reservoir management system
- Tablet feed system
- Ultraviolet disinfection
- Venturi ejector and related products

Chemical Feed System

Severn Trent offers the Advance® PDS precision dosing system as a pre-assembled and pre-wired packaged system designed for efficient and precise chemical injection.

The system features corrosion-resistant materials for all wetted components in the single- or multiple-pump system arrangement. This versatile system – which is effective across an extensive range of applications and operating conditions – features fully integrated controls for automated system operation, alarm indication and system shutdown. Optional remote alarms for low tank level, tank mixer and shutdown are also available.

This proven accurate design and durable construction ensures low maintenance and dependable operation for the life of the equipment.

Chloramination

Severn Trent's Capital Controls™ gas feed product line provides a full line of ammonia handling equipment including vacuum-operated and pressure-operated ammonia gas feeders and vaporizers and chemical dosing pumps for ammonia-bearing compounds.

In addition, our ClorTec™ product line can be used for on-site generation of sodium hypochlorite, a chlorine equivalent, while the proprietary LiquidChem Chiller™ system allows aqueous ammonia to be used safely without any of the

difficulties commonly encountered in the chloramination process such as off-gassing and loss of feed pump prime.

Key clients include the Eastern Municipal Water District, California.

Chlorine Dioxide Generation

Severn Trent Services offers the Capital Controls™ Model T70G4000 and T70GD4000 chlorine dioxide generators to produce the disinfectant chemical using reagents in either commercially available or diluted concentrations. Both systems produce chlorine dioxide and consistently maintain a product yield greater than 95%, making it ideal for drinking water treatment.

As a two-chemical system, concentrations of hydrochloric acid and sodium chlorite are used to generate chlorine dioxide, which eliminates the use of chlorine gas. The Capital Controls Model T70G4000 uses commercially available concentrations of hydrochloric acid (32%) and sodium chlorite (25%), while the Model T70GD4000 uses diluted concentrations of the chemicals of 8.5% hydrochloric acid and 7.5% sodium chlorite, fed at a 1:1 ratio.

As all-liquid systems, the Capital Controls chlorine dioxide generators ensure the following for the life of the equipment:

- Efficient gas production
- Precise solution feeding
- Low maintenance
- Dependable operation

Both models are available with either manual or automatic control in addition to system shut-down and alarm options.

Gas Feed Systems & Related Products

Our complete line of Capital Controls™ gas feed disinfection technology comprises chlorination, dechlorination/sulfonation, ammoniation and recarbonation equipment. The line includes:

- Vacuum gas feeders (manual and automatic) with capacities up to 10,000 ppd or 200 kg/h
- Pressure gas feeder (manual/automatic) with capacities up to 1,000 ppd or 20 kg/h
- Automatic gas control valves
- Vaporizers with capacities up to 10,000 ppd or 200 kg/h
- Custom engineered systems

Capital Controls disinfection accessories include:

- Gas detectors (single and multipoint)
- Cylinder scales

- Electronic gas feed switchover units
- Disinfection controllers
- Amperometric titrators

Chemical Induction System

Severn Trent offers the Capital Controls CHLOR-A-VAC® chemical induction unit for improved chlorination/dechlorination through high efficiency mixing of gaseous or liquid chemicals with process water. Ideal for use in all-vacuum gas feed systems or to complement chemical feed pumping systems, CHLOR-A-VAC offers a full range of gaseous or liquid chemical feed rates for municipal and industrial applications. The units are available in seven capacities to meet most application requirements. Features include high efficiency mixing, reliable vacuum, heavy-duty motor, thermal overload protection, rugged design and savings on chemical cost.

Gas Safety Shut-Down Systems

Severn Trent's SafeTC™ container shutoff system provides automatic rapid closure of chlorine container valves upon contact closure from a gas detector, fire alarm, seismic, panic button or other alarm features. When using chlorine in any application, this system is ideal for protection of personnel and property. In some instances, SafeTC even replaces the need for scrubbers and containment devices.

This system is available with one to ten containers and uses nitrogen as its pneumatic source, eliminating the need for costly, high maintenance compressors. The system consists of a safety shutoff device and an electro-pneumatic control panel. Simply put, it is an easy-to-operate, maintain and service unit.

Key clients include:

- ABB SUSA Inc.
- E.L. Pipe, Inc.
- Norair Engineering Corp.
- City of Washington D.C. (Blue Plains Water Treatment Plant)
- Minera Yanacocha SRL, Lima, Peru
- Coca-Cola Enterprises
- Kraft Foods Ltd.
- Anglian Water

Liquid Chemical Chill System

Severn Trent offers the packaged LiquidChem Chiller™, which is specifically designed to chill any liquid (such as ammonia and sodium hypochlorite) when

used in municipal, commercial or industrial applications. A complete liquid chemical chill system is comprised of:

- Storage tank(s) with level sensor
- Proprietary chiller/storage system(s)
- Temperature probe
- Chiller probe
- Metering pump(s)
- Vents(s)
- PLC-based chiller and temperature control panel

Unlike similar commercially available equipment, the LiquidChem Chiller chill system is unique in that it does not require pressurized storage of liquid chemicals. Every tank is a double-contained, insulated structure and chemicals are maintained at lower temperatures so that they cannot volatize, which further stabilizes the solution. Because it maintains a stable solution and has a consistent suction head, our system provides a more accurate, uniform chemical feed process while eliminating injection pump vapor lock cavitation. Through an easy to install and operate ventilation system, the LiquidChem Chiller system is vented to release directly into the atmosphere, eliminating the possibility of check valve or vacuum relief valve failure. Off gassing can be avoided by controlling vapor pressure and ambient temperature.

The standard system comes with a 500-gallon (1,890-liter) tank. Larger systems are designed upon request.

Odor, Wet, Dry & Emergency Scrubbers

Severn Trent manufactures a complete line of industrial and municipal scrubbing systems. Our product line includes both wet and dry scrubbers for:

- Emergency gas abatement
- Odor scrubbers
- Particulate scrubbers
- Systems for industrial installations

Our complete line of EST™ emergency scrubbers is used to control fugitive emissions of chlorine or sulfur dioxide from 150-pound (68-kg.) cylinders, one-ton portable tanks and up to 90-ton (81.6-metric ton) rail cars with a caustic soda neutralizing solution. All EST systems have been full scale tested and certified to contain and neutralize a “worst case” gas leak in accordance with Uniform Fire Code Standards.

In addition to standard designs, Severn Trent offers completely custom designs to suit individual applications. Our designs can

incorporate a wide range of construction materials to handle even the most corrosive environments.

Key clients include:

- BFGoodrich
- Dow Chemicals
- E.I. DuPont
- City of Dallas, Texas
- City of Phoenix, Arizona
- Exxon/Mobil

On-Site Sodium Hypochlorite Generating Systems

Severn Trent is the market leader in the on-site generation of sodium hypochlorite from fresh water, having over 2,000 installations worldwide. Our ClorTec™ on-site sodium hypochlorite generating systems range in capacity from 2 to 3,000+ ppd (40 to 60 kg/h) of chlorine equivalent and generate a 0.8% sodium hypochlorite solution using three common consumables: salt, water and electricity. Depending on application or site-specific needs, ClorTec systems are available as skid-mounted or component-based systems. The skid-mounted systems are fully operational and generating sodium hypochlorite in less than 24 hours. ClorTec units are NSF Standard 61 approved, ETV verified and approved by the Secretary of State, UK.

Key clients include:

- City of Albuquerque, New Mexico
- City of Phoenix, Arizona
- California Water Services
- Palmdale Water District, California
- City of Fresno, California

Ozone Sterilization Systems

Severn Trent offers ozone sterilization systems, contact tanks, modules and other optional equipment through its UAT product line. Systems are designed to meet application-specific needs and can provide a dissolved ozone gas concentration of 0.2 to more than 2 ppm (m/gl). All systems are constructed of 316 stainless steel and have treatment capacities ranging from 0.5 to 8.4 pounds per day (0.23 to 3.8 kg/day) of ozone gas.

Polymer Feed System

Severn Trent offers the Semblex® line of polymer feed systems for dry polymer preparation in both

pneumatic and hydraulic conveyance systems and liquid polymer blending units. The Semblex systems are designed to feed coagulants/flocculants used in the first stage of suspended solids removal or dewatering processes.

Our Semblex Polymax Series L liquid polymer blending unit is now equipped with a programmable logic micro-controller. The system features standard pre- and post- auto-flush cycles, a built-in LCD operator interface screen and on-board diagnostics.

Key clients include:

- Foley Company
- Thamer Construction Co. (Flat Creek Wastewater Treatment Plant in Gainesville, Georgia)
- Lillard & Clark (Arvada, Colorado Water Treatment Plant)
- Dellinger, Inc., Black & Veatch (McDowell Creek Wastewater Treatment Plant in Charlotte-Mecklenburg, North Carolina)
- Hickory Construction Co.

Reservoir Management System

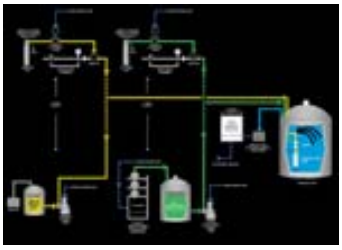

We offer the patented Reservoir Management System™ (RMS) to maintain proper residual levels in reservoirs and ground storage tanks while avoiding common problems such as thermal stratification, stagnation and blending of different water qualities.

The RMS is compact and operates independent of reservoir level, input flows or output flows and is simple to install. The system is an economical solution to:

- Manage, maintain and control residual levels across varying municipal, commercial and industrial applications
- Optimize water quality
- Reducing costs and energy consumption
- Maintaining full system capacity

Key clients include the Moulton Miguel Water District, California.

Tablet Feed System

The ClorTab™ High Volume Pressure Tablet Feeder system safely and quickly produces a consistent solution strength of equivalent hypochlorite with output capacities up to 120 ppd (2.3 kg/h) at 0.9 wt% or 5.0 wt% solution. The system operates on a batch configuration, which ensures a consistent solution strength and allows for continuous dosing. This system also:

- Reduces excessive hypochlorite residual, keeping chemical costs to a minimum
- Minimizes operator service time
- Ensures a quick response during peak demand periods

The optimal construction of the dissolver tube height reduces handling and promotes safer operation of the system. Loading of the dissolve feeder requires that tablet loading be done in batches that match industry standard tablet packaged weights of 50- and 100-pound containers. Benefits of this approach include:

- Simple loading process
- Minimal operator handling
- Extended tablet shelf life by eliminating storage of partially filled tablet containers

Severn Trent also offers a full line of chemical disinfection and dechlorination products for smaller disinfection applications. These products include:

- Aquaward® NSF-approved calcium hypochlorite tablets for potable water disinfection
- Sanuril® wastewater disinfection tablets
- D-Chlor™ patented dechlorination tablets
- Erosion tablet feeders specifically designed for dispensing our chemical tablets

Ultraviolet Disinfection

Our UltraDynamics® line of low pressure, standard output and low pressure, high output UV disinfection equipment covers the complete spectrum of applications:

- Open channel wastewater
- Commercial (potable and wastewater)
- Light, general and heavy industrial
- Ultrapure water
- Custom engineered products and services

Key clients include:

- Millipore Corporation
- Consolidated Engineering

- PureFlow
- Metito
- Pure H20 Technology
- US Filter

Venturi Ejector & Related Products

Severn Trent offers a variety of EST venturi ejector products and other process equipment. We supply individual ejector components as well as completely engineered packages that incorporate pumps, valves, piping and instrumentation. Our product line includes:

- Solid conveyors
- Eductors and siphons
- Tank mixing eductors
- Desuperheaters
- Vacuum systems
- Exhausters
- Compressors and heaters

Filtration Solutions

Severn Trent offers a variety of filtration solutions including:

- Arsenic removal
- Biofiltration
- Bioreactor systems
- Deep bed filtration
- Fixed film denitrification
- Ion exchange
- Membrane filtration
- Precipitation technology
- Underdrain blocks
- Vacuum distillation
- Wastewater evaporators

Arsenic Removal

Severn Trent's SORB 33™ process can reduce arsenic levels to below 3µg/L across a complete range of drinking water systems. This simple and economical SORB 33 technology uses Bayoxide® E33 ferric oxide media, developed and produced for Severn Trent by Lanxess (formerly Bayer AG). (Bayoxide E33 is a registered trademark of Bayer AG.)With a high capacity for arsenic, the media is long lasting and can be disposed of in a regular landfill when it is exhausted. The SORB 33 process is proven effective in full-scale plants and Severn Trent guarantees performance. Wastewater treatment solutions for multiple metals removal are also available.

Key clients include:

- United Utilities
- Severn Trent Water (16 sites)
- City of Rio Rancho, New Mexico
- USEPA National Arsenic Treatment Demonstration Project
  - Anthony, New Mexico
  - Nambe Pueblo, New Mexico
  - Brown City, Michigan
  - Stevensville, Maryland
  - Rim Rock, Arizona
  - Rollinsford, New Hampshire

BioFiltration

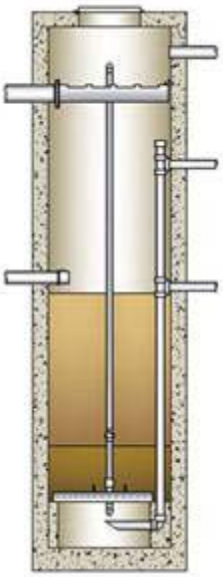

Severn Trent offers the TETRA Amphidrome™ batch process, a biological wastewater treatment system for applications that require treatment including removal of:

- BOD
- Ammonium ion
- Suspended solids
- Nitrate-nitrogen

The system is a fixed film sequencing batch biological filter. The performance of the deep bed Amphidrome is guaranteed to produce an effluent that meets or surpasses regulatory standards.

The major benefits of this system are that it allows a wastewater treatment installation in nitrogen sensitive areas where a conventional system may not be allowed. It also allows for a significant reduction in leaching area, which can significantly lower the cost of a system that may require mounding.

BioReactor Systems

Severn Trent's TETRA ColOX™ system is an advanced aerobic biological treatment system that combines the best elements of activated sludge processes (suspended growth) and trickling filter systems (attached growth/fixed film) with innovative design features to achieve superior performance. Configured as a submerged packed bed reactor, the ColOX system utilizes both fixed film and suspended growth biomass, offering greater efficiency, operational reliability and versatility than any other aerobic biological treatment process.

Key clients include:

- Welsh Water, UK
- Froghall Water Reclamation Works, UK
- Rock-Tenn Company, Pennsylvania
- A.K. Steel, Kentucky
- Formosa Plastics, Taiwan

Severn Trent also offers the TETRA SAF™ submerged aerated biological reactor for the oxidation of CBOD and ammonium in wastewater treatment applications. In the treatment process, wastewater and process air are fed in through the bottom of the reactor and flow upward through a bed of course media. Microorganisms grow on the media and biologically remove undesirable constituents in the wastewater.

The media is supported by the patented TETRA "T" Blocks™ and the process air is fed through a nozzleless lateral system constructed of stainless steel. The Tetra underdrain and air distribution system is highly effective in

distributing air and water. Because it has no moving parts and is made of durable construction materials, TETRA SAF underdrain provides many years of trouble-free operation.

Deep Bed Filtration

Severn Trent offers the TETRA DeepBed™ tertiary filters to successfully produce quality advanced wastewater treatment plant effluents. The complete product line includes application-specific engineered gravity, pressure and modular filters and pre-assembled gravity deep bed filters.

Key clients include:

- Hillsborough County, Florida
- Sarasota County, Florida
- City of Tampa, Florida
- City of Atlanta, Georgia
- Jefferson County, Alabama

Fixed Film Denitrification

Severn Trent's TETRA Denite® system combines the denitrification and filtration processes for superior performance in wastewater treatment applications.

The specially sized and shaped media used in the TETRA fixed-film biological reactors is an excellent support for denitrifiers and the deep bed environment is conducive to very efficient nitrate-nitrogen (NO_3-N) removal. With TETRA Denite systems, the denitrification process and the filtration process are combined in a single system and provide superior process synergism.

Key clients include:

- South Cross Bayou, Florida
- Kanapaha Wastewater Treatment Plant, Gainesville, Florida
- City of Tampa, Florida
- Fuji Electric Co., Ltd., Japan

Ion Exchange

Severn Trent offers the TETRA Higgins Loop™, a continuous countercurrent ion exchange contactor for liquid phase separations of ionic components using solid ion exchange resins. The Higgins Loop contactor is a vertical cylindrical loop containing a packed bed of I-X resin that is separated into four operating zones by butterfly or "loop" valves that function like four separate vessels: adsorption, regeneration, backwashing and pulsing.

Benefits of the Higgins Loop include:

- Efficiently utilizes the resin capacity
- Uses less regenerant and fresh water
- Generates consistent product quality
- Minimizes wastewater volumes

The technology offers greatly expanded ranges for the use of ion exchange resins and adsorbents in commercial separations.

Key clients include EMIT Technologies, Wyoming.

Membrane Filtration

As a leading developer and manufacturer of ultrafiltration, nanofiltration and reverse osmosis membrane filtration systems, Severn Trent has the solution to meet tap, brackish or seawater needs. We offer systems for a variety of small-to-large municipal, commercial and industrial applications. Our systems can treat 100 GPD (15.1 m^3/h) up to 10 MGD (1,500 m^3/h). We combine U.S.-manufactured quality and proven reliability with in-house experience designing, building and installing systems worldwide.

Key clients include:

- Egyptian Fertilizer Company, Egypt
- RSEA Engineering Corporation, Tong In Island, Taiwan
- City of Naples, Florida
- Leo J. Vander Lans Water Treatment Facility in Long Beach, California (part of the Las Alamitos Barrier Recycled Water Project of the Water Replenishment District of Southern California)
- Hyatt Regency, Mexico

Precipitation Technology

Severn Trent offers the TETRA High Density Solids (HDS) ™ system to precipitate solids that are denser than conventional sludge particles and have increased water repellent characteristics. As a result, this process results in greatly improved solids dewatering rates.

HDS precipitation technology is a proven method to remove heavy metals, fluorides and salts from the following process streams and separate them into low moisture-bearing sludge:

- Smelter dusts and acid plants blow down
- Electrolyte bleeds and wastewaters

- Fluoride etchant and chemical wastes
- Acid mine drainage
- Selective metals recovery

Underdrain Blocks

Severn Trent offers a wide variety of underdrain filters: TETRA "U" Block™, TETRA "LP" Block™ and TETRA "T" Block. Each has a proven design that provides superior distribution for both water and air (separately or concurrently). All three are popular for:

- Lightweight construction
- Easy assembly that ensures a tight fit
- Long, maintenance-free life
- Low head loss
- Easy adaptation into a new or old filter design application

Key clients include:

- Illinois American Water Co.
- Forsyth County, Georgia
- Reynosa, Mexico
- Iowa City, Iowa
- Draper Water Treatment Plant, Oklahoma City, Oklahoma

Vacuum Distillation

For situations where a closed-loop approach to wastewater management is required, there is no better solution than Severn Trent's Samsco WasteSaver™ evaporator system. The WasteSaver system:

- Allows the recovery of valuable chemistry
- Handles large volumes
- Provides greater efficiencies
- Permits large scale processing in a small, factory-assembled package

The WasteSaver evaporator allows users to reclaim and reuse chemicals, recover and reuse process waters and reduce waste where concentrated chemicals cannot be reused. WasteSaver also ensures reliability, repeatability and reassurance, as the unit will operate consistently at peak performance with virtually no maintenance.

Clearly one of the most practical, effective and affordable methods of chemical wastewater management available today, the WasteSaver evaporator helps achieve zero liquid discharge (ZLD) by permitting the recovery and reuse of both chemicals and water, which results in substantial savings. In fact, WasteSaver systems typically pay for themselves in one to two years.

Key clients include:

- Nucor Steel
- Roll Coaters
- Grub & Ellis

Wastewater Evaporators

The Samsco Water Evaporator II™ (SENTRY SYSTEM) provides disposal and recycling solutions by vaporizing up to 99% of water-based wastes. These units greatly reduce hauling volume by performing economical on-site treatment of metalworking fluids (lubricants, surface preparation cleaners, etc.), food/beverage vat rinses, process waste, compressor condensates and the like – including some hazardous wastes.

Fail-safe and redundant sensor safety packages combine in an elegantly simple way to allow unattended operation with high user confidence. New features in the SWE-II include:

- Optional condensers
- Auto-drain and auto-oil-overflow
- Improved foam control
- Alarm history memory
- Context-sensitive help screens
- Greater resistance to harsh environments
- Many user-selectable automatic options such as automatic pH control and antifoam injection

Remote telemonitoring is also available.

Key clients include:

- Alcan Aluminum Ltd.
- Nucor Steel
- Baxter Healthcare Corporation
- Arvin Roll Coaters
- IBM

Bottling Solutions

Severn Trent offers a variety of bottling solutions including:

- Automatic decappers
- Automatic sleeve applicators
- Bottling systems
- Cap elevators
- Ink jet coders
- Leak testers
- Mineral injection systems
- Motorized bottle conveyors
- Rack loaders/unloaders
- Sniffers
- Small bottle PET equipment

Automatic Decappers

Our automatic decapper will automatically detect if an empty returned polycarbonate bottle has a snap-on cap on it. If a cap is detected, it will automatically stop the bottle and remove the cap. The removed cap will automatically be discarded through a cap chute into a customer-supplied container or garbage can.

The decapper will also adjust automatically to three- or five-gallon (11.4- or 18.9-liter) polycarbonate bottles of any height.

Automatic Sleeve Applicators

Severn Trent offers a state-of-the-art automatic sleeve applicator machine that features PLC controls with a full step-by-step display. This easy-to-operate machine places a plastic sleeve automatically on each bottle cap for a guaranteed fresh, tamper-resistant product.

Bottling Systems

Severn Trent manufacturers a complete line of three-, five- and six-gallon glass or polycarbonate and PET bottling systems. We offer washers, fillers, cappers, conveyors, robotics and every other component to meet a client's bottling needs. We also offer turnkey bottling solutions that include plant design, installation and water treatment systems.

Designed primarily for startup bottling operations, BabyWorks™ features an output capacity of 60, 200 or 300 bottles per hour and will automatically wash, sanitize, rinse, fill and cap five-gallon (18.9-liter) bottles. Its compact size and automatic operation easily allow one person to operate the entire process.

The heart of the complete WaterWorks™ turnkey bottling concept is a fully automatic system that will pre-wash, wash, sanitize, rinse, fill and cap three-, five- and six-gallon (11.4-, 18.9- and 22.7-liter) bottles at speeds up to 3,000

bottles per hour. Severn Trent's commitment to providing the finest quality and service can be seen throughout the system – from the high quality, heavy-duty stainless steel construction to the safe design, oversized tanks and pumps down to the seamless welds used at every juncture.

Key clients include:

- Perrier Group, USA
- Suntory Water Group, USA
- Pepsi-Gemex, Mexico
- Coca-Cola, India and Mexico
- Danone, USA and Mexico
- Nestlé, Russia
- Albayan, United Arab Emirates

The automatic washer, filler and capper is the heart of the complete UAT WaterWorks' and BabyWorks' turnkey bottling concepts offered by Severn Trent. The machines represent state-of-the-art design, engineering and manufacturing qualities. Designed for the bottled water industry, this is a fully automatic system that will pre-wash, wash, sanitize, rinse, fill, and cap three-, five- and six-gallon bottles at speeds up to 3,000 bottles per hour.

Cap Elevators

Using compressed air, our Hi-Kap automatically elevates non-spill, snap-on caps to the filler cap hopper. For the bottler, this can mean dramatic savings in time and money. The Hi-Kap will:

- Reduce labor costs
- Increase productivity
- Reduce down time
- Increase workplace safety by eliminating the need for dangerous ladders near the equipment

The Hi-Kap can accommodate up to 3,000 caps, which are easily loaded into the built-in, stainless steel hopper. Once loaded, a helicoid screw to the air chamber conveys these caps. At this stage, compressed air – controlled by sophisticated sensors and high-speed air pumps – moves the caps to the filler cap hopper. The machine is operated with an easy-to-use control panel and automatically notifies the operator when the cap bin is getting low.

Ink Jet Coders

Severn Trent's ink jet coders will automatically spray a one- or two-line code onto the side of the filled and capped bottles.

Leak Testers

Severn Trent's fully automatic leak tester stops, inspects and tests all returned empty bottles for possible leaks and automatically discards defective bottles – prior to the start of the washing cycle.

Mineral Injection Systems

Our mineral injectors automatically add up to three different minerals into the processed water. The added minerals may include potassium, calcium, magnesium or fluoride in any combination.

The mineral injection systems are available in one-, three- or four-tank configurations that include automatic dosing pumps, static mixers and TDS meters to monitor the final product.

Motorized Bottle Conveyors

Severn Trent manufactures 10-foot and 20-foot motorized bottle conveyors that conveniently transport bottles throughout the various sections of the bottling equipment. The longer conveyors can be configured to utilize our WaterWorks PLC control panel to adjust variable frequency drives and bottle speed.

For easy exterior maintenance and sanitation, the conveyors' components (including the belts) are constructed from heavy duty stainless steel, which make them extremely quiet – even at full operation

Rack Loaders/Unloaders

Severn Trent's robotic rack loader/unloader automatically unloads empty three- or five-gallon (11.4- or 18.9-liter) polycarbonate bottles from industry racks and reloads the full clean, capped bottles onto the same industry-standard racks. Different sizes and speeds are available.

Sniffers

Severn Trent offers a full line of sniffers designed to detect various impurities in the treated water prior to the start of the wash cycle.

Small Bottle PET Equipment

The PET Series provides a wide range of rinsing, filling and capping equipment for the intermediate capacity beverage industry (ranging from 0.5 liter to 1 gallon). This monobloc rinser, filler and capper is designed to process non-returnable bottles at speeds that range from 30 to 440 bottles per minute. The system features:

- Extremely low or adjustable consumption of counter pressure gas
- Improvement in microbiology filling conditions
- CIP system with better flooding and circulation of cleaning solutions

Instrumentation Solutions

Severn Trent offers a variety of instrumentation solutions including:

- Controllers
- Gas detectors
- Portable water quality assessment systems
- Residual analyzers
- Water and wastewater quality monitors

Controllers

Severn Trent's controller can take a chlorine residual signal, a flow signal or both to effect excellent, smooth and responsive control of chlorine dosing. Additionally, "feed forward and feed back" chlorine analyzers can be used in conjunction with a flow input to provide very refined control of the chlorination process.

Our CAPTROL® Model 1450 is a microprocessor-based and designed to control chemical feed in water and wastewater applications.

Standard features of the CAPTROL Model 1450 controller include:

- Three chlorination and two dechlorination control modes
- Built-in multiplier for feed forward dechlorination control
- Automatic transfer from compound loop control when residual or flow signal is lost
- Bumpless transfer between manual and automatic control
- Digital displays
- Alarm indicators and contacts
- Control switch inputs
- Gas flow output signals

The controller can be configured in the field for:

- Chlorination – Flow proportioning, residual or compound loop control
- Dechlorination – Flow proportioning or feed forward control using the built-in multiplier

Residual control is accomplished by a single-mode integral control loop with adjustable process lag time.

Our CAPTROL® Model 1451 controller is uniquely suited to control schemes using two inputs such as disinfection, oxidation and water quality monitoring and control. Standard output provides a 4-20mA signal to control broad of chemical

feed applications. Microprocessor-based digital electronics and digital alphanumeric displays simplify setup and operation.

Gas Detectors

The Capital Controls Series 1600 gas detectors have become the industry standard in many countries. This is due in part to the excellent sensor elements, which can last upwards of five years without maintenance or replacement. The range is designed to suit varied requirements for sophistication. The Series 1610B is an analog detector for a single point monitoring. It has an LED bar graph to provide operators with a display of up to 10ppm chlorine. A multipoint version, Series 1620B, is also available and can monitor up to eight chlorine or sulfur dioxide sensors in any combination.

The Capital Controls 17CA3000 is an advanced microprocessor-based gas leak detector capable of detecting chlorine or sulfur dioxide gas at concentrations down to 0.1 ppm. Configurable concentration alarms are available for instantaneous, time weighted average (TWA), short-term exposure limit (STEL) and custom functions. Configurations are flexible and allow up to four sensors in any combination of chlorine or sulfur dioxide gas sensors.

Portable Water Quality Assessment Systems

The revolutionary Eclox™ Rapid Response Water Test System and the Eclox Water Test Kit from Severn Trent are rapid and portable field water quality assessment systems. They quickly detect intentional or accidental contamination of water for civilian or military applications.

Eclox Rapid Response Water Test System

The Eclox Rapid Response Water Test System is a rapid, portable field water quality assessment system used in civilian or military applications to detect intentional or accidental contamination of water. This tough, portable and easy to use system can be utilized to test for phenols, heavy metals, cyanide, pesticides and arsenic – even for nerve agents and numerous other contaminants. The system uses chemiluminescence and other specific test methods.

The Eclox Rapid Response Water Test System is used by militaries and municipalities around the world.

Eclox Water Test Kit

The Eclox Water Test Kit uses a luminometer to determine water toxicity, with results in as little as four minutes. The kits include a luminometer and associated equipment required for chemiluminescence testing. Pesticide/nerve agent test strips are available as an option.

The kits are used in applications that include environmental monitoring and mapping, industrial site evaluation and discharge analysis, water treatment and security monitoring and wastewater strength evaluation. Kit features include:

- Rapid detection of contaminated water
- Reliable indicator of relative water quality
- Easy to use with minimal training
- Chemically hard and de-contaminable
- Replacement consumables packs with a two-year shelf life available
- Use in a wide range of environmental conditions
- Low weight to be carried by one person
- Downloadable data for an auditable record
- Sensitive to heavy metals, poisons and chemical warfare agents
- Usable in full NBC protective clothing

Residual Analyzers

Severn Trent has been a leader in continuous chlorine residual analysis for more than 20 years. Using proven amperometric technology, Severn Trent has a complete offering of chlorine analyzers that provide accurate residual analysis for a wide range of monitoring and control applications.

The effective but simple design at the heart of each instrument is a central gold and outer copper electrode assembly, which can be used with a third reference electrode to measure ppb levels and determine chlorine residual levels in sample water. The electrode surfaces are kept clean by PVC cleaning spheres driven in spatial motion by a striker assembly style.

Our new line of residual analyzers are designed to continuously monitor free or total chlorine or other oxidants in drinking water, wastewater, cooling water and other process water applications. The units are microprocessor-based and feature a large, dot matrix graphic display, on-screen instruction and automatic ranging.

Details of Severn Trent's various residual analyzer systems include:

Series CL500 Residual Analyzer	• Resolution up to 0.001 mg/l • Standard with six adjustable alarm relays • Features dot matrix graphical display • 2% accuracy
Series CL1000 Residual Analyzer	• Unique three-electrode measuring cell arrangement that enables it to measure in the parts per billion (ppb) residual range, as well as high residual ranges to 60 mg/l • Standard with six adjustable alarm relays • Features dot matrix graphical display • 1% accuracy
Series 1870E Chlorine Analyzer	• Originally designed for wastewater applications with large flow areas and cell surfaces • Continuously analyzes free or total chlorine, chlorine dioxide, iodine, bromines or other oxidants for water, wastewater, cooling water and other process water applications • Features a field-selectable monitoring range of 0-0.1 to 0-20 mg/l • Provides highly accurate low-level readings • 1% accuracy
Series 1770 Chlorine Analyzer	• Designed for use with clean, stable pH waters (works on the same principle as the 1870E) • Simplicity and target application reduce the need for a buffer reagent making it even more cost efficient, both to buy and to own • 5% accuracy
MicroChem2 Transmitter/ Controller	• Can be configured as a transmitter, feed forward controller, swimming pool controller or aeration basin controller • Up to three measurements can be connected in any combination of chlorine (free and total), chlorine dioxide, fluoride, ozone, pH, ORP, temperature (PT100) and analog 4-20mA (ammonia and nitrate measurements pending)

Water & Wastewater Quality Monitors

The Aztec™ Series 1000 water quality monitors employ ion-selective electrode (ISE) and colorimetric technologies to measure various parameters found in water and wastewater treatment processes including aluminum, ammonia, color, fluoride, iron, nitrate, nitrite, manganese, phosphate or silica. The monitors are easily configured, self-calibrating and auto ranging.

The Aztec™ Series 5000 is truly automatic self-cleaning and self-calibrating dissolved oxygen (DO) and mixed liquor suspended solids (MLSS) meter. This is a highly automated aeration basin monitoring system with built-in data logging and remote communications that is capable of single, dual or combined measurements.

Severn Trent De Nora

Severn Trent De Nora's patented electrochlorination technology – which converts seawater into sodium hypochlorite (NaOCl) – has served in electric power electrochlorination, reining, petrochemical, offshore drilling and production, marine and municipal applications worldwide. We offer electrochlorination systems for water and wastewater disinfection.

Omnipure™ electrochlorination systems are the only marine sewage systems that oxidize sewage in the electrochemical cell while producing NaOCl. The United States Coast Guard and the International Maritime Organization certify each unit in the product line. Our patented electrolytic treatment process offers a superior long-term solution to offshore wastewater treatment. Omnipure units are built to endure the harsh offshore environment. With Omnipure, there are no contaminated screens to clean, chemicals to add or microorganisms to maintain. Omnipure is ideal for:

- Cruise ships
- Ferries
- Tugboats
- Workboats
- Merchant vessels
- Carrier
- Ocean cruisers
- Production platforms
- Navy ships
- Drilling rigs
- Tankers

Sanilec® hypochlorite generation systems from seawater are skid-mounted, custom designed systems. These units provide reliable and economic operation for marine and offshore platform applications including:

- Fire water loops on offshore facilities
- Biofouling control for general marine applications
- Water flood for oil and gas production
- Cooling water disinfection
- Ballast water treatment

Seaclor® on-site hypochlorite generation systems from seawater demonstrate reliable and economic operation in numerous installations throughout the world.

Key clients include:

- Halliburton, Kellogg Brown & Root
- Transocean Sedco Forex
- Toshiba
- Samsung/Siemens
- Petrobras
- Qatar Petroleum
- Rigdon Marine

About the Severn Trent Organization

Severn Trent's water treatment solutions come with an unlimited supply of experience:

- Technologies that make sure water is free of contamination
- Pipelines that serve homes, businesses and industries
- Equipment that processes water and wastewater on ships at sea
- Desalination and reuse technologies that bring potable water to the desert
- Environmentally conscientious watershed management
- People, processes and advanced technologies that ensure municipal and industrial water is always safe and available

More than 600 industrial, private and municipal facilities nationwide rely on our expertise to protect their investment, maximize system efficiencies and operate cost-effectively and in full regulatory compliance.

In communities around the world, we own and operate facilities that serve the homes, businesses and towns of our employees and neighbors – making for a record of good citizenship. Our customers benefit from a global research initiative and the operational best practices of decades of customer installations worldwide – all backed by a commitment to high quality service and continuous technological improvement.

Severn Trent Plc

Severn Trent Services is a member of the Severn Trent Plc group of companies (London:SVT.L), which is based in Birmingham, England. Severn Trent was formed in 1974 as a regional, state-owned water authority in the UK's midlands region. The company is responsible for water management and supply and wastewater treatment and disposal in the catchment areas of two of Britain's greatest rivers – the Severn and the Trent. It was from these rivers that it took its name.

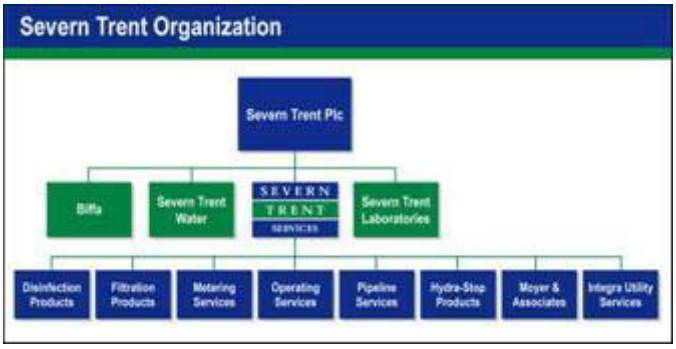

Today, Severn Trent has developed and diversified from a water authority into an international environmental services company with four divisions: Severn Trent Services, Severn Trent Water, Severn Trent Laboratories and Biffa Waste Services. The Severn Trent Plc group comprises one of the largest water and wastewater treatment utility companies in the world, operating nearly 2,500 facilities and serving more than 20 million customers worldwide. It operates in the UK, the U.S. and Europe, employs almost 14,000 people and generated sales last year of approximately $2.4 billion.

Following privatization from the UK government in 1989, Severn Trent set out on a path to build a products and services business in the U.S. beginning with the acquisition of the Capital Controls Company in 1990. Since that time, more than 50 acquisitions have been integrated into one company – Severn Trent Services. Severn Trent Services has built a comprehensive portfolio of products designed to analyze, treat, measure, deliver and protect our valuable water resources.

Severn Trent Services

Severn Trent Services has a global presence and is a $600 million business employing nearly 5,000 personnel providing water and wastewater equipment and services to communities and industrial customers around the world. With its global headquarters in Fort Washington, Pennsylvania, USA, Severn Trent Services has 76 locations in the United States and a total of 90 offices throughout the world including Egypt, Italy, Malaysia, Mexico and the United Kingdom. The organization has grown its U.S. business through acquisitions and organic growth and features a score of companies across eight divisions.

Severn Trent Services is an associate member of the American Water Works Association, the Water Environment Federation, the Water Partnership Council and the Water and Wastewater Equipment Manufacturers Association.

Related Severn Trent Services Offerings

Operating Services

Severn Trent Services is one of the largest water and wastewater service firms in the United States. Our 1,000-plus professionals are responsible for nearly 400 contracts that encompass more than 500 water and wastewater facilities. In operating, maintaining, servicing and managing public service facilities, Severn Trent has become recognized as a leader in providing cost-effective operations while ensuring the highest level of service and regulatory compliance.

Severn Trent has provided contract operations services in the U.S. continuously for more than 25 years. Initially incorporated in 1974 in Texas under the name AM-TEX Corporation, the company began operating as Severn Trent Environmental Services in 1991 after acquiring the contract operations business of PSC Environmental Services from Philadelphia Suburban Corporation. Since that time, Severn Trent has maintained its presence in the United States and has expanded its operations through additional acquisitions and business development activities.

We currently provide contract operations for municipal and industrial clients in 19 states and continue to grow to service additional states each year. Our

projects, which span the United States from the Atlantic to the Pacific oceans, include varied combinations of the following services:

- Water and wastewater treatment
- Wastewater collection and water distribution
- Meter reading and installation
- Billing and collections
- Sludge disposal
- System rehabilitation
- Asset management

Pipeline Services

Severn Trent offers expert water distribution and sewer collection system analysis, specialty pipeline and structure rehabilitation and line stopping. We specialize in the collection and analysis of accurate information about the efficiency of existing water and sewer systems. Our clients are typically small and large municipalities, but we also perform similar work for industrial clients. Our engineers and field technicians work closely with client representatives to help them solve flow, pressure and leakage problems in their systems. Severn Trent is often called upon as a subcontractor to other firms because of the specialized work that we perform.

Our pipeline experience dates back to 1896, the year in which Pitometer Associates, Inc. (now part of the Severn Trent organization) was founded. Severn Trent has continued to build upon Pitometer's reputation for providing quality pipeline services to local communities in a manner that makes doing business easy. Our combination of quality, service, regulatory knowledge and local focus is the reason we have been around for more than a century. As a result, Severn Trent has become the industry leader in local water distribution and sewer collection system solutions. We began providing these services under the Severn Trent name in 1997.

Severn Trent performs a wide range of sewer system investigations to optimize all aspects of hydraulic performance including:

- Flow metering
- Smoke testing
- Manhole and physical inspection
- Flow isolation
- Line cleaning and TV inspection
- System mapping and records review
- Rehabilitation recommendations

We offer a full complement of technology and resources necessary to solve a community's water distribution system needs including:

- Comprehensive water audits
- Water system hydraulic modeling
- Master planning
- Water quality modeling
- Consumption analysis
- Master meter tests
- Meter accuracy tests
- Loss of head Hazen-Williams "C" value tests
- Fire flow tests
- Pump efficiency tests
- Hydraulic gradient line measurements
- Valve exercising

The critical data resulting from Severn Trent's field investigation studies help focus resources on the pipes that should be upgraded, maintained, repaired or replaced. Our repair and rehabilitation services include:

- Manhole, tank and vault waterproofing
- Cementitious spray lining
- Chemical grouting
- Air Scouring
- Pipe lining
- Valve replacement/repair
- Valve exercising
- Pipe tapping
- Unidirectional flushing
- Line stopping

Severn Trent has the philosophy, experienced personnel and equipment that are unequaled in the industry. This is evidenced by the fact that Severn Trent has performed more than 8,000 pipeline services projects in 32 countries. Our reputation for quality work is supported by the high degree of repeat clients that we have had over the years.

Hydra-Stop Products

Severn Trent offers the Hydra-Stop line of equipment that includes:

- Hydra-Tapper – A lightweight, rugged and durable hot tapping machine that makes pressure taps on gas or water lines quick and easy. At only 50 pounds, the Hydra-Tapper requires only one operator and less blocking and bracing. Hydra-Tapper works on any type of pipe.

- Hydra-Stopper – A line stopping system that eliminates costly and dangerous distribution system shut-downs. For water or gas, Hydra-Stopper significantly reduces labor, which results in lower repair costs. Two workers using this unique stopping system can stop the flow in a repair area and replace components in less than half the time required for conventional methods – without customer outages.
- Insta-Valve – A highly reliable, easily inserted valve that eliminates many of the problems commonly associated with valve insertion (complicated planning and coordination, service disruptions, pipe strength loss and large excavations). The Insta-Valve system works with existing Hydra-Stop equipment or as a stand-alone system.
- Hydra-Turn – A battery-operated, hydraulic valve-turning machine that allows a single operator to do the work of a three- or four-person crew. Hydra-Turn's unique design transfers torque to the ground, instead of the worker. It can be used on or off a trailer.
- Valve/Hydrant Tracker – Allows users to track their valve inspections and maintenance procedures. The Valve Tracker is a computerized, hand-held scanner that allows users to gather, store, retrieve and edit critical valve information. All information can be entered into a computerized database to update valve information automatically. The Hydrant Tracker and Valve Tracker eliminate the guesswork about hydrant and valve identification, location, valve normal position and current status.

In addition to equipment sales, we offer contract services for line sizes four inches and up.

Metering Services

The most advanced line of residential water meters in the industry is available only from Severn Trent Services.

Its SmartMeter™ represents the state of the art in flow measurement with no moving parts to wear or jam. As a result, the SmartMeter:

- Is unaffected by grit or particulates
- Does not measure air
- Remains accurate over its lifetime
- Outlasts mechanical meters
- Brings smart technology to a metering system

With complete out-of-the-box AMR connectivity, SmartMeter provides a platform on which to tailor the most efficient AMR solution.

Other "Smart" metering products include:

- SmartReader™, a truly universal, all-in-one meter reading device
- Universal SmartPads that simplify purchasing and installation in mixed-meter systems
- SmartRoute data management solutions

In concert with our marketing partners, Severn Trent can provide niche solutions to existing metering systems or complete, state-of-the-art system upgrades.

Moyer & Associates

Severn Trent provides a broad range of services to community development districts including:

- Management – Planning, budgeting, overseeing district operations and maintenance, utility billing, payroll, collections, staffing, establishing and implementing policies
- Minutes and Records – Maintaining and managing district records, minutes, resolutions, contracts and agreements
- Accounting – Budget management, general ledger, reporting, cash management and revenue reporting
- Special Assessment Financings – Assisting with development and implementation of financial strategies and long-term debt issuance (bonds), levying and collecting non-ad valorem assessments on and off the county tax roll

Integra Utility Services

Based in the UK, Integra provides a complete metering installation service and manages customer service, property survey and after-sales service on behalf of utility providers. In addition, Integra provides other outsourcing services to utilities and industrial/domestic customers such as strategic meter installation, boundary box installation, water use audits, energy optimization consulting and much more.

One of the most experienced operators in the field, the Integra group has managed well over half a million installations since 1996.

Other Severn Trent Offerings

Severn Trent Laboratories

Severn Trent Laboratories (STL) is the largest environmental laboratory company in the world with revenues in excess of $200 million and 30 laboratories in 20 states nationwide. These facilities have the combined experience of more than 500 years in the environmental testing business.

Through continued investment in facilities, equipment, methods and people, STL has developed an unprecedented team of resources, experience and capabilities. With more than 2,000 chemists, microbiologists and environmental scientists, STL is well positioned to support a variety of clients including commercial, governmental and chemical industries.

STL's testing capabilities include chemical, physical and biological analyses of a variety of matrices, including aqueous, solid, drinking water, waste, tissue, air and saline/estuarine samples. Specialty capabilities include air toxics testing, mixed waste testing, tissue preparation and analysis, aquatic toxicology, dioxin/furan testing and microscopy

STL understands the essence of all great laboratories. It is a certain intangible energy that manifests itself in entrepreneurial spirit, pride and commitment. This energy is locally based and runs deep; down to the bench chemical level. It translates into unique service delivered at a superior level. Sometimes when small companies become part of larger organizations this energy and creativity dissipates. STL manages its laboratories such that this energy is preserved, and, in fact, increased in the setting of a larger organization.

Capabilities & Services

All STL facilities are centers of excellence – but each for a slightly different set of task areas. STL's facilities serve different markets and provide different capabilities. This allows STL to meet all the demands of the environmental decision makers that we support.

STL understands that scientifically sound, legally defensible analytical data is one of the most critical elements for the success of an environmental project. To ensure a project's data quality objectives are met, STL provides a superior standard of service using the latest technological advances and commitment to customer service.

STL provides complete cradle-to-grave services, from initial preplanning and consultation, to project management and implementation, to final results and sample disposal.

STL performs analyses under various regulatory programs using both published and laboratory developed and validated test methods. In support of these activities, STL is certified/qualified in 50 states including Washington D.C. and Puerto Rico and participates in several federal programs.

STL's standard services include organic analyses using a variety of GC, GC/MS and HPLC test methods and inorganic analyses using a variety of ICP, Trace ICP, ICP/MS, Cold Vapor AA and Graphite Furnace AA methods. STL also provides a full range of wet chemistry analyses for nutrients, BOD, COD and virtually all other general chemistry parameters.

Biffa

Biffa is the largest single supplier of integrated waste services in the UK. Through its collection, landfill and special waste treatment activities, it collects, treats and disposes of municipal and industrial waste nationally.

Now handling approximately 10% of the UK's waste, Biffa offers waste services to industry, commerce, retail customers and the health and public sectors. Its three operating divisions cover the spectrum from collection to sorting, recycling, treatment and ultimately disposal of non-hazardous and hazardous waste streams.

The company also manages the UK's second largest packaging compliance scheme (Biffpack) and has one of the most respected landfill tax credit schemes (Biffaward).

Biffa operates three main divisions:

- Collection/Municipal – Biffa collects and handles most waste streams and ensures safe transportation of wastes ranging from light commercial wastes such as paper and card to heavy or bulky waste streams such as soil. On the recycling side, Biffa is part of a national UK recycling chain and has both its own paper and glass reprocessing plants as well as alliances with major reprocessors. Biffa's objective is to recover and recycle wherever possible rather than to simply dispose of waste to landfill. Biffa also operate Biffpack, the company's tailor made compliance scheme helping companies meet their Producer Responsibility Obligations (Packaging Waste) Regulations 1997.
- Special Waste – The Special Waste division has a broad ranging capability in both bulk liquid and drummed wastes that require treatment. Both inorganic streams and organic wastewaters can be treated in group. The division has also developed a range of industrial cleaning and drainage services that has the scope to cover both dry and wet wastes. The division further offers both consultancy and design/engineering services for landfill gas management, power generation and leachate treatment. Biffa also operate Backtrack, a service that helps companies recover and recycle small quantities of dangerous and hazardous waste.
- Landfill – Biffa offers a network of landfill sites and transfer stations spread across the UK that are licensed to handle a variety of waste streams. Linked to this are resource recovery services where brick, concrete, sand and soils are being screened, graded and offered back to the market place as a product. Biffa's landfill disposal sites are monitored to high environmental standards to ensure that pollutants do not adversely impact on the environment. Many of Biffa's operations have been regenerated to provide recreational facilities and green belt areas. Biffa was also the first waste company to achieve the EMAS environmental and quality standard for a landfill site at Redhill, Surrey.

Biffa moved into Belgium in 1988 and, through a development program of organic growth, Biffa Belgium now operates collection centers, special waste and landfill facilities, positioning the firm as one of the leading waste management

companies in Belgium. Biffa Belgium provides a range of services to domestic, industrial and commercial customers and employs more than 400 staff.

Biffa has 50 municipal contracts with 26 local authorities and handles more than seven million tons of waste per year. The company includes:

- More than 1,000 collection vehicles
- More than 60 operating depots
- Three waste treatment centers, six special waste transfer stations, three industrial services centers and 100 tankers
- 33 landfill sites
- Six paper processing plants and one glass processing plant

Severn Trent Services • 580 Virginia Drive, Suite 300 • Fort Washington, PA 19034
Toll-free 800 375 0119 • Tel 215 646 9201 • Fax 215 283 3487 • www.severntrentservices.com

SEVERN TRENT

soluciones para purificar agua

SEVERN
TRENT
SERVICES

Para cualquier problemática relacionada con aguas, la solución es Severn Trent.

Cuando se requiera de tratamientos para agua potable o para aguas residuales en cualquier parte del mundo, cuente con la compañía SEVERN TRENT SERVICES para obtener soluciones innovadoras y suficientemente probadas. La razón es que SEVERN TRENT cuenta con algunas de las mentes más brillantes, tecnologías avanzadas, productos de calidad y una amplia experiencia para afrontar toda la problemática relacionada con aguas, alrededor del mundo.

Este folleto muestra la flexibilidad que mantiene SEVERN TRENT al ofrecer soluciones eficientes y costos adecuados a los problemas relacionados con la purificación de agua, ya sea agua dulce, agua salobre o agua de mar, así como en lo relacionado con el tratamiento de aguas potables y aguas residuales o servidas.

SEVERN TRENT ofrece la línea más completa en tecnologías de desinfección, filtración, instrumentación y embotellado. Es probable que al leer este folleto reconozca una o más de las marcas que se manejan tales como Aztec™, Capital Controls™, ClorTec™, Eclox™, EST™, MicroChem™, Semblex®, SORB33™, TETRA DeepBed™, TETRA Denite®, TETRA SAF™, UAT™ and Ultradynamics®.

Los equipos que suministra SEVERN TRENT no solo cumplen con estándares mundiales sino que además la compañía cuenta con la calidad de las mentes que trabajan en ella, con la experiencia de más de 25 años a través de cada continente y con la satisfacción de miles de clientes en las áreas gubernamental, industrial , de servicio y comerciales.

Desinfección

Dosificadores de químicos

Generadores de dióxido de cloro

Sistemas dosificadores de gases y productos relacionados

Sistemas de enfriamiento de químicos líquidos

Sistemas de dosificación de tabletas

Sistemas de desinfección por ultravioleta

Sistemas para preparar y dosificar polímeros

Sistema de generación en sitio de hipoclorito de sodio

Sistemas de manejo de residual y recirculación en tanques

Sistemas lavadores en seco y húmedos para partículas, líquidos olores y en casos de emergencia por fuga de gases

Eyectores tipo venturi y productos relacionados

Filtración

Sistemas para remoción de arsénico

Sistemas de biofiltración

Sistemas de bioreactores

Sistemas de filtración de lecho profundo

Sistemas de filtración por membrana

Bloques para filtración en subdrenajes o falsos fondos

Sistemas de tecnología por floculación

Sistemas de destilación al vacío

Evaporadores para aguas residuales

Sistemas de desnitrificación de película fija

Instrumentación

Controladores

Analizadores de residual

Detectores de gas

Monitores de calidad de las aguas

Sistemas para el aseguramiento de la calidad de las aguas potables

Embotelladoras

Destapadoras automáticas

Aplicadores automáticos des mangas o bandas de seguridad

Sistemas de embotelladoras

Elevadores de tapas

Probadores de fugas

Equipos embotelladores para botella pequeña fabricada en PET

Sistemas de inyección de minerales

Líneas transportadoras de garrafones

Sistemas de esterilización por ozono

Cargadores/descargadores de garrafones

Detectores de olor y codificadores por inyección de tinta

Desinfección.

Soluciones integradas para suministrar agua con calidad.

Problemática:

El encontrar la tecnología de desinfección adecuada para tratar la fuente de agua potable o el punto de origen de aguas residuales con un amplio rango de impurezas, puede ser una tarea complicada. La meta de cualquier proceso es asegurar la salud pública. Con tantas opciones de tratamiento disponibles en el mercado es importante encontrar la más adecuada. Así que surge la pregunta de ¿con quién se debe hacer contacto para conseguir la solución ideal? Con **Severn Trent Services**.

Solución:

La mayoría de las opciones de tratamiento de agua para desinfección se basan en factores tales como seguridad, manejo, facilidad de operación, durabilidad del equipo, cantidad de desecho generado, el tamaño necesario del sistema y la inversión de capital. Es vital entonces que se trabaje con una organización, que conozca como diseñar e integrar las tecnologías de desinfección basadas en el criterio específico del cliente.

Afortunadamente, **Severn Trent** pone su experiencia global y conocimientos técnicos al servicio de cada cliente para que comprenda las fortalezas y debilidades de cada solución propuesta y conjuntamente determinar la tecnología para cada necesidad.

El amplio conjunto de tecnologías para tratamiento de aguas potables y de aguas residuales que ofrece **Severn Trent** para aplicaciones industriales y municipales incluyen la desinfección por medio de la dosificación de gases, desinfección a través de ultravioleta, sistemas de dosificación de químicos, sistemas de dosificación por tabletas, sistemas de generación en sitio de hipoclorito de sodio y otras. Así que, en la búsqueda de un proveedor confiable de soluciones de desinfección múltiple, **Severn Trent** es la selección perfecta.

Desinfección.

Con un amplio conjunto de tecnologías para desinfección de aguas potables y para el tratamiento de aguas residuales, **Severn Trent** encuentra la solución correcta para cualquier aplicación industrial y municipal.

Sistemas de Dosificación de Químicos

El sistema preciso de dosificación **Advance® PDS** es un sistema pre-ensamblado y pre-cableado. Los componentes que estarán en contacto con líquidos son construidos con materiales resistentes a la corrosión, bajo con arreglos con bombas unitarias o múltiples. Poseen sistemas de controles integrados para adecuarse a un amplio rango de condiciones de aplicaciones y operaciones, y lograr alcanzar así una dosificación eficiente.

Sistemas de Generacion de Dióxido de Cloro

Los generadores de dióxido de cloro de **Capital Controls™ Modelo T70G4000 y T7GD4000**, producen o generan este químico desinfectante, ya sea usando reactivos tal como se encuentran comercialmente o en concentraciones diluidas. Ambos sistemas producen dióxido de cloro y mantienen consistentemente un producto con un rendimiento mayor al 95%, haciéndole ideal para un sistema de tratamiento de aguas potables. También para uso en sistemas y torres de enfriamiento en aplicaciones industriales.

Sistema de Dosificadores de Gases & Productos Relacionados

Las tecnologías de desinfección de **Capital Controls™** por medio de la dosificación con gases incluyen la cloración, decloración, sulfatación y dosificación de amoníaco. La línea incluye los dosificadores de gas al vacío, desde 1 a 10.000 ppd (200 Kg/h), dosificadores de gases a presión hasta 1.000 ppd (20 Kg/h), válvulas automáticas de control de gas, vaporizadores hasta 10.000 ppd (200 Kg/h) y sistemas fabricados a la medida o necesidad del cliente.

El sistema **Chlor-A-Vac®** ofrece mejoras en la cloración y decloración. Dicha mejora es a través de la mezcla o difusión, con una alta eficiencia de los químicos gaseosos o líquidos en las aguas de proceso. Este sistema, con siete capacidades, es ideal para ser usado en todos los sistemas de dosificación de gases al vacío o como un complemento del sistema de bombeo para la dosificación de químicos, a lo largo de una variedad de aplicaciones industriales y municipales.

El sistema de cierre de recipientes **SafeTC™**, provee un cierre rápido automático de la válvula del recipiente de cloro, a través de cierre por contacto del detector de gas, alarma de fuego, sensor sísmico, botón de pánico, etc. El sistema está disponible para uno y hasta ocho recipientes. Usa nitrógeno como fuente neumática, eliminando el alto costo de mantenimiento de compresores.

Sistemas de Enfriamiento de Líquidos Químicos

El sistema **LiquidChem Chiller™** está diseñado para enfriar líquidos químicos, tales como amoníaco e hipoclorito de sodio, evitando las dificultades comúnmente asociadas con su uso. Las fugas de gases pueden ser evitadas controlando la presión de vapor y la temperatura ambiente. El sistema normalmente viene con un tanque de 500 galones (1.890 litros) y los sistemas más grandes son diseñados por pedido.

Lavadores Húmedos y Secos para control de olores y en casos de emergencia por fugas de gases

Los sistemas lavadores industriales y municipales **EST™** incluyen los lavadores húmedos y los secos para lavar gases durante emergencias, así como para eliminar olores y partículas suspendidas. Los lavadores EST son usados para controlar las emisiones en caso de fugas de cloro o de dióxido de azufre de los cilindros de 150 lb. (68 Kg.) y de los tanques de 1 hasta 81.6 toneladas métricas

Sistemas de Generación en Sitio de Hipoclorito de Sodio

El sistema de generación en sitio **ClorTec™** utiliza sal, agua y electricidad para producir hipoclorito de sodio con capacidades de 2 a 3.000+ ppd (0.9 –1.361 Kg/día) como cloro equivalente. Los sistemas están disponibles instalados en estructuras portátiles o en componentes que se adecuan a la configuración del requerimiento específico de aplicación o del cliente. Las unidades ClorTec poseen certificación NSF 61, verificación ETV y son aprobadas por la Secretaría de Estado del Reino Unido.

Sistemas para Preparación y Dosificación de Polímeros

La linea **Semblex®** de sistemas de mezclado de polímeros secos y líquidos está diseñado para alimentar coagulantes/floculantes usados en la primera etapa de remoción de sólidos suspendidos o en el proceso de desaguado de lodos. La unidad de líquido esta equipada con un micro-controlador. El sistema normal está provisto de un ciclo de pre y post lavado en forma automática. Una pantalla de interfase operadora va empotrada en el LCD con un tablero de diagnóstico.

Sistemas del Manejo de Residual y Recirculación en los Tanques

El sistema **ClorTec™ RMS** es utilizado para manejar, mantener y controlar los niveles de residuales y la recirculación en los tanques de almacenamiento en aplicaciones municipales, comerciales e industriales. El sistema RMS es compacto y está compuesto por mezcladores, analizadores y controles PLC. Es un sistema que opera de forma independiente al nivel del tanque, al flujo de entrada y al flujo de salida. Es muy sencillo de instalar y operar.

Sistema de Dosificación de Tabletas

Los productos para desinfección y para decloración en aplicaciones de sistemas pequeños, incluyen los dosificadores de tabletas por erosión. Las tabletas **AQUAWARD®** de Hipoclorito de Calcio, con aprobación NSF para la desinfección de agua potable, Tabletas **SANURIL®** de Hipoclorito de Calcio para la desinfección de agua residual y las Tabletas Patentadas **D-CHLOR™** de Sulfito de Sodio para la decloración de aguas.

El sistema dosificador a presión de tabletas de alto volumen **ClorTab™**, produce en forma rápida y segura un suministro de 24 horas de una solución de hipoclorito equivalente, con capacidades de salida hasta 120 ppd (2.3 Kg/h), con una solución 0.9 % o 5.0 % en peso. La operación del sistema es semi-continua y la solución desinfectante generada de acuerdo a demanda, permite una dosificación continua.

Sistema de Desinfección por Luz Ultravioleta

Los equipos Ultravioleta a baja presión con salida alta o normal marca **UltraDynamics®** incluyen equipos tipo canal abierto para aguas residuales y cerrados para aplicaciones comerciales, así como los ligeros/generales/pesados para aplicaciones industriales. Se suministran equipos para agua ultra pura y productos fabricados bajo requerimientos del cliente.

Eyector Venturi & Producto Relacionados

La línea de productos **EST™** incluyen los eyectores tipo venturi y equipos de proceso, incluyendo bandas transportadoras de sólidos, sifones, eductores mezcladores en tanques, supercalentadores, sistemas de vacío, extractores de aire, compresores y calentadores, los cuales pueden ser suministrados o fabricados completamente en forma de sistemas tipo paquete.

Filtración.

Tecnologías de Filtración con Membranas.

Problemática:

La mayor parte de nuestro planeta es agua, pero una mayor proporción es agua de mar, la cual no puede ser utilizada directamente por el hombre. Esto es así, hasta que se toma en cuenta la tecnología y experiencia de **Severn Trent** en filtración con membranas.

Solución:

Como diseñador y fabricante líder en el mundo de sistemas de filtración con membranas, Severn Trent ofrece soluciones para cubrir las necesidades de filtrado de agua de la llave, agua salobre y agua de mar. Se ofrecen sistemas de ultrafiltración, nanofiltración y ósmosis inversa para una variedad de aplicaciones municipales, comerciales e industriales pequeñas y grandes, con capacidades hasta de 10,000 G/D (1.577 m3/h). Combinamos la calidad y confiabilidad probada de los fabricantes de USA con la experiencia propia del diseño y de la construcción e instalación de sistemas alrededor del mundo.

Foto cortesía de las Distrito de Reposición de Agua del Sur de California.

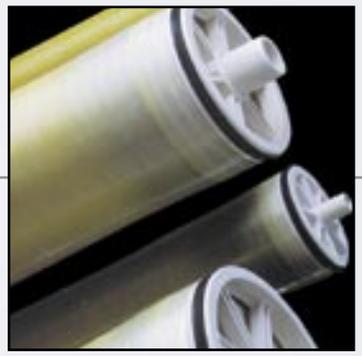

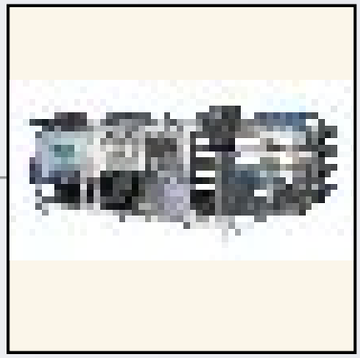

Filtración.

La solución simple para la remoción del arsénico.

Problemática:

El arsénico es peligroso cuando se encuentra en el agua potable. Con frecuencia, este elemento aparece en forma natural por su presencia en la corteza terrestre. La remoción de arsénico nunca había sido tan importante, ni tan sencilla como hasta ahora.

Solución:

Con una década de experiencia en la remoción de arsénico, **Severn Trent Services** ofrece una solución simple para resolver este problema. El sistema SORB 33™ utiliza el Bayoxide® E33, un poderoso medio filtrante granulado seco, hecho de óxido de hierro, el cual fue desarrollado específicamente para la remoción de arsénico. Este sistema es de bajo costo de inversión, su operación es sencilla y el medio filtrante agotado es fácil de remover para su deposición. Los sistemas SORB 33 son diseñados bajo varios tamaños o capacidades para adecuarse a cualquier tasa de flujo. De esta forma, los pozos de los grandes municipios y/o de pequeños pueblos se adecuan a este sencillo proceso de remoción de arsénico, con costos muy asequibles, beneficiando a todos los consumidores.

El Bayoxide® E33 es una marca registrada de Bayer, AG.

Efectiva Filtración de Lecho Profundo

Problemática:

Con la demanda creciente de agua potable alrededor del mundo, el reutilizar el agua residual en forma segura y efectiva se va haciendo imprescindible.

Solución:

La filtración terciaria avanzada es el proceso aceptable para producir un efluente de agua de calidad suficiente como para ser reutilizada en procesos industriales, en parques, para riego en el campo y para uso en plantas de generación de energía. Para poder cumplir con los estrictos permisos para descargar al medio ambiente o para recarga de mantos acuíferos, los filtros terciarios TETRA DeepBed™ de **Severn Trent** Services satisfacen la necesidad y se adaptan a su presupuesto.

Filtración.

Desde los eficientes equipos para la remoción de arsénico, hasta las soluciones por evaporación y desde la ósmosis inversa hasta la filtración de lecho profundo, **Severn Trent Services** posee la tecnología que cubre todas las necesidades de filtración, ofreciendo soluciones probadas con un valor excelente.

Sistemas de Remoción de Arsénico

La simple y económica tecnología **SORB 33™** utiliza el medio filtrante absorbente Bayoxide® E33, el cual se basa en óxido de hierro. Con esta tecnología y sistema se logran reducir los niveles de arsénico por debajo de 10µg/L (10 ppb), para un amplio rango de aplicaciones de agua potable. También se dispone de soluciones para la remoción de múltiples metales en el tratamiento de aguas residuales.

Sistemas de Biofiltración

El proceso por lotes **TETRA Anphidrome™** es un sistema de tratamiento biológico de aguas residuales para la remoción de la Demanda de Oxígeno Biológico (DBO), iones de amonio, sólidos suspendidos y nitrógeno de nitratos. El funcionamiento del sistema Anphidrome está garantizado para producir un efluente que cumple con los valores mínimos de la norma e inclusive mejorando dichos valores.

Sistemas Birreactores

El sistema **TETRA ColOX™** es un tratamiento biológico aerobio avanzado que combina elementos del sistema del lodo activado o procesos de crecimiento suspendido, y filtros por goteo o de crecimiento por sistemas de película fija, con características de diseño innovadoras para lograr una eficiencia superior.

El reactor biológico aireado sumergido **TETRA SAF™** es usado para la remoción de demanda biológica de oxígeno compuesto y del amoníaco en aplicaciones de tratamiento de aguas residuales. Durante el tratamiento, el aire de proceso y el agua residual se alimentan por el fondo del reactor, así que ambos fluyen hacia arriba a través de un lecho grueso.

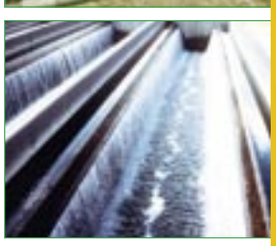

Sistemas de Filtración de Lecho Profundo

Los filtros terciarios **TETRA DeepBed™** producen en forma avanzada y exitosa efluentes con alta calidad en las plantas de tratamiento de aguas residuales. La línea de producto completa incluye aplicaciones por gravedad con ingeniería específica, filtros modulares y a presión y filtros de lecho profundo por gravedad, pre-ensamblados

Sistemas de Desnitrificación de Película Fija

Los sistemas **TETRA Denite®** combinan la desnitrificación y los procesos de filtración por sinergia en un proceso superior en aplicaciones de tratamiento de aguas residuales. El contacto entre el residuo y la biomasa es excelente. En los casos en que llegue a existir cualquier corto circuito hidráulico, este es de poco impacto en el proceso.

Sistemas de Intercambio Iónico

Los sistemas **TETRA Higgins Loop™** ofrecen una columna de intercambio iónico a contracorriente para la separación de los componentes iónicos de la fase líquida usando resinas específicas. El sistema utiliza eficientemente la capacidad de la resina, efectuando menos regeneraciones y por lo tanto consumiendo menos agua limpia. Este sistema genera una calidad de producto consistente, minimizando los volúmenes de agua residual.

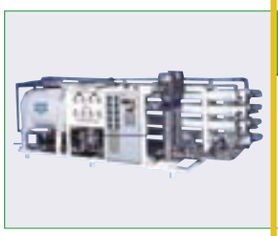

Sistemas de Filtración por Membranas

Los sistemas de **Ultrafiltración, Nanofiltración** y **Osmosis Inversa UAT™**, son ideales para filtrar agua de la llave, agua salobre y agua de mar. Se ofrecen para adecuarse a una amplia variedad de aplicaciones municipales pequeñas y grandes, comerciales e industriales. Los sistemas UAT tratan capacidades desde 100 GPD (15 l/h) hasta 10 MGD (1500 m^3/h).

Bloques Modulares para Subdrenajes o Falsos Fondos de Filtros

Los bloques **TETRA "LP"™, TETRA "T"™** y **TETRA "U"**, para los subdrenajes o falsos fondos de los filtros poseen un diseño que provee una distribución superior del agua y aire, en forma separada o conjunta.

Sistemas de Tecnología de Floculación

A través de la utilización de los **Sistemas TETRA High Density Solids (HDS)™**, se obtienen importantes mejoras en las tasas de remoción de sólidos de las aguas. El método probado HDS permite precipitar metales pesados, fluoruros y sales de una corriente de proceso y separarlos formando un lodo con bajo contenido de agua.

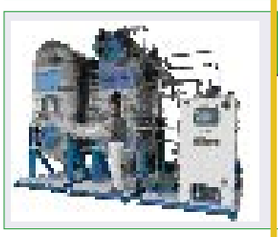

Sistemas de Destilación al Vacío

El sistema de evaporación **SAMSCO WasteSaver™**, provee una solución al problema de los residuos industriales, eliminando totalmente la descarga de desechos industriales, reduciendo los costos de tratamiento de aguas residuales, recobrando destilados de alta pureza y permitiendo la reutilización de químicos en casos específicos. El diseño de doble efecto usa la energía dos veces, resultando en una reducción de los costos operacionales, los cuales pueden llegar a ser la mitad de otros diseños alternativos en el mercado.

Evaporadores de Aguas Residuales

El **Evaporador de Agua SAMSCO II™ (SISTEMA SENTRY)**, provee soluciones para la disposición y recirculación logrando evaporar hasta el 99% del agua residual. Estas unidades eliminan la descarga de residuos minimizando el costo por transporte de sólidos residuales, usando una sencilla operación de una sola etapa.

Instrumentación.

La detección inmediata no es por accidente.

Problemática:

Con el incremento del terrorismo, expandiéndose en el globo, es esencial considerar la producción y protección del agua potable. Cuando las vidas están en la mira, ya sea en el hogar o en una batalla, no se pueden cometer errores.

Solución:

Severn Trent es el orgulloso innovador y creador de los sistemas Eclox™ para efectuar pruebas de aguas comunitarias, ya sea almacenadas o en movimiento. La tecnología Eclox utiliza la luminosidad química, o lo que es lo mismo, el monto de luz generado por productos químicos cuando se combinan con el agua, para determinar así en forma rápida la dureza del agua. Utilizando el Sistema de Respuesta Rápida Eclox, pueden identificarse rápida, fácil y económicamente productos químicos provenientes de residuos humanos, fenoles, aminas, metales pesados, cianuro, cloro, pesticidas, y aún gas mostaza, así como productos que atacan el sistema nervioso. Para cumplir con los ordenamientos de la Organización del Tratado del Atlántico Norte (OTAN), el Sistema de Prueba de Agua con Respuesta Rápida Eclox es utilizado por las fuerzas armadas del Reino Unido para resguardarse de riesgos asociados con contaminaciones e identificar rápidamente la mejor fuente disponible de agua potable y el mejor proceso de purificación.

Instrumentación.

Desde detectores de gases hasta sistemas de aseguramiento de la calidad del agua, **Severn Trent** provee lo necesario para medir y controlar automáticamente los parámetros críticos que afectan los procesos de tratamiento de aguas potables y residuales municipales e industriales. Con los rangos de limpieza automática que contienen los instrumentos analíticos, se cuenta con una operación confiable aún en los medios más agresivos para el proceso del tratamiento.

Controladores

Los controladores **Captrol® 1450** y **1451** se basan en microprocesadores, diseñados para la dosificación de químicos en las aplicaciones para aguas potable y aguas residuales. Las mejoras principales incluyen tres modos de cloración y dos de decloración, control avanzado de dosificación, transferencia automática de lazo compuesto, transferencia sin burbujas entre un sistema de control manual y automático, despliegue digital e indicadores de alarma.

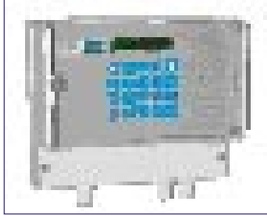

Detectores de Gases

Los detectores de fugas de gas cloro y dióxido de azufre **Capital Controls™ 17CA3000** se basan en microprocesadores que detectan concentraciones tan bajas como 0.1 ppm. Cuenta con alarma de reacción instantánea, basada en tiempos promedio (TWA) y de límites de exposición de corto tiempo (STEL). Las funciones se establecen de acuerdo al gusto del cliente. Su flexible configuración permite combinaciones hasta con cuatro sensores.

Los detectores analógicos **Series 1610B** y **1620B** monitorean y detectan la presencia de gas cloro y dióxido de azufre a través de uno o varios puntos.. El sensor está diseñado para detectar rápidamente la presencia de gas y para volver a condiciones originales después que el gas se ha despejado y se han eliminado las falsas alarmas causadas por interferencia de gases o condiciones ambientales. El detector de gas Serie 1620B de multipuntos provee una detección continua de gas cloro y dióxido de azufre hasta en ocho localizaciones o puntos distintos.

Sistemas para el Aseguramiento de la Calidad del Agua Potable

El **Sistema Eclox™ de Respuesta Rápida** para evaluación de aguas es un sistema rápido y portátil que permite asegurar en el campo la calidad del agua bajo condiciones de contaminación accidentales o intencionales, en aplicaciones civiles y militares. Este sistema resistente, portátil y de fácil uso puede utilizarse para probar la presencia de fenoles, metales pesados, cianuro, pesticidas, arsénico, agentes nerviosos y numerosos otros contaminantes. El sistema trabaja con luminiscencia química y otros métodos específicos de pruebas.

El **Kit de Pruebas de Aguas Eclox™** utiliza un luminómetro para determinar los resultados de toxicidad del agua en menos de 4 minutos. El Kit incluye un luminómetro y los equipos asociados requeridos para las pruebas de luminiscencia. Las tiras para pruebas de pesticidas, gas mostaza y agentes que afectan el sistema nervioso están disponibles como una opción. Sus aplicaciones incluyen monitoreos ambientales, análisis de descargas industriales y monitoreos de seguridad de las aguas.

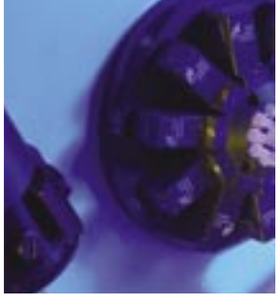

Analizadores de Residuales

El analizador de cloro **Serie 1870E** continuamente analiza el cloro libre o total, dióxido de cloro, yodo, bromo y otros oxidantes en aplicaciones de agua potable, aguas servidas o usadas, aguas de enfriamiento, y otras aguas de procesos. El sistema posee rangos de monitoreo que se pueden seleccionar en el campo, de 0·0.01 a 0·20 mg/l y provee altas precisiones en lecturas con niveles bajos.

El analizador de cloro **Serie 1770** trabaja bajo el mismo principio que el 1870E, pero está diseñado para ser usado en aguas limpias, con pH estable. Su simplicidad y aplicaciones demarcadas reducen la necesidad del uso de reactivos, generando costos más bajos, tanto en su compra como en su operación.

Los analizadores de cloro **Serie CL500** y **CL1000** se basan en microprocesadores y proveen una operación continua en línea para medir el cloro libre o total, y otros oxidantes en aguas potables, aguas servidas o usadas, y aguas de proceso. Estas unidades contienen en forma estándar seis relevadores para las alarmas ajustables y con una pantalla gráfica de punto matricial.

El controlador/transmisor **MicroChem™ 2 Serie 4000** puede ser configurado como un transmisor, como control de dosificación, como control en piscinas o control en fosas de aireación. Se pueden conectar hasta tres elementos de medición en cualquier combinación de cloro (libre y total), dióxido de cloro, fluor, ozono, pH, ORP, temperatura (PT100), con salida de 4·20 mA.

* La mediciones de amoníaco y nitrato están pendientes.

Monitores de Calidad de Aguas Potables y Servidas

Los monitores de calidad de agua **Aztec™ Serie 1000** emplean un electrodo selectivo de iones (ISE) y tecnología de colorimetría para medir aluminio, amoníaco, color, flúor, hierro, nitrato, nitrito, manganeso, fosfato o sílice en aguas potables o servidas. Los monitores se pueden configurar fácilmente, se auto calibran y se ajustan a los rangos automáticamente.

Los medidores de Oxígeno Disuelto (DO) y de Sólidos Suspendidos en Licores Mezclados (MLSS) **Aztec™ Serie 5000** son auto limpiantes y se auto calibran en forma automática. Un sistema de monitoreo basado en un receptáculo de aireación altamente automatizado, con un sistema de recolección de datos y comunicación remota, permite efectuar medias sencillas, dobles y combinadas.

Embotellado.

Usted suministra el agua.

Problemática:

Si usted es un empresario o el comerciante de bebidas número uno del planeta, todo lo que necesita poseer es una fuente de agua, un área adecuada y un profundo deseo de calmar la sed del público con agua potable de alta calidad. **Severn Trent** proveerá el resto.

Solución:

El campeón de pesos pesados de la industria de agua embotellada, **Severn Trent**, ha instalado sistemas para organizaciones industriales, gubernamentales y comerciales en más de 80 países, incluyendo marcas tan distinguidas como Coca Cola®, PepsiCo, Danone y Nestlé.

Existen dos características de calidad que mantienen nuestro éxito: Primero: ningún otro fabricante provee la completa línea de tecnología y accesorios de una sola vez. De principio a fin, de bandas transportadoras a tapadoras, desde cargadores hasta tanques de almacenaje, **Severn Trent** lo ofrece todo. Segundo: nuestra tecnología líder en el mercado fija los estándares para diseñar con excelencia y eficiencia. Los sistemas UAT WaterWorks™ y BabyWorks™ poseen lavadoras-llenadoras-tapadoras diseñadas especialmente para la industria del embotellado de agua. Esos sistemas representan lo máximo en tecnología y son el corazón de la operación de embotellado. Pueden pre-lavar, lavar, enjuagar, esterilizar, llenar y tapar botellones o garrafas de tres, cinco y seis galones (11.4, 18.9 y 22.7 litros) a velocidades de hasta 3.000 botellones o garrafas por hora.


SEVERN
TRENT
SERVICES
WATERWORKS
WATERWORKS
AI 730

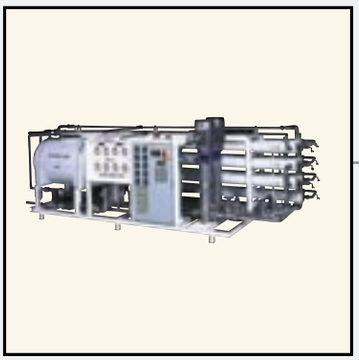

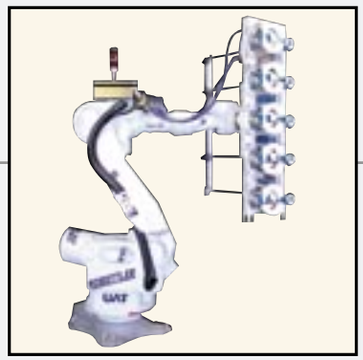

Embotellado.

Si Usted tiene necesidad de mejorar la calidad y eficiencia de su operación de embotellado de agua, o desea montar una nueva instalación partiendo de cero, **Severn Trent** posee una profunda experiencia y alta tecnología para ayudar a hacer esto posible en forma práctica.

Destapadores Automáticos

El **Destapador Automático** detecta las tapas en las botellas o garrafas de policarbonato que son retornadas. Una vez que se detecta, la botella se detiene y la tapa es removida y descargada a través de un conducto en un recipiente específico determinado por el cliente o en recipiente de basura. El destapador también se ajusta automáticamente para botellas de policarbonato de tres o cinco galones (11.4 o 18.9 litros) de cualquier altura.

Aplicadores Automáticos de Cintas Termoencogibles

La máquina **Aplicadora Automática de Sello** es controlada por un PLC, el cual presenta completamente paso a paso sus etapas. Esta máquina de fácil operación coloca en forma automática una cinta plástica o sello sobre la tapa de cada botella o garrafa, para sellar la tapa y garantizar el producto.

Sistemas de Embotellado

Los equipos **BabyWorks™** están diseñados para aquellos que se inician en las operaciones de embotellado, con capacidades de producción de 60, 200 o 300 botellas por hora, con lavado, esterilizado, enjuague, llenado y tapado automático de botellas de cinco galones (18.9 litros). Su tamaño compacto y de fácil operación permite que una persona dirija el proceso completo.

El corazón del concepto de embotellado del sistema **WaterWorks™**, es un sistema completamente automático que prelavará, lavará, esterilizará, enjuagará, llenará y tapará botellas de tres, cinco y seis galones (11.4, 18.9 y 22.7 litros) con velocidades de producción de hasta 3,000 botellas por hora. Desde su construcción de alta calidad en acero inoxidable y diseño seguro, bombas y tanques sobredimensionados, hasta juntas soldadas sin costuras y en cada unión, nuestro compromiso es proveer la mejor calidad y servicio.

Elevadores de Tapas

Utilizando aire comprimido, el **Hi-Kap** automáticamente eleva las tapas nuevas dentadas de cierre rápido hacia una tolva de alimentación, ahorrando tiempo y dinero. Las tapas de esta forma pueden ser cargadas fácilmente en la tolva de acero inoxidable.

Codificadoras de Inyección a Tinta y detección de olores

Las **Codificadoras de Inyección a Tinta** automáticamente imprimen un código de una o dos líneas en uno de los lados de las botellas ya llenas y tapadas. Severn Trent ofrece una línea completa de detección de olores, diseñados para detectar varios tipos de impurezas en las botellas, antes de iniciar el ciclo de lavado de las mismas.

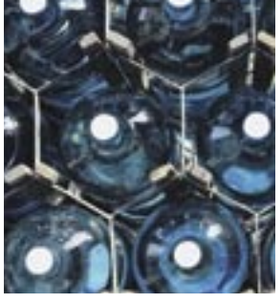

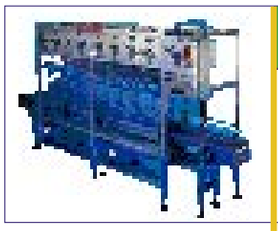

Probadoras de Fugas

Las **Probadoras de Fugas** son completamente automáticas y paran, inspeccionan y prueban todas las botellas vacías retornadas por posibles fugas, desechando en forma automática aquellas que presentan defectos, antes de iniciar el ciclo de lavado de las mismas.

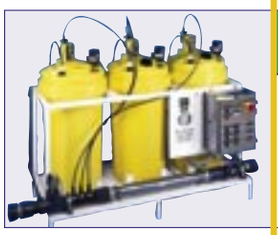

Sistemas para Inyección de Minerales

Los **Inyectores de Minerales** automáticamente agregan hasta tres diferentes minerales en el agua procesada. Los minerales a agregarse pueden ser potasio, calcio, magnesio, y flúor en cualquier combinación. Los sistemas de inyección están disponibles en combinaciones de uno, dos y tres tanques, los cuales incluyen bombas dosificadoras automáticas, mezcladores estáticos y medidores de sólidos disueltos totales (TDS) para monitorear el producto final.

Líneas Motorizadas para Transportar Garrafones

Las **Bandas Motorizadas Transportadoras** llevan las botellas automáticamente a través de las diferentes secciones del proceso de embotellado. Los componentes de las líneas transportadoras están construidas en acero inoxidable de alta calidad sanitaria, haciéndola más durable aún trabajando a toda su capacidad. Las líneas transportadoras pueden ser configuradas para operar desde el PLC en el panel de control del WaterWorks.

Sistemas de Esterilización con Ozono

Severn Trent ofrece los Sistemas para Esterilizar con Ozono, tanques de contacto, módulos y otros equipos opcionales, diseñados para proveer concentraciones de gas ozono disuelto de 0.02 a 0.4 ppm or mg/l. Todos los sistemas están construidos en acero inoxidable y se suministran en rangos de capacidad de producción desde 0.5 lbs/día a 8.4 lbs/día (0.23 kg/día hasta 3.8 kg/día) de gas ozono.

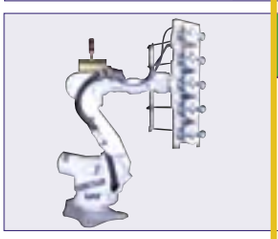

Cargadores / Descargadores de Estantes

Los **Robots Cargadores y Descargadores de Estantes** automáticamente llevan las botellas de policarbonato de tres y cinco galones (11.4 y 18.9 litros) desde los estantes industriales y después colocan las botellas llenas y tapadas de regreso en los mismos estantes. Están disponibles en distintos tamaños y velocidades.

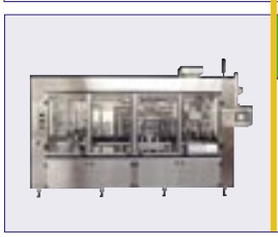

Equipos de Embotellado de Botellas Pequeñas Tipo PET

La **Serie PET** provee un amplio rango de equipos para el enjuague, llenado y tapado de botellas tipo PET, en rangos de 0.5 litros a 1 galón (3.7 litros). En un solo bloque, el enjuagador, llenador y tapador está diseñado para procesar botellas no retornables, con velocidades y rangos de operación de 30 a 440 botellas por minuto.

La ventaja de ser líder global.

Si Usted es distribuidor, representante o dueño de firma de consultoría o de ingeniería, en una ciudad pequeña o en una metrópolis, o si es comerciante o está iniciando un negocio en cualquier parte del mundo con un proyecto, una necesidad o un reto, cuente con que **Severn Trent Services** podrá ofrecerle el apoyo adecuado.

Severn Trent Services:

- Posee su oficina principal en el área de Philadelphia, en los Estados Unidos de América. Posee **90** oficinas alrededor del mundo, incluyendo Egipto, Italia, Malasia, México y el Reino Unido.

- Severn Trent Services es miembro del grupo de compañías de Severn Trent Plc (Londres: SVT.L) de Birmingham, Inglaterra; un líder internacional en servicios ambientales. Severn Trent es una de las 100 compañías FTES.

- Severn Trent Services opera globalmente y emplea cerca de **5.000** personas, con ventas anuales de US**$600** millones (**503** millones de EUR). Con más de **600** contratos en USA solamente, Severn Trent Services gerencia más contratos para clientes municipales, industriales y de aguas servidas que cualquier otro competidor en USA.

- Severn Trent Services no solo provee soluciones a purificación de aguas. También posee un amplio rango de soluciones con tecnologías y servicio, incluyendo análisis de tuberías, servicios de reparación y rehabilitación, servicios bajo contratos operacionales y avanzados servicios y productos para medición tipo residencial. A través de Severn Trent Laboratorios, ofrecemos servicios analíticos.

Las ventajas son tan claras, como las aguas transparentes que son nuestro objetivo. Para conseguir soluciones superiores de purificación de aguas, solamente existe una respuesta: **Severn Trent Services**.

SEVERN TRENT SERVICES

Corporate Headquarters

Suite 300

580 Virginia Drive

Fort Washington, PA 19034-2707

US Toll-free +1 866 646 9201

Telephone +1 215 646 9201

Fax +1 215 283 6138

Email info@severntrentservices.com

www.severntrentservices.com

CHINA
Beijing
Dalian

COLOMBIA
Bogotá

EGYPT
Cairo

ITALY
Milan

MALAYSIA
Kuala Lumpur

MEXICO
Cancun

UNITED KINGDOM
Didcot
Minworth

UNITED STATES
ARIZONA
Phoenix

CALIFORNIA
Campbell
Torrance

FLORIDA
Tampa

NEW HAMPSHIRE
Goffstown

PENNSYLVANIA
Colmar
Fort Washington H.Q.
Pittsburgh

TEXAS
Sugar Land